WESTRIDGE MARINE TERMINAL ENVIRONMENTAL AIR ASSESSMENT

WESTRIDGE MARINE TERMINAL UPGRADE AND EXPANSION PROJECT APPLICATION TO VANCOUVER FRASER PORT AUTHORITY

Trans Mountain Pipeline ULC
Kinder Morgan Canada Inc.
Suite 2700, 300 – 5 Avenue S.W.
Calgary, Alberta T2P 5J2
Ph: 403-514-6400

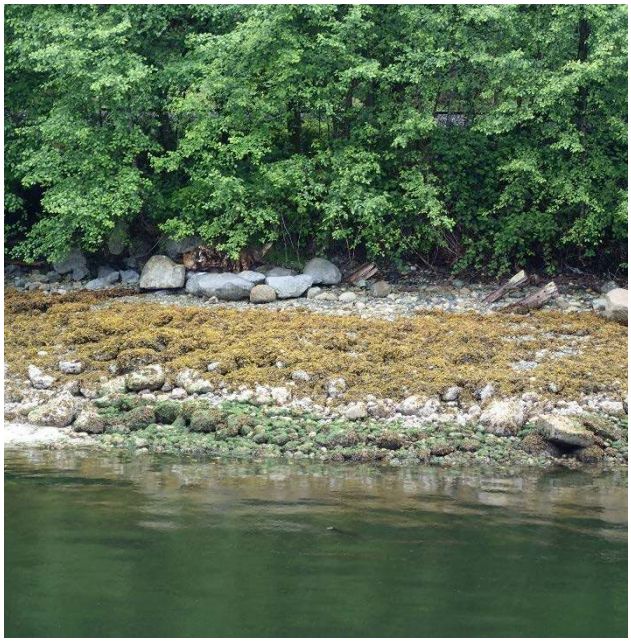

May 2017

Attachment 1: Condition 53 Compliance Filing

FUGITIVE EMISSIONS MANAGEMENT PLAN FOR WESTRIDGE MARINE TERMINAL TRANS MOUNTAIN PIPELINE ULC TRANS MOUNTAIN EXPANSION PROJECT NEB CONDITION 53

April 2017
REV 1
01-13283-TW-WT00-RWD-RPT-0001

Prepared for:

TRANSMOUNTAIN

Trans Mountain Pipeline ULC

Kinder Morgan Canada Inc.
Suite 2700, 300 – 5th Avenue S.W.
Calgary, Alberta T2P 5J2
Ph: 403-514-6400

Trans Mountain Expansion Project

Guide to the Environmental Plans

Environmental Plans
Volume 1 – Temporary Construction Lands and Infrastructure Environmental Protection Plan
Volume 2 – Pipeline Environmental Protection Plan
Volume 3 – Facilities Environmental Protection Plan
Volume 4 – Westridge Marine Terminal Environmental Protection Plan
Volume 5 – Reactivation Environmental Protection Plan
Volume 6 – Environmental Management Plans
Volume 7 – Resource-Specific Mitigation figures
Volume 8 – Environmental Alignment Sheets
Volume 9 – Burnaby Mountain Tunneling Environmental Protection Plan
Volume 10 – Power Lines Environmental Protection Plans

This plan forms part of Volume 6 and is located:

Volume 6 – Environmental Management Plans
Section 1 – Organizational Structure
Section 2 – Socio–Economic Management
Section 3 – Contaminated Sites and Waste Management
Section 4 – Geological and Groundwater Management
Section 5 – Vegetation Management
Section 6 – Wildlife Management Plans
Section 7 – Wetland Management
Section 8 – Aquatic Resource Management
Section 9 – Reclamation Plans
Section 10 – Facilities Management Plans
Section 11 – Burnaby Mountain Tunneling Management

TABLE OF CONCORDANCE

NEB Condition 53 is applicable to the following legal instrument: OC-064 (CPCN). The table below describes how this Plan addresses the Condition requirements applicable to Project activities.

LEGAL INSTRUMENT CONCORDANCE WITH NEB CONDITION 53: FUGITIVE EMISSIONS MANAGEMENT PLAN FOR WESTRIDGE MARINE TERMINAL

NEB Condition 53	OC-064 (CPCN)
Trans Mountain must file with the NEB for approval, at least 4 months prior to commencing construction, a Fugitive Emissions Management Plan for the Westridge Marine Terminal that includes: a) a description of the sources of the fugitive emissions that will be generated from the Westridge Marine Terminal during construction and operations;	Section 3 of this Plan
b) a description of the emission and odour controls that will be employed to reduce fugitive emissions during tanker loading and other sources identified in a);	Section 4 of this Plan
c) procedures for verifying, tracking, and reporting on: i) fugitive emissions during tanker loading;	Section 5.1.1 of this Plan
ii) volatile organic compound collection efficiency;	Section 5 of this Plan
iii) the vapour recovery unit's hydrogen sulphide and mercaptan removal efficiency, as well as its BTEX reduction efficiency; and	Section 5.1.3 of this Plan
iv) the vapour combustion unit's hydrogen sulphide and mercaptan; removal efficiency, as well as its combustion efficiency;	Section 5.1.4 of this Plan
d) procedures for identifying any leaks or equipment malfunctions during operation of the vapour recovery and vapour combustion units;	Section 6 of this Plan
e) methods for quantifying emissions of particulate matter and volatile organic compounds (with vapour recovery and vapour combustion units in operation);	Section 7 of this Plan
f) any additional mitigation measures that will be employed to further reduce fugitive emissions;	Section 8 of this Plan
g) a description of Trans Mountain's program for addressing complaints with respect to fugitive emissions, including a communication and notification plan; and	Section 9 of this Plan
h) a summary of its consultations with Appropriate Government Authorities. In its summary, Trans Mountain must provide a description and justification for how Trans Mountain has incorporated the results of its consultation, including any recommendations from those consulted, into the plan.	Section 2, Appendix A and Appendix B of this Plan

EXECUTIVE SUMMARY

The Fugitive Emissions Management Plan (FEMP or the Plan) for the Westridge Marine Terminal (WMT) was prepared to meet National Energy Board (NEB) Condition 53 regarding the Trans Mountain Expansion Project ("the Project" or "TMEP"). Trans Mountain Pipeline ULC (Trans Mountain) developed he FEMP has been developed following extensive consultation with Appropriate Government Authorities and stakeholders.

The purpose of this FEMP is to manage and reduce fugitive emissions from the construction and operations of the WMT. Some internationally accepted definitions of fugitive emissions include "those emissions which could not reasonably pass through a stack, chimney, vent, or other functionally equivalent opening" (US GPO 2016a) and as "intentional or unintentional release of gases from anthropogenic activities excluding the combustion of fuels" (IPCC 2006). Fugitive emissions from oil and gas activities may be attributed to equipment leaks, process venting, evaporation losses and disposal of waste gas streams (e.g., by venting or flaring). Fugitive dust emissions arise from "the mechanical disturbance of granular material exposed to the air" (US EPA 1995).

Fugitive emission sources during construction may include airborne dust from site preparation, storage soil piles and material handling, conveyor transferring, access/haul road construction, vehicle movement and various other civil/earthworks activities such as excavations for trenches, foundations and piling installation, as well as fugitive vapours from equipment refueling and evaporative losses from engines and fuel tanks. Fugitive emission sources during operations may include minute vapour losses of volatile organic compounds (VOCs) during product loading from the vessels, piping, the Vapour Recovery Units (VRUs) and the Vapour Combustion Unit (VCU), standing and working losses from the jet fuel storage tanks, and other potential equipment leaks.

Best management practices will be used to control fugitive emissions, including dust and odours, during construction. During tanker loading operations, two VRUs will capture, liquefy, and re-inject fugitive VOC vapours (one VRU will operate per tanker). Although planned to be used infrequently, the VCU will collect and destroy fugitive vapours when three tankers are being loaded simultaneously, when one VRU is out of service for maintenance and two tankers are being loaded simultaneously or when a product being loaded contains measured peak H_2S or mercaptan concentrations (as vapour) exceeding the design criteria of 4,500 ppm H_2S or 500 ppm mercaptans. Adsorption vessels will be used to remove reduced sulphurs, like H_2S, upstream of the VRUs and the VCU. Mercaptan adsorption vessels will be used downstream of the VRUs to remove mercaptans.

The following procedures will be followed to verify and quantify fugitive emissions at the WMT during operations:

- Tankers – During one 12-month period, four sampling surveys will be conducted (one per season) onboard randomly selected tankers during which time cargo tank covers and associated seals will be checked for leaks of total hydrocarbon or total VOCs. Annual fugitive emissions will be calculated based upon the actual operational data gathered through these surveys.

- Piping – Any piping fugitive emissions will be determined as part of the annual leak detection procedures.

- VRUs – Emissions testing of the inlet vapours upstream of the H_2S adsorption vessels and downstream of the VOC and mercaptan adsorption vessels (VRUs) will be conducted once to verify the reduction efficiencies for H_2S, mercaptans and VOCs. A continuous H_2S vent monitor will be installed downstream of each H_2S adsorption vessel (upstream of the VRUs) to detect breakthrough and inform the need for replacement of the adsorptive medium. Any VOCs in the VRU vent stacks will also be continuously monitored. Trans Mountain will assess the appropriate frequency of testing to ensure the system is operating within the designed specifications.

- VCU – To inform the need for VCU usage where the design criteria may be exceeded as noted above, continuous H_2S and methyl mercaptan monitors will be installed on each of the three vapour collection system (VCS) connection lines from the three berths. Annual combustion efficiency testing will be conducted to ensure the system is optimized.

The detailed stack testing surveys on the VRUs and VCU will involve continuous measurements of inlet and exhaust gases (VOCs, H_2S and mercaptans) following US Environmental Protection Agency (US EPA) methods. Quantification of the emissions from the WMT for reporting purposes (such as the National Pollutant Release Inventory [NPRI]) will be based on product-specific inlet concentrations, the total number of tankers loaded, tanker loading time period, US EPA TANKS model, removal (VRU) and destruction (VCU) efficiencies, and the results of the verification measurements.

Performance of the emission and odour control equipment (i.e., VRUs, VCU and H_2S/mercaptan vessels) and quantification of emissions will be determined through a combination of on-site surveys using infrared camera technology and measurements with a portable organic vapour analyzer. Preventative inspection and maintenance will ensure equipment operates as designed.

The overall objective of the design standards and procedures during operation of the WMT is to minimize and mitigate fugitive emissions. Construction procedures will have the goal to minimize fugitive emissions resulting from construction activities. Additional mitigation measures that could be implemented in response to abnormal ambient monitoring results, detected leaks or confirmed odour complaints by residents, or land users are also identified in this FEMP.

TABLE OF CONTENTS

LIST OF TABLES

LIST OF FIGURES

LIST OF APPENDICES

ACRONYMS

AEMP	Air Emissions Management Plan
BC	British Columbia
BTEX	Benzene, toluene, ethyl benzene and xylenes
ESA	Environmental and Socio-economic Assessment
FEMP	Fugitive Emissions Management Plan
H_2S	Hydrogen sulphide
ID	internal diameter
KI	Potassium iodide
KM	Kinder Morgan
KMC	Kinder Morgan Canada
mg	milligrams
NEB	National Energy Board
NPRI	National Pollutant Release Inventory
ppmv	parts per million by volume
TMEP	Trans Mountain Expansion Project
TVOC	Total Volatile Organic Compounds
US EPA	United States Environmental Protection Agency
VCS	vapour control system
VCU	Vapour Combustion Unit
VOC	Volatile Organic Compound
VRU	Vapour Recovery Unit
WMT	Westridge Marine Terminal

1.0 INTRODUCTION

The FEMP was prepared to meet the requirements of NEB Condition 53. The Plan was submitted to Appropriate Government Authorities, potentially affected Aboriginal groups, and public stakeholders on September 16, 2016 for a review and feedback period which concluded on December 16, 2016. Trans Mountain incorporated feedback into the final Plan and has provided its rationale for deciding not to include certain feedback in Appendix A.

Since the September 2016 release of the draft Plan, engineering design has continued to progress and there have been changes that are described in detail in the TMEP Fall 2016 Project Updates (www.transmountain.com/environmental-plans). No revisions to this Plan were required as a result of the design updates.

1.1 Project Description

Trans Mountain Pipeline ULC (Trans Mountain) filed its Facilities Application (the Application) with the NEB in December 2013. In developing its Application, Trans Mountain commenced an engagement and communications program, which involved extensive discussions with landowners and consultation with affected stakeholders. This program was intended to gather input from these groups into the Application and supporting Environmental and Socio-Economic Assessment (ESA), and to continue to assist Trans Mountain in the design and execution of the Project. Trans Mountain is also working with Appropriate Government Authorities to carry out the necessary reviews, studies and assessments required for the Project.

Some internationally accepted definitions of fugitive emissions include “those emissions which could not reasonably pass through a stack, chimney, vent, or other functionally equivalent opening” (US GPO 2016a) and as “intentional or unintentional release of gases from anthropogenic activities excluding the combustion of fuels” (IPCC 2006). Fugitive emissions from oil and gas activities may be attributed to equipment leaks, process venting, evaporation losses and disposal of waste gas streams (e.g., by venting or flaring). Fugitive dust emissions arise from “the mechanical disturbance of granular material exposed to the air” (US EPA 1995). Sources of fugitive dust include airborne dust from site preparation, storage soil piles and material handling, conveyor transferring, access/haul road construction, vehicle movement and various other civil/earthworks activities such as excavations for trenches, foundations and piling installation.

1.2 Objective

The objective of this FEMP is to identify and communicate mitigation measures to be implemented during construction and operations at the WMT which will minimize fugitive emissions. Fugitive emissions tracking, verification, quantification and reporting procedures are also provided.

1.3 Links to Other Trans Mountain Environmental Plans

Information from other management plans prepared for the Project that are related to fugitive emissions management for the WMT has been considered in this FEMP. The links between the FEMP and other Trans Mountain management plans are provided in Table 1.

TABLE 1
TRANS MOUNTAIN MANAGEMENT PLANS LINKED TO FEMP

Management/Protection Plan	Objectives or Mitigation Topics Contained in Plan Linked to the FEMP
Air Emissions Management Plan for Westridge Marine Terminal (Volume 6)	The purpose of this Plan is to manage air emissions due to construction and operation of the WMT.
Fugitive Emissions Management Plan for Sumas and Burnaby Terminals (Volume 6)	The purpose of this Plan is to manage fugitive emissions due to construction and operation of the Sumas and Burnaby Terminals.

1.4 Commitment Management

Trans Mountain made a number of commitments regarding the Project during the OH-001-2014 proceedings and engagement activities up to May 2016. Commitments were made to improve and optimize Project planning and mitigation measures. As Trans Mountain has consolidated its commitments into a Commitments Tracking Table in accordance with NEB Condition 6, the table of commitments in each plan has been removed.

The updated Commitments Tracking Table was filed with the NEB and is available on Trans Mountain's web site at www.transmountain.com. Trans Mountain continues to monitor and track compliance with its commitments and will update, post to its website and file with the NEB updated versions of the Commitments Tracking Table according to the timeframes outlined in NEB Condition 6. Commitments with specific relevance to this Plan have been considered and incorporated into this Plan.

1.5 Regulatory Guidance

This Plan was developed in consideration of the current regulatory policies and guidance. Air quality protection is regulated under a variety of legislation, including the provincial *Environmental Management Act* and *Greenhouse Gas Reduction Targets Act*. Other non-statutory guidance developed by governments and not-for-profit associations includes:

- Canadian Ambient Air Quality Standards (CCME 2012);
- MV Ambient Air Quality Objectives (MV 2015);
- British Columbia Air Quality Objectives and Standards (BC MOE 2015); and
- North American Emission Control Area requirements (IMO 2017).

2.0 CONSULTATION AND ENGAGEMENT

Consultation and engagement activities related to fugitive emissions from the WMT were completed between May 2012 and March 2017 with Appropriate Government Authorities. Opportunities to discuss the fugitive emissions from the WMT and identify issues or concerns were provided to public stakeholders through the Trans Mountain website, workshops, meetings and ongoing engagement activities during the reporting period. Appendix A includes a comprehensive record of these engagement activities, stakeholder feedback and Trans Mountain responses.

The draft Plan was released on September 16, 2016 for review and feedback. Feedback was requested by December 16, 2016, although additional Appropriate Government Authority feedback was considered up until March 3, 2017. Trans Mountain incorporated any feedback into the final Plan or has provided rationale for why input has not been included, as summarized in Appendix A.

Engineering design changes were issued in the TMEP Fall 2016 Project Update document (www.transmountain.com/environmental-plans) along with a request for feedback. All of the design updates have been reviewed, and no revisions to this Plan were required as a result of the design updates. All design updates as they relate to air quality are summarized in Appendix F of the Air Emissions Management Plan (AEMP) for WMT (NEB Condition 52).

3.0 FUGITIVE EMISSION SOURCES

Fugitive emission sources within the WMT will potentially emit dust during construction and volatile organic compounds (VOCs) during tanker loading operations.

Fugitive emission sources at the WMT during construction are expected to include:

- airborne dust from construction activities (e.g., site preparation, storage piles and material handling, conveyor transferring, access/haul road construction, vehicle movement); and
- fugitive vapours from equipment refueling and evaporative losses from engines and fuel tanks.

Fugitive VOC (including H_2S and mercaptans) emission sources within the WMT during operations are expected to include:

- fugitive vapours from loading of crude oil onto berthed tankers and barges loading of crude oil or unloading of jet fuel (note that the handling of jet fuel is not part of the Project);
- fugitive vapours from piping connecting tankers to emissions control equipment on the dock;
- emissions not recovered by the Vapour Recovery Units (VRUs) (fugitive vapours from tanker or barge loading not recovered by VRUs). Two VRUs will be installed as part of the Project;
- uncombusted emissions from the Vapour Combustion Unit (VCU) (fugitive vapours from tanker or barge loading not combusted by the VCU). The existing VCU will be replaced with a new VCU as part of the Project;
- standing losses from the jet fuel storage tanks;
- working losses from jet fuel storage tanks during filling and emptying; and
- potential component leaks

A diagram showing the proposed vapour control system at the WMT for crude oil loading is shown in Figure 1.

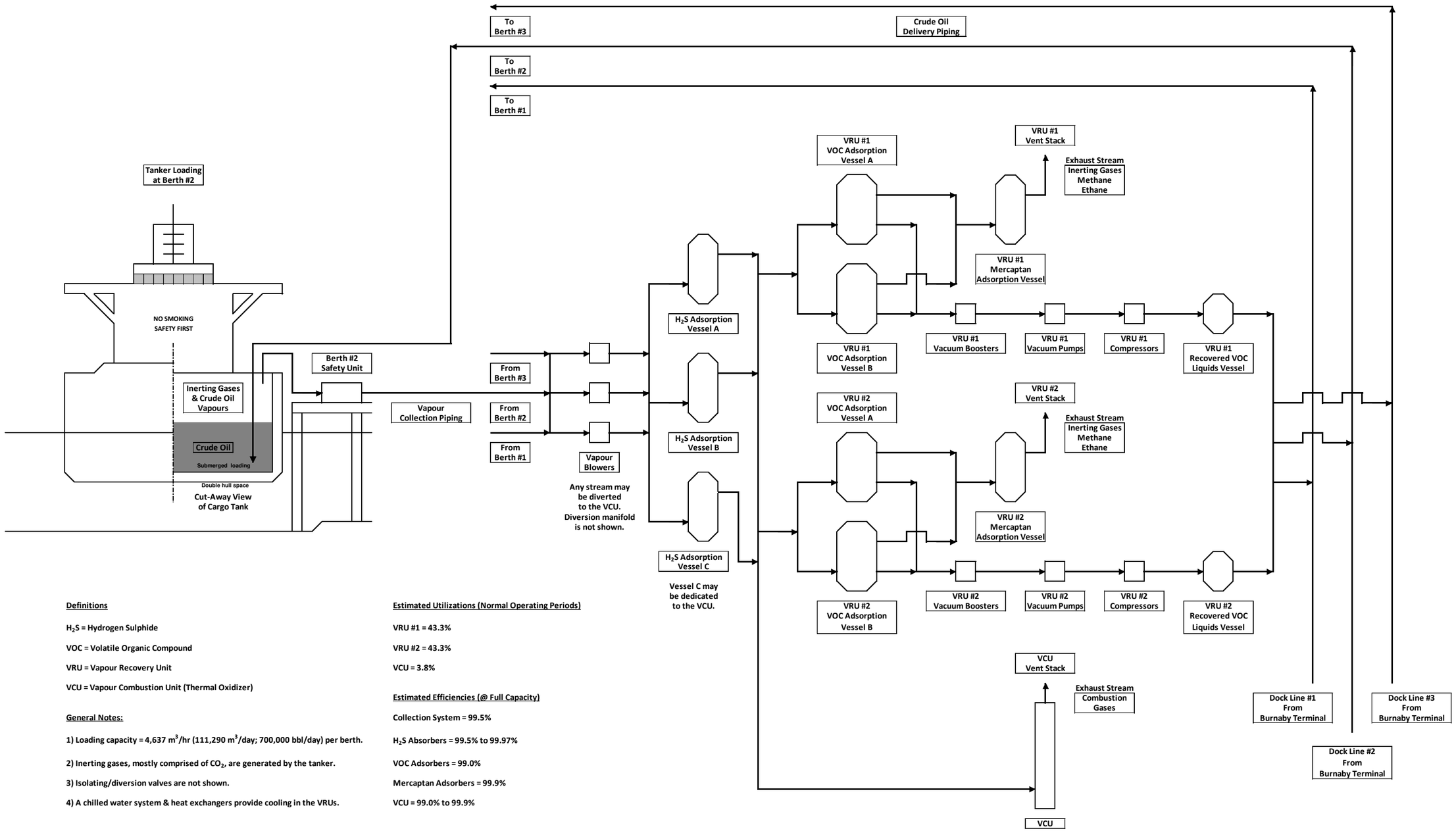

Definitions

H_2S = Hydrogen Sulphide

VOC = Volatile Organic Compound

VRU = Vapour Recovery Unit

VCU = Vapour Combustion Unit (Thermal Oxidizer)

General Notes:

1) Loading capacity = 4,637 m^3/hr (111,290 m^3/day; 700,000 bbl/day) per berth.

2) Inerting gases, mostly comprised of CO_2, are generated by the tanker.

3) Isolating/diversion valves are not shown.

4) A chilled water system & heat exchangers provide cooling in the VRUs.

Estimated Utilizations (Normal Operating Periods)

VRU #1 = 43.3%

VRU #2 = 43.3%

VCU = 3.8%

Estimated Efficiencies (@ Full Capacity)

Collection System = 99.5%

H_2S Absorbers = 99.5% to 99.97%

VOC Adsorbers = 99.0%

Mercaptan Adsorbers = 99.9%

VCU = 99.0% to 99.9%

FIGURE 1
SIMPLIFIED COMPONENT DIAGRAM FOR TANKER CLOSED LOADING WITH THE PROPOSED VAPOUR CONTROL SYSTEM AT WESTRIDGE MARINE TERMINAL

3.1 Fugitive Dust

Fugitive dust is expected to be the largest source of emissions from the WMT during construction. The potential sources of fugitive dust that were identified can be grouped into six main activities:

- site preparation;
- storage piles and material handling;
- conveyor transferring;
- access/haul roads;
- construction processes; and
- demolition and deconstruction.

Fugitive dust emissions are also discussed in the Particulate Matter Management Plan in the Air Emissions Management Plan (AEMP) for WMT (NEB Condition 52).

3.1.1 Site Preparation

Site preparation activities at the WMT include earthworks such as building additional construction accesses, soil stripping and clearing (i.e., tree cutting and grubbing), excavation, rough grading and modifying existing or creating new roads, as well as berm construction and site rehabilitation. These activities are expected to involve excavator, bulldozer and haul truck operations that have the potential to result in significant emissions of fugitive dust. There are various options for reducing potential emissions from these sources; those most applicable have been listed in Section 4.

3.1.2 Storage Piles and Materials Handling

Construction at the WMT will result in the need to stock-pile various materials such as cleared brush, stripped soil, excavated earth, other construction waste, as well as aggregates and other construction inputs. Dust particles on the surfaces of these piles may become entrained by the action of turbulent air currents during moderate to high wind speeds. Below this range, dust emissions of this type are expected to be minimal. In addition, handling and transferring of materials to and from piles could potentially result in dust emissions if not adequately controlled. There are a number of emission reduction practices applicable to fugitive dust emissions from storage piles, most of which involve reducing the exposure of storage piles to wind. The practices are listed in Section 4.

3.1.3 Conveyor Transfers

Construction at the WMT may involve conveyor transfers of various materials. Dust particles on the surfaces of these conveyor transfers may result in fugitive dust emissions. There are a number of emission reduction practices applicable to fugitive dust emissions from conveyor transfers, most of which involve full enclosure and ventilation through particulate matter control equipment. The practices are listed in Section 4.

3.1.4 Access/Haul Roads

Construction at the WMT will require the use of existing paved roads, gravel roads and trails, plus the construction of new temporary and permanent access roads. Dust emissions that result from vehicle and equipment travel on unpaved roads are expected; however, if diligently controlled, these emissions can be rendered minimal.

There may also be paved roads on site or off-site that act as access roads. Paved roads can accumulate mud, dust, and silt “track-out” that may eventually result in fugitive dust emissions. There are well-established dust reduction practices for road surfaces, which are listed in Section 4.

3.1.5 Construction Processes

Construction at the WMT will include processes such as cutting, grinding, welding, drilling and sand or grit blasting. The activities could result in fugitive dust emissions if not effectively managed. Applicable emissions reduction techniques for these sources are listed in Section 4.

3.1.6 Demolition and Deconstruction

Prior to or after various phases of construction at the WMT, parts or all of the existing utility dock and the existing tanker loading berth will be demolished. Demolition could involve material dropping and handling, as well as processes such as cutting and drilling, as described above. These activities have the potential to result in significant dust emissions; however, several emission reduction practices are provided in Section 4.

3.2 Fugitive Vapours from Fuel for Construction Equipment

Hydrocarbon fuels will be required to power equipment during construction. This equipment may range from hand tools to non-road vehicles. Equipment fuel may cause fugitive odour and VOC emissions on-site. The activities associated with fugitive fuel vapours include:

- on-site fuel delivery;
- dispensing fuel;
- potential fuel spills; and
- standing losses from fuel storage containers.

3.3 Fugitive Emissions from Loading Vessels

Fugitive emissions from loading vessels at the WMT with crude oil will comprise of organic vapours from cargo tanks that are displaced by the liquid cargo being loaded into the cargo tanks. These vapours are a composite of (1) vapours formed in the empty cargo tank by evaporation of residual liquid from previous loads, and (2) vapours generated in the cargo tank as the new liquid is being loaded (US EPA 2008). Inert gases, which were generated by systems on the tankers and inserted to the cargo tanks to prevent fire and explosion during discharge at the vessel's previous port will also be displaced from the cargo tanks by the liquid cargo being loaded.

3.3.1 Tankers and Barges

Trans Mountain does not own or operate tankers and barges; however, Trans Mountain carries out pre-screening of all vessels requesting to transfer oil at the WMT under its robust Tanker/Barge Acceptance Standard (the Standard). No vessel is accepted for loading unless it has been pre-screened and has then passed the Loading Master's inspection as part of the Standard. It is specified in the Standard that vessels must keep all cargo tanks under positive pressure with inert gas. By pre-screening all vessels, inspection prior to final acceptance and then, through spot checks and monitoring of the loading, the Loading Master ensures that the entire cargo and gas handling system is operated safely and optimally with no leaks of oil or gases.

The Standard requires all tankers and barges to be suitably certified under international Class and Flag state rules (Rules) to handle crude oil cargo and fitted with appropriate equipment and plans to contain and manage VOC gases during normal operations while underway, at anchor and at berth. The Rules for design of the cargo handling systems of these vessels include submerged loading, fitting of an inert gas system (IGS) and vapour collection system (VCS). The cargo tank venting systems onboard the vessels are fitted with suitable pressure valves, pressure gauges, pressure recorder and alarms and this helps ensure that under normal operations all gases emanating from the cargo are controlled within the cargo system and emissions to the atmosphere are avoided. The combined systems are maintained and operated according to the Rules. In addition, all tankers calling at the WMT are required to have undergone a prior inspection carried out under the Oil Companies International Marine Forum (OCIMF) Ship Inspection Report (SIRE) Programme. As such, in practical terms, given the locally benign climate and ocean conditions, the duration of time that vessels will spend within Burrard Inlet, and the stringent cargo management practices used onboard, normally or regularly occurring VOC emissions to the atmosphere are extremely unlikely.

All cargo loading takes place in a "closed" system using the cargo tanks being filled by the liquid oil through the submerged method with the gases created and displaced during loading being directed through the vessel's approved vapour manifold and piped to the WMT vapour recovery system. The submerged loading process minimizes vapour generation in the cargo tanks during loading.

Kinder Morgan Inc. (KM) previously tested three tankers loading at their facility in Galena Park, Texas, USA (which has a vapour collection system similar to the proposed WMT system) and demonstrated VOC collection efficiencies during loading of between 99.865% and 99.985% (ILTA 2014). This study, which is provided in Appendix D, noted that the AP-42 emission factors along with the default collection efficiency of 95% are outdated and unrealistic (US EPA 2008). In consideration of the measured data, a conservative collection efficiency of 99.5% was assumed for the WMT, resulting in up to 0.5% of fugitive emissions during vessel loading being discharged into the atmosphere. As noted in Section 2.5 of Supplemental Air Quality Technical Report No. 3 (Appendix F of the AEMP for WMT [NEB Condition 52]), the measured Levelton VOC emission factor of 547 mg per litre of oil loaded was used. This value is 5 to 8 times higher than the United States Environmental Protection Agency (US EPA) AP-42 values ranging from 73 to 120 mg per litre of oil loaded. Use of the Levelton VOC emission factor provides a conservative and robust estimate of VOC emissions relative to the AP-42 values. Since barges are also loaded through similar procedures as tankers, similar collection efficiency is expected for the barges.

3.3.2 Piping

The vapours emitted during tanker loading will be collected and piped to shore using the WMT vapour collection systems where the VOCs will either be recovered in the VRUs and/or incinerated in the VCU. It is possible that fugitive emissions from the flanges and other connections in the vapour collection piping system leading from the cargo tanks to the VRUs or VCU could occur. The WMT vapour collection system will be designed to minimize the number of flanges and connections. Based on the peak loading rate of 111,290 m^3/d (700,000 bbl/h) per vessel, an average capture efficiency of 99.9999% per vapour collection line was calculated. Fugitive emissions from piping systems were estimated using gas leak rates contained in industry reference documents, and were conservatively estimated at 40 flanges and connections per vapour collection line (Mannan 2005; US EPA 2005; US EPA 1996).

3.3.3 Vapour Recovery Units

Sulphur compounds and mercaptans, which have the potential to cause nuisance odours, cannot be effectively handled in the VRUs and will be separately removed before and after each VRU, respectively. The H_2S adsorption vessels will be located upstream of the VRUs and mercaptan adsorption vessels will be located downstream of the VRUs. The location of the H_2S and mercaptan adsorption units is specific to the process design of the VRUs. Due to the concentration of the H_2S/mercaptans and the inert atmosphere, the adsorption vessels will be filled with Addsorb VA12 potassium iodide (KI) impregnated carbon. This carbon was chosen because of its high capacity for H_2S conversion to elemental sulphur. The mercaptans convert to disulfides (also by oxidation) and then the disulfides are adsorbed onto the carbon.

The proposed collection and reduction efficiencies for collected vapours for the WMT VRUs, including the sulphur removal vessels, are summarized in Table 2.

TABLE 2
COLLECTION AND REDUCTION EFFICIENCIES FOR THE PROPOSED VRUS

Parameter	VRUs
Collection Efficiency	99.5%[1]
H_2S Removal Efficiency (through adsorption vessel upstream of the VRUs)	99.5%-99.97%[2]
Mercaptan Removal Efficiency (through adsorption vessel downstream of the VRUs)	99.9%[3]
VOCs Removal Efficiency	99.0%[4]
Benzene Removal Efficiency	99.0%[5]

Notes: [1] Uncollected vapours (0.5% fugitive emissions from tankers and 0.0001% fugitive emissions from connecting piping) are discussed in Sections 3.3.1 and 3.3.2, respectively.
[2] For inlet H_2S concentration of 200 ppmv and 4500 ppmv, respectively.
[3] For inlet methyl mercaptan concentration range of 50 ppmv to 500 ppmv.
[4] Based on mass emission rate of 2.4 mg VOC (excluding methane and ethane) vented per liter of product loaded (vapours vented from the VRU stack after collection and recovery by the VOC adsorption vessel). At vary low inlet concentration, i.e. beginning of the load, the 99% removal efficiency may not be met at this mass emission limit.
[5] Based on mass emission rate of 2.2 mg/Nm^3 vented (vapour volume vented can be assumed to be approximately equivalent to the inlet vapour volume).

3.3.4 Vapour Combustion Unit

The VCU will only be used during the following three situations:

1) when a product being loaded contains measured peak H_2S or mercaptan concentrations (as vapour) exceeding the design criteria of 4,500 ppm H_2S or 500 ppm mercaptans. These tend to be super heavy crude oils;
2) when three tankers are being loaded simultaneously; or,
3) when two tankers are being loaded simultaneously and one of the VRUs is out of service for maintenance.

These three situations are anticipated to occur less than 5% of the time. The H_2S adsorption vessels located upstream of the VRUs are also located upstream of the VCU. This will ensure that H_2S is removed prior to the combustion of the vapour stream and that the creation of sulphur dioxide (SO_2) (which would otherwise occur through the combustion of H_2S and other reduced sulphur species) is largely minimized. The collection efficiency and destruction efficiency for collected vapours for the VCU are summarized in Table 3. The VCU destruction efficiency for benzene, toluene, ethyl-benzene and xylenes (BTEX) is expected to be greater than 99%. In fact, a recent Trans Mountain study demonstrated that the existing VCU destruction efficiency is more than 99.99% for total VOCs (Levelton 2014).

TABLE 3
COLLECTION AND DESTRUCTION EFFICIENCIES FOR THE PROPOSED VCU

Parameter	VCU
Collection Efficiency	99.5%[1]
H_2S Removal Efficiency (through adsorption vessel upstream of the VCU)	99.5%-99.97%[2]
H_2S Combustion Efficiency	99% [3]
Mercaptan Combustion Efficiency	99.9%[4]
VOCs Destruction Efficiency	99.0%
Benzene Destruction Efficiency	99.0%

Notes: [1] Uncollected vapours (0.5% fugitive emissions from tankers and 0.0001% fugitive emissions from connecting piping) are discussed in Sections 3.3.1 and 3.3.2, respectively.
[2] For inlet H_2S concentration range of 200 ppmv to 4500 ppmv.
[3] H_2S combustion efficiency for the H_2S portion not being collected in the adsorption vessel.
[4] Mercaptans are not being collected in the VCU-destined vapour stream.

3.4 Jet Fuel Storage Tank Emissions

Fugitive emissions from the three existing jet fuel storage tanks consist of working and standing losses. Standing losses (also known as breathing losses) are caused by thermal expansion that occurs in the vapour headspace due to changes in meteorological conditions (predominantly ambient temperature and surface wind speed). Working losses (also known as withdrawal losses) for fixed roof tanks are due to the product vapours produced as a result of product clinging to the sides and fittings of the tank upon withdrawal and lowering of the liquid level and vapours would be present in the headspace above the liquid level (US EPA 2006a).

3.5 Other Potential Equipment Leaks

There are other potential sources of fugitive vapours, including equipment leaks. An ancillary list of equipment, and the associated standard operating procedures, is provided in the Westridge Terminal Operating Manual (the Manual). Equipment maintenance practices are provided and form part of the weekly, monthly and annual inspections. The Manual will be updated to reflect the new equipment being installed as part of the Project at the WMT.

4.0 DUST AND ODOUR EMISSION CONTROLS

Table 4 summarizes the dust and odour emission controls that will be employed to reduce fugitive emissions from construction, as identified in Section 3. The procedures and best practices for mitigating fugitive dust from construction operations are reproduced from Section 7 of the AEMP for WMT (NEB Condition 52). These practices are primarily based on the document Best Practices for the Reduction of Air Emissions from Construction and Demolition Activities (Cheminfo 2005).

The potential for odour emissions exists when construction workers are delivering and dispensing fuel. Trans Mountain will follow the Procedure for the Storage and Handling of Fuel on Construction Sites outlined by the Ontario Civil Engineering Sector Labour-Management Health and Safety Committee (IHSA 2008). The procedures to properly handle and mitigate fugitive vapours from fuel on construction sites are reproduced in Table 4 for easy reference.

TABLE 4
DUST AND ODOUR EMISSION CONTROLS FOR FUGITIVE EMISSION SOURCES DURING TERMINAL CONSTRUCTION (CHEMINFO 2005; IHSA 2008)

Emission Source	Activity / Emission / Odour Control
Airborne dust from construction activities	**Site Preparation** • Grade the construction site in phases; • Stabilize surfaces of completed earthworks with vegetation; and • Compact distributed soil. **Storage Piles and Material Handling** • Schedule deliveries to minimize the length of time soil piles are present; • Use tarps or other acceptable means of retaining soils on stock piles; • Maintain a suitable moisture content/dust suppression on roads and on surface material for handling; • Avoid creating steep faces on soil piles; • When practical, conduct loading/unloading activities on the downwind side of the pile; and • Minimize drop heights and transfer points whenever practical. **Conveyor Transfers** • Where feasible, transfer points and conveyor belts shall be fully enclosed; • Where feasible, for fully enclosed transfer points and conveyor belts, ventilation through particulate matter control equipment (i.e., cyclone, baghouse or similar control device) must be provided at all times when the conveyors are in operation; • Where feasible, the distance between material transfer points shall be minimized; • Where feasible, conveyor belts shall be equipped with belt wipers to keep the conveyor belt surfaces clean; and • Where feasible, the ground under conveyors and transfer points shall be regularly cleaned to remove any accumulations of fine particulate matter. **Road Surfaces** • Regular wet cleaning of construction sites and access roads to remove construction-caused debris and dust; • Dust suppression on unpaved haul roads and other traffic areas susceptible to dust using water; • Wet cleaning of paved streets/roads where tracking of soil, mud or dust has occurred once per day; • Tire washes and other methods to prevent trucks and other vehicles from tracking soil, mud or dust onto paved streets or roads; and • Implement vehicle restrictions that limit the speed, weight or number of vehicles on the road. **Construction Processes** • Apply water sprays in conjunction with cutting operations; • Use diamond bladed floor saws with water pumped through the system when cutting roadways, pavements, or blocks; and • Whenever practical, conduct cutting, grinding, drilling, sand or grit blasting in enclosures or partial enclosures. **Demolition and Deconstruction** • Whenever practical, apply deconstruction techniques rather than demolition; and • Minimize drop height for debris.
Fugitive vapours from dispensing fuel	• Replace fuel caps immediately after equipment refueling (on fuel tank and storage container); • All dispensing or transferring of fuel will be attended for the duration of the operation. The attendant must be aware of proper fuel handling procedures to minimize the risk of a spill and shall continuously scan the area adjacent to the fuelling operation for possible leaks or spills; • Delivery may be into on-site mobile refueling tanks or directly into the equipment; • On site fueling will be done with on-site single axle or tandem axle fuel trucks (not on highway). In some cases, on site fueling may be completed by a pick-up truck with a tidy tank in the back; • Fuel trucks shall be operated by a competent person; • The transferring and dispensing of fuel will be done with pumping equipment, an approved hose, and top-fill nozzle;

Emission Source	Activity / Emission / Odour Control
	• Ensure that a site-appropriate spill containment kit is readily available; • When unreeling the fuel transfer hose and nozzle, the nozzle must be in the upright position. The nozzle shall be kept clear of the ground when returned to the reel or storage position; • Verify that there is a proper connection between the fuel fill hose and the fill pipe of the highway tank, mobile refueling tank, or the equipment being filled. Verify that the fill valve is open; • The transfer of fuel must be stopped prior to overflowing, leaving room for expansion. Mobile refueling tanks and fuel tanks on vehicles and equipment are not to be overfilled; and • Maintain regular inspections of fuel systems and their components. Check for leakage, deterioration, or damage.
Potential fuel spills	• Appropriate spill response equipment will be available for all phases of the project area; and • Spilled material is to be cleaned up promptly to limit the release of fugitive emissions.
Fugitive vapours from storing fuels (standing losses)	• All fuels shall be enclosed in standard containers to contain fugitive emissions. The enclosures must also be inspected regularly and repaired as required to minimize potential emissions; • Where the circumstances require, fuel may be stored in an approved mobile refueling tank; • Mobile fuelling tanks must be stored in an area where it cannot be hit by vehicles or other equipment; and • All highway tanks and mobile refueling tanks are to be properly labelled in accordance with the Transportation of Dangerous Goods Regulation.

Table 5 summarizes the emission and odour controls that will be employed to reduce fugitive emissions during terminal operations as identified in Section 3. Details regarding leak detection procedures are provided in Section 6.

TABLE 5
EMISSION AND ODOUR CONTROLS FOR FUGITIVE EMISSION SOURCES DURING TERMINAL OPERATIONS

Emission Source	Emission / Odour Control
Fugitive VOC vapours from vessel loading	• Ensuring that only vessels that meet the criteria of KMC's Tanker/Barge Acceptance Standard are allowed to load at the WMT under supervision of a KMC appointed Loading Master. • VRUs to capture, liquefy, and re-inject fugitive vapours during loading (two VRUs – one will operate per tanker being loaded); • VCU to collect and destroy fugitive vapours during loading (used when three tankers are at berth, or when one of the VRUs are out of service for maintenance, or when a product being loaded contains measured peak H_2S or mercaptan concentrations (as vapour) exceeding the design criteria of 4,500 ppm H_2S or 500 ppm mercaptans); • Common header system for the VRUs and VCU to create a homogeneous fugitive vapour composition feeding to the VRUs and VCU if more than one tanker is being loaded; and • Closed-system connection between tanker cargo tanks and VRU or VCU.
Fugitive odorous sulphur compounds in vapours from vessel loading	• H_2S adsorption vessels to capture sulphur before directing the vapour stream to the VRUs or VCU; and • Adsorption vessels downstream of VRUs to remove mercaptans. Mercaptans directed to the VCU to be destroyed by combustion.
Working losses from jet fuel storage tanks	• Detected leaks will be promptly assessed and components found to be leaking materially significant quantities of vapour will be repaired as soon as reasonably practical.
Potential equipment leaks (non-storage tank equipment)	• Daily, weekly, monthly and annual duties required by the Field Technician, as outlined in the *Westridge Terminal Operating Manual*. This preventative maintenance is intended to identify and prevent potential leaks before they happen; • Fugitive VOCs from leaking components (other than VRUs, VCU and the liquid storage tanks) will be assessed using an infrared camera and measured/quantified using a portable organic vapour analyzer; and • Detected leaks will be promptly assessed and components found to be leaking materially significant quantities of vapour will be repaired as soon as reasonably practical.

5.0 VERIFICATION PROCEDURES

Section 5 details steps to address emissions verification. Section 6 covers tracking of emissions via leak detection procedures and Section 7 summarizes reporting of emissions and how they will be quantified.

5.1 Fugitive Emissions from Tanker Loading

5.1.1 Tankers

As discussed in Section 3.3.1, Trans Mountain adopted a VOC collection efficiency of 99.5% during tanker loading (Filing ID A4W6L8). To validate this assumption, Trans Mountain agreed to undertake sampling surveys onboard randomly selected vessels at the WMT, subject to receiving permission from the vessel, during which time the closed cargo and vapour containment system will be checked for leaks of total hydrocarbon (THC) or total volatile organic compounds (TVOC) measurements using a real-time portable monitor. The measurement of fugitive emissions is neither required nor regulated by Transport Canada and will require the permission and cooperation of the vessels that call WMT but are not controlled by Trans Mountain. These tests will check system components such as cargo tank covers and associated seals, flanges, pressure relief valves, etc. and will be carried out by a competent organization with experience in undertaking such tests. Prior to TMEP going into-service four sampling surveys shall be completed over a one year period (one survey per season). Should these tests identify any components within the system that are prone to leaks, the Loading Master shall ensure that those components are routinely checked during pre-start of loading and throughout the loading.

The leak detection methods for these surveys will be based on US EPA Method 21 using a Flame Ionization Detector or a Photo Ionization Detector. A high flow sampler will be used to measure the leak concentration.

To help increase knowledge of regulators and stakeholders about emissions from tankers at anchor and in transit and barges during loading, Trans Mountain will try to voluntarily extend, if feasible to do so, two fugitive emission VOC surveys to tankers upon their arrival at berth or anchor, and also carry out one fugitive VOC survey of a barge at berth during loading.

5.1.2 Piping

Any piping fugitive emissions will be determined following leak detection procedures provided in Section 6.

5.1.3 Vapour Recovery Units

5.1.3.1 Verification Testing

The final verification procedures will be conducted as required to report all parameters and this section of the FEMP may be subject to changes as the design progresses. The proposed emission testing methods are expected to be complex and should be considered to be preliminary and may be subject to change. The emissions testing contractor will develop a sampling protocol or pre-test plan in advance of the survey for acceptance by Trans Mountain before proceeding. To facilitate these source testing surveys, Trans Mountain will install two 50 mm (two inch) internal diameter (ID) flanged ports offset by 90 degrees, both located about 60 cm (two feet) below the VRU stacks exit.

Reduction efficiencies will be determined by a source testing survey for H_2S, mercaptans and VOCs as follows:

- flow rate (based on US EPA Method 2);
- dilution probe for continuous measurements on the inlet flow port to the H_2S adsorption vessels;
- continuous measurement of total hydrocarbons or VOCs (based on US EPA Method 25B) or equivalent;
- semi-continuous measurement (15-minute cycle) of H_2S concentrations (based on US EPA Method 15); and
- continuous measurement of mercaptans, in terms of total reduced sulphur or TRS (based on modified US EPA Method 16C). As well, canisters of gas samples will be taken for analysis of the individual mercaptan species by an independent laboratory.

For VOCs, continuous monitoring will be conducted upstream of the H_2S adsorption vessels and within the VRU vent stacks for each VRU during the full loading cycles of two different types of crude oil. Three 1-hour periods that are representative of the vapour release profile during tanker loading will be used to verify the VOC removal efficiency. Canister samples of VOCs will be taken in triplicate on the inlet and exhaust gas streams, both midway and in the last two hours of tanker loading. The samples will be analyzed to determine the speciated VOCs.

For H_2S, semi-continuous monitoring (i.e., the gas chromatograph will auto-inject a sample every 15 minutes and the unit will be calibrated every 3 hours) will be conducted upstream of the H_2S adsorption vessels and within the VRU vent stacks during the full loading cycles of two different types of crude oil. Three 1-hour periods that are representative of the vapour release profile during tanker loading will be used to verify the H_2S removal efficiency. The H_2S removal efficiencies are expressed in terms of the mass emission rates as shown in the notes under Table 2 (footnote [4]).

For mercaptans, measured as TRS and expressed as methyl mercaptan, continuous monitoring will be conducted upstream of the H_2S adsorption vessels and within the VRU vent stacks for each VRU (the VRU vent stacks to atmosphere are downstream of the mercaptan vessels) during the full loading cycles of two different types of crude oil. Three 1-hour periods that are representative of the vapour release profile during loading will be used to verify the TRS removal efficiency. Simultaneous sampling of the inlet and VRU exhaust gas streams will be conducted mid-way and in the last two hours of tanker loading. These samples will be taken in triplicate using SilcoCan canisters and will be analyzed by an independent laboratory. The H_2S vent monitors on the H_2S adsorption vessels will detect breakthrough and inform the need for replacement of the media. Any VOCs in the VRU vent stacks will also be monitored and continuously recorded.

5.1.3.2 Continuous Performance Monitoring

Based on US EPA requirements and best practices, VOC concentrations from VRUs will be monitored continuously to demonstrate compliance with the vent mass emissions limits (as shown in Table 2, footnote [4]). Trans Mountain proposes to use a non-dispersive infrared (NDIR) gas analyzer with three channel output including non-methane hydrocarbons, methane and total hydrocarbons or equivalent technology. Trans Mountain also proposes to continuously measure H_2S and methyl mercaptan concentrations using electro-chemical or catalytic detection. The VOC emissions will be monitored during a source test and used to set the limits on the allowable vent concentration required to meet the stated removal efficiencies (US GPO 2015).

To inform the need for VCU usage, continuous H_2S and methyl mercaptan monitors will be installed on each of the three VCS connection lines from the three berths. When a product being loaded contains measured peak H_2S or mercaptan concentrations (as vapour) exceeding the design criteria of 4,500 ppm H_2S or 500 ppm mercaptans, it will be directed to the VCU. The monitors will rely upon electro-chemical or catalytic detection.

5.1.3.3 Additional Testing

When the VRU design details are finalized, Trans Mountain will assess the appropriate frequency of testing to ensure the system is operating within the designed specifications. Any testing surveys will be in line with industry best practices and changes in the scope of the testing may vary from the emissions testing survey outlined above.

5.1.4 Vapour Combustion Unit

5.1.4.1 Verification Testing

The final verification procedures will be conducted as required to report all parameters and this section of the FEMP may be subject to changes as the design progresses. The proposed emission testing methods are expected to be complex and should be considered as preliminary and may be subject to change. The

emissions testing contractor will develop a sampling protocol or pre-test plan in advance of the survey for acceptance by Trans Mountain before proceeding. To facilitate this source testing survey, Trans Mountain will install two 50 mm (two inch) ID flanged ports, offset by 90 degrees, both located about 60 cm (two feet) below the VCU exit point.

Trans Mountain conducted a comprehensive study on the existing VCU to learn how the operating temperature of the unit affected combustion efficiency (Levelton 2014). The results of this study were incorporated into revision of the detail in the standard procedures for operating the existing VCU.

For the proposed VCU, the scope of work will include testing the inlet and exhaust gas streams for the following parameters:

- continuous measurement of the variable flow rate (modified US EPA Method 2);
- carbon dioxide (CO_2) and oxygen (O_2) (based on US EPA Method 3);
- moisture (based on US EPA Method 4);
- dilution probe for continuous measurements on the inlet flow port to the H_2S adsorption vessels;
- continuous measurement of total hydrocarbons or VOCs (based on US EPA Method 25B) or equivalent;
- semi-continuous measurement (15-minute cycle) of H_2S concentration (based on US EPA Method 15); and
- continuous measurement of mercaptans, in terms of total reduced sulphur or TRS (based on modified US EPA Method 16C).

For VOCs, the continuous monitoring will be conducted upstream of the H_2S adsorption vessels and inside the VCU exhaust stack during the full loading cycles of one super heavy crude oil. Three 1-hour periods that are representative of the vapour release profile during tanker loading will be used to verify the VOC destruction efficiency. Canister samples of VOCs will be taken in triplicate on the inlet and exhaust gas streams, both midway and in the last two hours of tanker loading. The samples will be analyzed to determine the speciated VOCs.

For H_2S, semi-continuous monitoring (i.e., the gas chromatograph will auto-inject a sample every 15 minutes and the unit will be calibrated every 3 hours) will be conducted upstream of the H_2S adsorption vessels and inside the VCU exhaust stack during the full loading cycles of two different types of crude oil. Three 1-hour periods that are representative of the vapour release profile during tanker loading will be used to verify the H_2S destruction efficiency.

For mercaptans, measured as TRS and expressed as methyl mercaptan, continuous monitoring will be conducted upstream of the H_2S adsorption beds and inside the VCU vent stack during the full loading cycles of two different types of crude oil. Three 1-hour periods that are representative of the vapour release profile during tanker loading will be used to verify the TRS destruction efficiency.

5.1.4.2 Continuous Performance Monitoring

Based on US EPA requirements and best practices, the VCU temperature will be monitored continuously to demonstrate compliance with the destruction efficiency (as shown in Table 3). Temperature will be monitored during a source test and used to set the limits on the allowable temperature required to meet the stated destruction efficiency (US GPO 2015).

To inform the need for VCU usage, continuous H_2S and methyl mercaptan monitors will be installed on each of the three VCS connection lines from the three berths. When a product being loaded contains measured peak H_2S or mercaptan concentrations (as vapour) exceeding the design criteria of 4,500 ppm H_2S or 500 ppm mercaptans, it will be directed to the VCU. The monitors will rely upon electro-chemical or catalytic detection

5.1.4.3 Additional Testing

Trans Mountain will continue to undertake annual combustion efficiency testing for the existing and proposed VCUs to ensure the systems are optimized. The scope of future testing on the proposed VCU may vary from the detailed survey proposed above.

5.2 Jet Fuel Storage Tank Emissions

Jet fuel storage tank emission as discussed in Section 3 will be quantified through the use of the US EPA TANKS emission software (US EPA 2006b) based on actual stored products and annual throughput.

6.0 LEAK DETECTION PROCEDURES

The following leak detection procedures will be followed:

- WMT will be designed and constructed with careful attention given to the need to prevent any leaks of crude oil and crude oil vapours. The VRUs and VCU will be supplied by an internationally recognized designer and manufacturer of these types of specialized equipment;
- WMT will be staffed by trained supervisors and crews at all times during tanker loading;
- A gas monitoring network, including hydrocarbon detectors on the VRUs and reduced sulphur compound (RSC) detectors around the site, will be installed, for early detection of any leaks or equipment malfunction. The detection equipment will be integrated with the WMT control system to allow for continuous measurement of the performance of the VRUs and VCU to ensure that they are operating efficiently and effectively; and
- WMT will be subject to regular inspections and scheduled maintenance to ensure the integrity of the system.

The vessels have gas monitoring networks onboard that are subject to regular inspection and scheduled maintenance to ensure the integrity of the system. The VCS also has gas content meters and alarms. During loading the vessel staff who comprise of trained supervisors and crews, as well as the Loading Master, will carry out rounds and check the system for leaks. The passing of gases through narrow apertures like leaks can typically be detected by the accompanied hissing sound and smell. Furthermore, the portable gas monitors carried by the crew will alarm if unacceptable atmospheric concentrations are encountered on deck or in enclosed spaces.

The VCU system contains automated sensors and self-check mechanisms that provide information to the control room operating system which can detect any abnormal pressures or oxygen levels that could be indicative of a leak. Any sensors or ancillary equipment in the VCU system will be serviced and calibrated as outlined by manufacturer requirements. There is no formal documented leak detection program for the VCU; however, Trans Mountain employs a preventative maintenance program that automatically generates work orders to inspect or maintain the equipment. In the past five years, preventative maintenance programs for the currently installed equipment have identified and promptly addressed leaks in flanges, seals and the need for electrical services, sensor replacements, cleaning of the flame arrestor elements and other minor maintenance activities.

Fugitive VOCs from leaking components (other than VRUs, VCU and the liquid storage tanks) will be assessed using an infrared camera and measured/quantified using a portable organic vapour analyzer. The US EPA defines a leak as 500 ppmv or 10,000 ppmv (depending on the type of valve or device), for organic compounds, as determined by 40 CFR, 60 Subpart VV (US GPO 2016b). The detection and measurement procedure will follow the following processes:

- all components at these facilities will be scanned annually with an infrared camera to detect any VOC leaks;
- in the event that a leak is identified, the source of the leak will be quantified with a portable organic vapour analyzer, and marked with the leaker tags; and
- in the rare cases that components are found to be leaking materially significant quantities of vapour, they will be repaired as soon as reasonably practical.

7.0 EMISSION QUANTIFICATION METHODS

Emissions are currently estimated as reported for the National Pollutant Release Inventory (NPRI) for the WMT on an annual basis. Both fugitive and point source emissions must be calculated and reported if reporting thresholds are exceeded.

7.1 Fugitive Emissions

As noted in Section 5.1.1 Trans Mountain will undertake four surveys onboard randomly sampled tankers at the WMT over one year (one survey per season) for leaks of real-time THCs or TVOCs. Based upon the survey results for measured VOCs from these tests the annual fugitive VOCs from tankers can be calculated based upon the total number of tankers loaded per year and loading time per tanker.

Annual fugitive VOC emissions from vapour piping systems will be calculated using gas leak rates contained in industry reference documents and actual number of flanges and connections.

7.2 Vapour Control System Emissions

Estimating the small remaining amounts of VOC emissions that are neither collected nor controlled can be derived using the following methods:

- annual VOC emission rates from the two VRUs based on continuous emission monitoring results as described in Section 5.1.3;
- annual VOC emission rates from the VCU based on survey results as described in Section 5.1.4 and total number of vessels loaded per year and loading time per vessel when the VCU was operating; and
- VOC emission rates for VRUs and VCU, provided by Trans Mountain's emissions control technology provider based on headspace analyses performed for multiple products, will be used in conjunction with the methods above or for cross-checking the calculated results.

Calculation of the annual point source emissions from the VRUs will be based on the number of hours per year that the VRUs operate and use of VOC and benzene mass emission limits provided by Trans Mountain's emissions control technology provider. H_2S and mercaptan mass emissions will be calculated based on product specific inlet concentrations and removal efficiencies as discussed in Section 3.3.3 and verified during the source testing as summarized in Section 5.1.3.

Calculation of the annual uncontrolled VOCs (including H_2S, mercaptans and BTEX) not destroyed by the VCU will be based on the following:

- average product loading rates (liter/hour);
- total annual loading time when VCU operates;
- previously measured VOC emission factors reported by Levelton (2014); and
- destruction efficiency verified during the source testing.

Mass emissions of BTEX, H_2S and mercaptans from the VCU will be calculated based on product specific inlet concentrations and destruction efficiencies as discussed in Section 3.3.4 and verified during the source testing as discussed in Section 5.1.4.

7.3 Storage Tank Emissions

Storage tank emissions will be calculated using the US EPA TANKS emission software (US EPA 2006b).

8.0 ADDITIONAL MITIGATION MEASURES

The existing WMT operations already complies with applicable regulations for controlling and managing fugitive emissions from its current operations.

Trans Mountain is designing the WMT to minimize and mitigate fugitive emissions during operations and for this purpose has committed to implementing equipment and standard operating procedures that exceed industry best practices in the absence of regulations. As well, during construction all feasible efforts will be made to minimize and mitigate fugitive emissions.

Trans Mountain's Odour Complaint Investigation and Response Program outlines the ambient air and meteorological measurements and tank activity information that are collected for each odour complaint and retained for trending analyses. During the operation of the WMT, the data will be analyzed to identify specific products that may be causing recurring odours. If necessary, further mitigation measures will then be investigated and potentially implemented to reduce the occurrence of odours. Measured elevated levels of odourous compounds will be investigated even when no complaint is filed.

If any exceedances of the BC or Alberta Ambient Air Quality Objectives are noted by future air quality monitoring, the results will be analyzed to determine the source of the exceedance as well as the frequency of exceedance. If the exceedance is determined to be due to emissions from the WMT, appropriate additional mitigation measures will be put in place. More details about appropriate mitigation and the air quality monitoring are provided in the AEMP for WMT (NEB Condition 52).

The additional mitigation measures that could be implemented, if deemed appropriate, in response to ambient monitoring results, routine leak detection procedures, or confirmed odour concerns raised by residents, land users, and Aboriginal groups could be comprised of one or a combination of the following:

- repairing leaks as soon as reasonably practical;
- allocating highly odorous vapour streams to VCU;
- adjusting sequence of tanker loadings to reduce peak VOC generation rates;
- temporarily limiting or suspending the loading of highly odourous crude oils; and
- loading crude oil at lower flow rates.

9.0 COMPLAINT PROCESS

KMC's program for addressing public complaints with respect to fugitive emissions during operations is explained in Section 4.2 Odour Complaint Investigation and Response Procedure of the KMC Environment Manual (Appendix C).

The complaints process for construction is outlined in Section 4.12 of the AEMP for WMT (NEB Condition 52)

10.0 SUMMARY

In summary, the FEMP for WMT provides mitigation and planning measures for managing fugitive emissions during construction and operation of the WMT. Mitigation measures for fugitive dust are provided in the AEMP for WMT (NEB Condition 52). Fugitive vapours from fuel handling and storage tanks will be controlled using best management practices.

Performance of the emission and odour control equipment will be measured through on-site scans using infrared camera technology, and leak concentrations will be measured using portable organic vapour analyzers and leaks will be quantified using high flow samplers. The emissions will be controlled through the strict on-site maintenance and repair programs and automated system checks. Preventative inspection and maintenance will limit the potential for leaks from equipment and piping. In the rare cases that components are found to be leaking materially significant quantities of vapour, they will be repaired as soon as reasonably practical depending on parts, accessibility, safety and equipment downtime.

Verification of the fugitive emissions from the WMT will involve direct measurements for leaks of cargo tank covers and associated seals on selected tankers in four surveys over a 12-month period (one per season) as a means to ensure the annual emissions inventory of the WMT when in-service is based upon real world values. To help increase knowledge of regulators and stakeholders about emissions from

tankers at anchor and in transit and barges during loading, Trans Mountain will try to voluntarily extend, if feasible to do so, two fugitive emission VOC surveys to tankers upon their arrival at berth or anchor, and also carry out one fugitive VOC survey of a barge at berth during loading.

Ongoing leak detection surveys of piping in support of maintenance, and detailed stack emission surveys of the VRUs and the VCU will also be conducted. The detailed stack testing surveys on the VRUs and VCU will involve continuous measurements of inlet and exhaust gases (VOCs, H_2S and mercaptans) following US EPA stack emission methods. Quantification of the emissions from the WMT for reporting purposes (such as NPRI) will be based on product specific inlet concentrations, the total number of tankers loaded, tanker loading time period, US EPA TANKS model, removal (VRU) and destruction (VCU) efficiencies, and the results of the verification measurements.

Several additional mitigation measures have been identified that could be implemented in response to any ambient monitoring results that exceed ambient air quality objectives, routine leak detection surveys or confirmed odour concerns raised by residents and land users.

11.0 REFERENCES

British Columbia Ministry of Environment (BC MOE). 2016. British Columbia Air Quality Objectives and Standards. Updated January 18, 2016.

Cheminfo Services Inc. and the Construction and Demolition Multi-stakeholder Working Group. 2005. Best Practices for the Reduction of Air Emissions From Construction and Demolition Activities. Prepared for Environment Canada, Trans-boundary Issues Branch. 58 pp.

Canadian Council of Ministers of the Environment (CCME). 2012. Guidance Document on Achievement Determination Canadian Ambient Air Quality Standards for Fine Particulate Matter and Ozone. PN 1483.

Infrastructure Health and Safety Association (IHSA). 2008. Procedure for the Storage and Handling of Fuel on Construction Sites. Available from: http://www.ihsa.ca/pdfs/research_docs/fuel_handling_procedure.pdf. Accessed on: December 2015.

Intergovernmental Panel on Climate Change (IPCC). 2006. Guidelines for National Greenhouse Gas Inventories. Volume 2, Chapter 4 Fugitive Emissions. Available at: http://www.ipcc-nggip.iges.or.jp/public/2006gl/pdf/2_Volume2/V2_4_Ch4_Fugitive_Emissions.pdf.

International Liquid Terminals Association (ILTA). 2014. Measurement of VOC Losses During Marine Vessel Loading: A Case Study. 34th Annual International Operating Conference & Trade Show. June 2-4, 2014. Presented by Brian Cochran (URS Corporation) and Shannon DiSorbo (Kinder Morgan/DiSorbo Consulting).

International Marine Organization (IMO). 2017. Prevention of Air Pollution from Ships MARPOL Annex VI. Available from: http://www.imo.org/en/OurWork/environment/pollutionprevention/airpollution/pages/air-pollution.aspx. Accessed on: March 13, 2017.

Levelton Consultants Ltd. 2014. Kinder Morgan Westridge Terminal Vapour Combustion Unit Study.

Mannan, S. (ed.). 2005. Lees' Loss Prevention in the Process Industries: Hazard Identification, Assessment and Control. Third edition. January 25, 2005.

Metro Vancouver. 2015. Metro Vancouver Ambient Air Quality Objectives. Available from: http://www.metrovancouver.org/services/air-quality/AirQualityPublications/CurrentAmbientAirQualityObjectives.pdf. Updated May 15, 2015.

United States Environmental Protection Agency (US EPA). 1995. AP-42, Fifth Edition, Section 13.2: Introduction to Fugitive Sources, January 1995.

US EPA. 1996. Methane Emissions from the Natural Gas Industry. EPA-600/R96-080b. June 1996.

US EPA. 2005. Protocol for Equipment Leak Emission Estimates. EPA 453/RE-95-017 November 1995.

US EPA. 2006a. AP-42, Fifth Edition, Section 7: Liquid Storage Tanks.

US EPA. 2006b. TANKS Emissions Estimation Software, Version 4.09D.

US EPA. 2008. AP-42, Fifth Edition, Section 5.2: Transportation and Marketing of Petroleum Liquids, July 2008.

United States Government Publishing Office (US GPO). 2015. Current as of December 31, 2015. Title 40 Code of Federal Regulation, Part 63 Subpart R, Subpart BBBBBB and Subpart Y).

US GPO. 2016a. Current as of January 11, 2016. Title 40 Code of Federal Regulation, Part 51 Subpart 166(b)(20).

US GPO. 2016b. Current as of January 12, 2016. Title 40 Code of Federal Regulation, Part 60 Subpart VV.

APPENDIX A
CONSULTATION AND ENGAGEMENT

Consultation and engagement activities related to the fugitive emissions from Westridge Marine Terminal (WMT) were completed with Appropriate Government Authorities. Opportunities to discuss the fugitive emissions from the WMT and identify issues or concerns were also provided to public stakeholders during meetings, workshops and ongoing engagement activities.

Consultation and engagement opportunities began in May 2012 with the Project announcement and are ongoing.

1.0 Consultation and Engagement Overview: Draft Plan Development

Reports on public consultation activities completed between May 2012 and June 30, 2015 were filed with the National Energy Board (NEB) and are available in the Application (Volume 3A: Stakeholder and Volume 3B: Aboriginal; Filing ID A55987) as well as in Consultation Update No. 1 and Errata, Technical Update No. 1 (Filing ID A59343) / Consultation Update 2 (Filing IDs A62087 and A62088), Consultation Update 3 (Filing IDs A4H1W2 through A4H1W8) and Consultation Update 4 (Filing ID A72224). These reports include results of consultation conducted to date, identification of issues and concerns as well as Trans Mountain's response and are included below. Where appropriate, Trans Mountain's response has been updated to reflect information developed since the original response was provided during the NEB proceeding for the Project.

Consultation and engagement activities completed between July 1, 2015 and March 2017 have not been filed on the public record with the NEB. Any new issues and concerns identified during this period, as well as Trans Mountain's response, are described below.

2.0 Consultation and Engagement Overview: Draft Plan

The draft Plan was released for review and feedback on September 16, 2016.The comment period closed on December 16, 2017, although additional Appropriate Government Authority feedback was considered up until March 3, 2017. Email or mail notification regarding the Plan was sent to 141 public stakeholders, 17 regulatory authorities, and all affected landowners. The notification included a summary description of the Plan, a request for review, the timing of the comment period and contact information. See Appendix B for a complete list of notified stakeholders.

In addition to direct notification, the online posting of each Plan was promoted through Trans Mountain's weekly e-newsletter, Trans Mountain Today, which provides Project updates, regulatory information, stories and interviews to more than 6,000 subscribers. Each week Trans Mountain Today included a focus on a specific plan, or group of plans, as well as a reminder of all plans available for review.

2016

- September 22 - Wildlife Mitigation and Habitat Restoration Plans
- September 29 - Pipeline Environmental Protection Plans
- October 6 - Air Quality Management Plans (including the FEMP)
- October 13 - Watercourse and Water Ecosystems Plans
- October 20 - Vegetation Management Plans
- October 27 - Air Quality Plans
- November 3 - Socio-Economic Effects Monitoring Plan
- November 10 - Access Management Plan
- December 22 - General promotion all plans
- December 29 - General promotion all plans

2017

- January 5 - General promotion all plans
- January 12 - General promotion all plans

Trans Mountain is committed to ongoing engagement throughout the life of the Project. The start and end date for the review and comment period for each environmental management plan is defined. These timelines are required to allow time for preparation of the final Plan in order to meet regulatory requirements and NEB submission dates. Although a formal review period may be closed, each plan remains available for review on transmountain.com.

3.0 Consultation and Engagement: Activities and Feedback

Consultation and engagement activities completed with identified stakeholder groups are described below, including: public stakeholders (Section 3.1); regulatory authorities (Section 3.2); and landowner/tenants (Section 3.3).

Feedback on the draft Plan, Trans Mountain's response, and where each issue or concern is addressed in the Plan has been outlined in each section according to stakeholder group.

3.1 Public Consultation

3.1.1 Public Consultation Summary – May 2012 to June 2015

No specific feedback regarding fugitive emissions from the WMT was received during public consultation and engagement activities between May 2012 and July 1, 2015.

3.1.2 New Interests, Issues, Concerns and Response – July 2015 to August 2016

No new issues or concerns about fugitive emissions from the WMT were identified through public engagement and communication opportunities during the July 2015 to August 2016 reporting period.

3.1.3 Feedback Regarding the Draft Plan

Public feedback regarding the draft Plan is described in Table A-1.

TABLE A-1
SUMMARY OF PUBLIC CONSULTATION ACTIVITIES RELATED TO THE FUGITIVE EMISSIONS MANAGEMENT PLAN FOR WESTRIDGE MARINE TERMINAL (JULY 2015 TO MARCH 2017)

Issue or Concern	Trans Mountain Response	Where Addressed in the Plan
• Concerns about odours from existing operations; • Concerns about possible health effects associated with fugitive emissions	Trans Mountain has committed to meeting the ambient air quality objectives (AAQOs). Ambient air quality will be monitored continuously and the results posted on a public website (NEB Condition 52 AEMP for WMT Section 4). Many of the AAQOs are based on nuisance odour or human health based effects, and if exceeded, would initiate a review with mitigation as a possible outcome. A Human Health Risk Assessment (HHRA) was completed in 2014 that included the air toxics of interest. Management of fugitive emissions (causing odour) is addressed in Sections 4 through 8.	Sections 4 to 8 of this Plan

3.2 Regulatory Consultation

Trans Mountain has initiated consultation and will continue to work with Appropriate Government Authorities to ensure that the measures implemented to avoid, minimize and mitigate Project effects on spotted owl and their habitat align with relevant government policy.

3.2.1 Regulatory Consultation Summary – May 2012 to June 2015

Meetings between Trans Mountain and the members of the Lower Fraser Valley Air Quality Coordinating Committee were held on September 25, 2014 and November 13, 2014.

3.2.2 Feedback Regarding the Draft Plan – July 2015 to March 2017

A summary of consultation related to the draft Plan is described in Table A-2.

TABLE A-2
SUMMARY OF REGULATORY CONSULTATION ACTIVITIES RELATED TO THE FUGITIVE EMISSIONS MANAGEMENT PLAN FOR WESTRIDGE MARINE TERMINAL (JULY 2015 TO FEBRUARY 2017)

Invited Stakeholder Group/ Agency Name	Method of Contact	Date of Consultation Activity	Feedback/Stakeholder Response	Trans Mountain Response	Where Addressed in the Plan
BC OGC	Email	December 16, 2016	Table 1, row 6 refers to Section 0. Should this be Section 8?	Yes, this should be Section 8.	Concordance Table
Metro Vancouver	Letter Incoming	March 3, 2017	Section 5.1.1 Emissions verification for tankers is currently proposed to employ a "real-time portable monitor". Please provide more detail on the type of monitoring technologies: infrared camera, portable hydrocarbon analyzer (FID), etc.	The leak detection methods for tankers will be based on US EPA Method 21 using a Flame Ionization Detector (FID) or a Photo Ionization Detector (PID). A high flow sampler will be used to measure the leak rate.	Section 5.1.1
Metro Vancouver	Letter Incoming	March 3, 2017	Section 5.1.3 and 5.1.4 The verification testing for WMT Vapour Recovery Units (VRU) and Vapour Combustion Units (VCU) should include speciated VOC sampling to ensure that benzene destruction targets are being met, as well as to characterize the mix of VOCs being emitted. US EPA Method 18 (Volatile Organic Compounds by Gas Chromatography) offers one possible test approach.	Agreed. VOC canister samples will be taken in triplicate on the inlet and exhaust gas streams, both midway and in the last two hours of tanker loading.	Section 5.1.3 and 5.1.4
Metro Vancouver	Letter Incoming	March 3, 2017	Section 5.1.3 Emissions verification for the Vapour Recovery Units indicates "Trans Mountain will assess the need for annual testing to ensure the system is operating within the designed specifications". Metro Vancouver requests that the fugitive emissions plan specify that annual performance testing will be conducted, to verify the system's operating performance on an ongoing basis, and that these test results be made public.	Trans Mountain will rephrase the section mentioned to read "Trans Mountain will assess the appropriate frequency of testing to ensure the system is operating within the designed specifications". Trans Mountain feels it is reasonable to determine frequency after preliminary testing of the system but confirms that it will be on an ongoing basis. The results of the VRU testing will be made available to regulators upon request.	Section 5.1.3
Metro Vancouver	Letter Incoming	March 3, 2017	Section 6 Leak detection procedures for the WMT indicate that "Fugitive VOCs from leaking components (other than VRUs, VCU and the liquid storage tanks) will be measured using an infrared camera." It is uncertain that an infrared camera	The Plan has been updated to clarify that infrared technology will be used to identify any large equipment leaks and an OVA will be used to measure identified leak concentrations.	Section 6

Invited Stakeholder Group/ Agency Name	Method of Contact	Date of Consultation Activity	Feedback/Stakeholder Response	Trans Mountain Response	Where Addressed in the Plan
			can be used to "measure" equipment leaks, and in fact, the next paragraph states that "all components at these facilities will be scanned annually with an infrared camera". This section needs additional detail on whether the infrared technology is intended to be used as more of a visual scan to screen for leaks, which if detected, would result in the use of an organic vapour analyzer (OVA) or other type of portable hydrocarbon analyzer to measure the leak rate, which would in turn allow for quantification of fugitive emissions. The summary in Section 10 states that "Piping will be monitored using infrared camera technology, portable organic vapour analyzers….." but Section 6 makes no mention of the use of OVAs.		
Metro Vancouver	Letter Incoming	March 3, 2017	Section 6 Metro Vancouver would like a commitment to a comprehensive Leak Detection and Repair program that includes all equipment onsite (VRUs, VCU and the liquid storage tanks, as well as process equipment such as valves, flanges, seals, etc.). The leak detection and repair program should be compliant with current best practices, such as the US EPA Leak Detection and Repair Best Practices Guide. Section 6 states that "in rare cases that components are found to be leaking materially significant quantities of vapour, they will be repaired as soon as reasonably practical." Clarification is needed on what is meant by "materially significant" and "reasonably practical". As noted above documents from the US EPA as well as the Canadian Council of Ministers of the Environment provide guidance and definitions on leakage rates for various components, and prescribed repair times.	Infrared leak detection technology is widely used in oil and gas upstream and midstream Leak Detection and Repair (LDAR) programs. Trans Mountain feels the program is adequate for the facilities as there is still a mechanism with the organic vapour analyzer (OVA) to quantify leaks and the US EPA LDAR best practices guideline is focused on petroleum refining and chemical manufacturing facilities, which Trans Mountain is not. Materially significant is generally accepted as 10,000 ppm VOC equipment leak in fugitive emissions regulations. Reasonably practical remains subjective; however, due to the nature of the equipment usage having significant downtime between tanker loadings, Trans Mountain will not have issues that many oil and gas facilities have where taking a system out of service requires onerous planning and facilitation. Once a leak is detected it will be fixed as soon as possible pending various factors like part availability, access, safety etc. Trans Mountain continuously assesses the Environment Protection Programs on an annual basis, and with every year, new data is considered if a change is required or improvement to the program is available. Opportunities for better leak prevention will be considered and assessed every year by Trans Mountain.	Section 6
Metro Vancouver	Letter Incoming	March 3, 2017	Section 6 Metro Vancouver would like a commitment from Trans Mountain to public reporting of emissions verification testing results (including tanker leak testing, VRU and VCU testing) and all ongoing emissions test results for Westridge Marine Terminal.	Trans Mountain has not received interest from the public to have these reports available. As they will be highly technical reports, Trans Mountain will not publish these reports but will share them with regulators who have made specific requests to receive them. Trans Mountain isn't trying to avoid disclosure of these reports but questions relevancy to the public who are not subject matter experts	n/a

Invited Stakeholder Group/ Agency Name	Method of Contact	Date of Consultation Activity	Feedback/Stakeholder Response	Trans Mountain Response	Where Addressed in the Plan
				and do not have context on what the data means.	
Metro Vancouver	Letter Incoming	March 3, 2017	Section 7 – indicates that, with respect to the National Pollutant Release Inventory, "Both fugitive and point source emissions must be calculated and reported if reporting thresholds are exceeded." Metro Vancouver requests that calculated emissions should be reported to the NPRI, even if below reporting thresholds.	Trans Mountain will comply with the NPRI guidelines and will not report emissions below reporting thresholds as this is the standard set out by ECCC. However, if there is a specific contaminant of interest, Trans Mountain asks that Metro Vancouver request this information from Trans Mountain and provide the reason why they are collecting it.	n/a
Metro Vancouver	Letter Incoming	March 3, 2017	Section 7 – additional detail is needed on the method of calculating annual fugitive VOCs from all tankers loaded per year, based on "four surveys onboard randomly sampled tankers". Does this imply that the leak rate found for four tankers will be extrapolated to all tankers loaded each year?	As noted in Section 7, annual fugitive VOCs from tankers can be calculated based on the survey results for measured VOCs, total number of tankers loaded per year and loading time per tanker. The results from the four measurement surveys will be used to inform annual fugitive tanker emissions. Other fugitive emission sources for the WMT will be quantified as noted in Section 7.	Section 7
Environment and Climate Change Canada	Letter Incoming	February 1, 2017	Information Source/Reference: General Note Rationale: Given the potential for fugitive VOC emissions close to urban areas and within an air shed considered sensitive with respect to tropospheric ozone[1], ECCC had provided recommendations in written evidence to NEB's draft conditions. In its written evidence ECCC indicated uncertainty with respect to the assessment of fugitive VOC emissions from Westridge-associated vessels. Specifically: "*Additional time at anchor also has an impact on fugitive VOC emissions from the tanker holds. According to the Proponent's estimates in the December 2013 filing and subsequent technical reports, fugitive VOC emissions during transit and anchorage will be approximately 800 tonnes per year. Assuming that 50% of the tankers calling require anchorage for an average of 70 hours as ECCC has observed [cited in its written evidence], and applying US EPA emission factors for emissions from tanker holds during transit, ECCC then estimates that about 1600 tonnes/year of fugitive VOCs during anchorage would [potentially] be emitted. ECCC further estimates that 75% of those emissions occur in the Burrard Inlet, near urban areas.*" [1] Mean background of O3 is estimated at 20-35 ppb, 50% of the Canada Wide Standard. According to Kendry's study Background Concentrations of PM2.5 and Ozone in British Columbia, UBC, 2006, it is likely that the CWS will occasionally be exceeded by either background sources alone, or by the additive effect of local, anthropogenically-generated ozone plus background levels. Comment/Recommendation: The draft Fugitive Emissions Management Plan (FEMP) from September 14, 2016 does not	The amount of time spent by WMT-associated tankers in the Burrard inlet, either at berth or anchorage is not solely dictated by Trans Mountain. Other marine traffic, tidal conditions and weather are some of the factors that affect the WMT related vessel traffic movements. Ultimately decisions made by the Vancouver Fraser Port Authority will dictate movement of not only WMT-related tankers but also other large vessels. Trans Mountain strives to promote efficient terminal usage and minimize anchorage time.	n/a

Invited Stakeholder Group/ Agency Name	Method of Contact	Date of Consultation Activity	Feedback/Stakeholder Response	Trans Mountain Response	Where Addressed in the Plan
			reflect ECCC's input on fugitive emissions from marine sources.		
Environment and Climate Change Canada	Letter Incoming	February 1, 2017	Information Source/Reference: FEMP Section 3.3 Rationale: ECCC notes the uncertainty related to fugitive VOC emissions at anchorage and while underway, which ECCC pointed out during the review process and in written evidence. Part of the uncertainty is whether tankers will be permitted to anchor while laden, and for how long. The Proponent indicates that practically all laden tankers will "anchor" at berth, where fugitive emissions can be captured and sent to the VRU/VCU system. However, currently all laden tankers anchor before leaving the Burrard Inlet. Comment/Recommendation: The FEMP does not specify how the Proponent will avoid sending laden tankers to anchor. The FEMP does not specify how the emissions from laden tankers at anchor will be measured and/or controlled.	Trans Mountain strives to promote efficient terminal usage and minimize time spent at anchor. To help increase knowledge of regulators and stakeholders about emissions from tankers at anchor and in transit and barges during loading, Trans Mountain will try to voluntarily extend, if feasible to do so, two fugitive emission VOC surveys to tankers upon their arrival at berth or anchor, and also carry out one fugitive VOC survey of a barge at berth during loading should it be feasible to do so.	Section 5.1.1
Environment and Climate Change Canada	Letter Incoming	February 1, 2017	Information Source/Reference: FEMP Section 5 Rationale: Specific reduction targets and a method of verifying the efficacy of control technologies is necessary to ensure that target emission levels are being met. Comment/Recommendation: The FEMP lacks specific reduction targets, aka performance/process guarantees. The FEMP does not provide a methodology for verifying the new vapor collection and control system's ability to achieve desired emission limits. ECCC recommends FEMP add procedures for measuring and verifying VOC emissions during transit, anchorage and loading.	TMEP is currently negotiating performance guarantees with our contractors. There will be monitoring on the inlet and discharge to verify performance. Although measurements of fugitive emissions are neither required nor regulated by Transport Canada, should it be feasible to do so Trans Mountain will try to undertake one fugitive emission VOC survey from a tanker in transit. This survey will be conducted on a voluntary basis to increase the knowledge of this issue. KMC has no jurisdiction over the vessels that are loaded but deems these surveys to be worthwhile. Also, if feasible, one of the surveys will be conducted on a tanker that arrives at WMT before it is loaded. Fugitive surveys on tankers at anchor are discussed in the response to the previous comment.	Section 5.1.1 (tankers)
Environment and Climate Change Canada	Letter Incoming	February 1, 2017	Information Source/Reference: FEMP Sections 3 (Fugitive Emission Sources) and 5 (Verification Procedures); NEB Condition 53, part a) Rationale: Uncontrolled fugitive emissions from loading a barge can be larger than the controlled emissions from a tanker. Fugitive emissions from barge loading were part of the Proponent's assessment of its expanded operation. Moreover, the NEB Condition 53 requires the FEMP list all sources of fugitive VOCs at WMT, but the current draft FEMP includes no information on barges. Comment/Recommendation:	Four fugitive VOC measurement surveys for a tanker at berth have previously been committed to by Trans Mountain and were not neglected - see Section 5.1.1. Although measurements of fugitive emissions are neither required nor regulated by Transport Canada and the barges are identified as not being part of the Project, Trans Mountain will undertake one of the fugitive emission VOC survey to a barge at berth during loading should it be feasible to do so. This survey will be conducted on a voluntary basis to increase the knowledge of this issue. Trans Mountain has no jurisdiction	Section 5.1.1

Invited Stakeholder Group/ Agency Name	Method of Contact	Date of Consultation Activity	Feedback/Stakeholder Response	Trans Mountain Response	Where Addressed in the Plan
			Emissions assessment and verification from barge loading at WMT, as well as tanker loading have been neglected, but should be included in the assessment.	over the vessels that are loaded but deems these surveys to be worthwhile.	
Environment and Climate Change Canada	Letter Incoming	February 1, 2017	Information Source/Reference: FEMP – Section 3.3.1 and Proponent Commitment 539 Rationale: The FEMP indicates that "a collection efficiency of 99.5% [of fugitive VOCs] was conservatively assumed for WMT, resulting in up to 0.5% of fugitive emissions from tanker loading being discharged into the atmosphere". ECCC recognizes the collection efficiency of 99.5% during loading is technically feasible, but it is possible that the collection efficiency could be lower under non-ideal operation (e.g. if a vapour blower is not functioning properly) ECCC further notes that estimated collection efficiency is 99.X% on the piping diagram for the proposed vapour control system, indicating there is some uncertainty as to what will actually be achieved once the system is operational. Comment/Recommendation: ECCC recommends the FEMP include specific reduction targets for fugitive VOCs from tankers (as well as barges) associated with WMT (also known as process or performance guarantees), and include commitments to achieving them. The Proponent should also indicate the expected emission levels if the collection efficiency is less than 99.5%.	Neither tankers nor barges are subject to performance guarantees; rather, VOC emissions are addressed via management practices as addressed in Section 3.3 of the FEMP. Trans Mountain is currently negotiating performance guarantees with our contractors, with inlet and discharge monitoring to verify performance. Figure 1 has been updated to reflect the current estimated efficiencies at full capacity which are also summarized in Table 2. There is no uncertainty with respect to operational performance. Through the engineering design process, Trans Mountain has published the updated VOC collection and removal parameters, all of which are summarized in Appendix F of the AEMP for WMT (NEB Condition 52).	Section 3.3
Environment and Climate Change Canada	Letter Incoming	February 1, 2017	Information Source/Reference: FEMP Section 3.3.1 Rationale: This report has been referred to in the Proponent's application but ECCC has been unable to locate it on public sources. Once it is made available, we further request the opportunity to provide comments or feedback on any elements of the FEMP which relate to the findings of this study. ECCC has yet to be provided with evidence suggesting that US EPA AP-42 emission factors are inappropriate for estimating fugitive emissions from marine petroleum transport. Comment/Recommendation: ECCC requests a copy of the "ILTA 2014" report that demonstrates collection efficiencies of ~99.9% during tanker loading and which also indicates US EPA AP-42 emission factors are out of date.	A copy of the ILTA 2014 presentation is provided in Appendix D.	Appendix D
Environment and Climate Change Canada	Letter Incoming	February 1, 2017	Information Source/Reference: FEMP Section 3.3.3, Table 4 Rationale: In Section 3.3.1, the Proponent calls into	A mass emission rate of 2.4 mg VOC (excluding methane and ethane) vented per liter of product loaded refers to vapours vented from the VRU stack after collection and	Section 3.3.3

Invited Stakeholder Group/ Agency Name	Method of Contact	Date of Consultation Activity	Feedback/Stakeholder Response	Trans Mountain Response	Where Addressed in the Plan
			question both the US EPA AP-42 emission factors and the "default" 95% collection efficiency for fugitive VOCs from tanker loading. Thus there is uncertainty with respect to amount of VOC emission generated during loading as well as how much can be collected, and it is unclear how the 2.4 mg VOC/L emission factor, and the basis of design of the collection and VRU/VCU system, was derived. Comment/Recommendation: The Proponent indicates the VRU removal efficiency is 99% based on "a mass emission rate of 2.4 mg VOC vented per liter of liquid loaded". ECCC requests clarification whether this refers to vapours vented at the tanker after collection at 99.5% efficiency, or vented at the VRU after recovery, or both vented vapours combined.	recovery by the VOC adsorption vessel.	
Environment and Climate Change Canada	Letter Incoming	February 1, 2017	Information Source/Reference: FEMP Section 5, Commitment 539 Rationale: Section 5.1.1 indicates that the four sampling surveys onboard randomly selected tankers at WMT, during which cargo tank covers and associated seals will be checked for leaks of total hydrocarbons, is sufficient to verify fugitive emissions from Tanker Loading. But more data is required to verify the performance of the collection system on an ongoing basis. Comment/Recommendation: ECCC believes that the Proponent's proposed method of sampling four randomly selected tankers is insufficient to verify fugitive emissions from tanker loading.	Trans Mountain disagrees with the suggestion that four random tanker at berth surveys are inadequate. As discussed in Section 3.3.1 of the FEMP, there are several layers of leak detection including practical measures such as visual, odour and audio inspections in addition to measured pressure levels inside the holds to verify that the tanker holds are gas tight and meet the requirements of the Tanker Acceptance Criteria.	Section 3.3.1
Environment and Climate Change Canada	Letter Incoming	February 1, 2017	Information Source/Reference: FEMP Section 5, Commitment 539 Rationale: Targets and verification procedures are of particular importance because the level of uncertainty is high. In Section 3.3.1, the Proponent states that US EPA AP-42 emission factors for VOC emissions are out of date, but then proposes in Section 7 to use these same emission factors to quantify annual emissions of VOCs not destructed by the VCU. Moreover, while VOC emissions from anchorage/berth/maneuvering were included in the Proponent's revised CMAQ Modelling (A4S716) uncertainties remain with respect to the revised marine emissions used. It appears that marine emission rates were based on annual averages, whereas the Proponent's dispersion and original CMAQ modeling exercises assumed two inbound vessels, two outbound vessels, two vessels at anchor and three vessels at berth. These differences in activity levels could have important impact on estimated concentrations. Long-term monitoring of potential uncollected loading losses when tankers and barges are at	Trans Mountain is currently negotiating performance guarantees with our contractors. There will be monitoring on the inlet and discharge to verify performance. As stated in Section 2.5 of the Supplemental Air Quality Technical Report No. 3 (Appendix F of AEMP for WMT [NEB Condition 52]), the Levelton measured emission factor of 547 mg VOC per litre of oil loaded was used to estimate fugitive VOC emissions during loading. This value is 5 to 8 times higher than the US EPA values for crude oil which range from 73 to 120 mg VOC per litre of oil loaded. This Levelton value, which is conservative and more robust, will be used to estimate annual fugitive VOC emissions.	Section 5

Invited Stakeholder Group/ Agency Name	Method of Contact	Date of Consultation Activity	Feedback/Stakeholder Response	Trans Mountain Response	Where Addressed in the Plan
			berth, in connection with monitoring product loaded and collected loading losses[2], is data that could be used to verify the collection system's performance guarantees. [2] The California Air Resources Board describes duration and data collection in its 2010 draft test protocol for "Detection and Quantification of Fugitive and Vented Methane, Carbon Dioxide, and Volatile Organic Compounds from Crude Oil and Natural Gas Facilities" Comment/Recommendation: ECCC recommends the FEMP include specific targets for emissions reductions from the vapour collection and control system as performance guarantees, and then describe in detail the verification methods that will be used to validate these targets are being met.		
Environment and Climate Change Canada	Letter Incoming	February 1, 2017	Information Source/Reference: Section 7 – Emission Quantification Rationale: Four spot checks for leaks over the course of a year are unlikely to be sufficient to represent annual fugitive emissions, or to capture an event where VOCs are unexpectedly vented. Comment/Recommendation: ECCC believes that the Proponent's proposed method of sampling four randomly selected tankers is insufficient to verify fugitive emissions from tanker loading. If the Proponent is using updated emission factors that have been validated, then ECCC requests to be able to review this information.	Trans Mountain disagrees with the suggestion that four random tanker at berth surveys are inadequate. As discussed in Section 3.3.1 of the FEMP, there are several layers of leak detection including practical measures such as visual, odour and audio inspections to verify that the tanker holds are gas tight and meet the requirements of the Tanker Acceptance Criteria. Section 3.3.1 also compares the Levelton emission factor used in the air quality assessment with the less conservative US EPA AP-42 emission factor.	Section 3.3.1
Environment and Climate Change Canada	Letter Incoming	February 1, 2017	Information Source/Reference: Section 8 – Additional Mitigation Measures, Commitment 539 Rationale: Section 8 of the draft FEMP states "the overall objective….at WMT is to minimize and mitigate fugitive emissions whenever feasible" but does not state what threshold will trigger additional mitigation measures. Section 8 indicates that additional mitigation measures will be taken under certain circumstances, such as an odour complaint, but does not specify what those measures would be. Comment/Recommendation: ECCC recommends the FEMP specify in greater detail what mitigation measures will be undertaken if specific reduction targets are not met. ECCC recommends that Section 8 be linked process guarantees for the overall emission control system (including collection), and specify what actions will be taken if process guarantees of the vapour collection/control system are not met.	The ambient air quality monitoring will ensure that all applicable ambient air quality objectives are met as outlined in Section 8. Non-compliance with these objectives and odour complaints are both triggers for additional mitigation. Trans Mountain is currently negotiating performance guarantees with our contractors. There will be monitoring on the inlet and discharge to verify performance.	Section 8

APPENDIX B

TABLE B-1
RECORD OF STAKEHOLDER NOTIFICATIONS OF PLAN

Regulator/Stakeholder Group	Contact Name (if applicable)	Date	Method of Contact
Landowners	N/A	September 11, 2016	Letter
Aboriginal Groups (please refer to Appendix B)	N/A	September 26, 2016	Letter
Vancouver Fraser Port Authority	Tim Blair	September 20, 2016	Email
Jasper National Park of Canada	Mayabe Dia	September 20, 2016	Email
Alberta Environment and Parks	Corinee Kristensen	September 20, 2016	Email
Ministry of Transportation and Infrastructure	Lisa Gow	September 20, 2016	Email
BC Parks	Ken Morrison	September 20, 2016	Email
BC Oil and Gas Commission	Brian Murphy	September 20, 2016	Email
Ministry of Natural Gas Development	Linda Beltrano	September 20, 2016	Email
Forests, Lands and Natural Resource Operations	Andrea Mah	December 22, 2016	Email
Forests, Lands and Natural Resource Operations	Susan Fitton	September 20, 2016	Email
FVAQC	Roger Quan	October 21, 2016	Email
ECCC	Phil Wong	October 21, 2016	Email
ECCC	Rachel Mayberry	October 28, 2016	Email
ECCC	Coral Deshield	December 21, 2016	Email
ECCC	Phil Wong	December 21, 2016	Email
Vancouver Fraser Port Authority	Patrick Coates	September 20, 2016	Email
Department of Fisheries and Oceans	Sandra Hollick-Kenyon	December 3, 2016	Email
Department of Fisheries and Oceans	Alston Bonamis	December 3, 2016	Email
City of Edmonton	N/A	September 19-23, 2016	Letter
City of Spruce Grove	N/A	September 19-23, 2016	Letter
Municipality of Jasper	N/A	September 19-23, 2016	Letter
Parkland County	N/A	September 19-23, 2016	Letter
Strathcona County	N/A	September 19-23, 2016	Letter
Town of Edson	N/A	September 19-23, 2016	Letter
Town of Hinton	N/A	September 19-23, 2016	Letter
Town of Stony Plain	N/A	September 19-23, 2016	Letter
Village of Wabamun	N/A	September 19-23, 2016	Letter
Yellowhead County	N/A	September 19-23, 2016	Letter
City of Kamloops	N/A	September 19-23, 2016	Letter
City of Kamloops RCMP Detachment	N/A	September 19-23, 2016	Letter
Kamloops Hotel Association	N/A	September 19-23, 2016	Letter
Kamloops Chamber of Commerce	N/A	September 19-23, 2016	Letter
Kamloops Ministry of Jobs, Tourism, Skills Training	N/A	September 19-23, 2016	Letter
City of Merritt	N/A	September 19-23, 2016	Letter
City of Merritt RCMP Detachment	N/A	September 19-23, 2016	Letter
Clearwater Employment Services	N/A	September 19-23, 2016	Letter
Tourism Wells Grey	N/A	September 19-23, 2016	Letter
Clearwater Chamber of Commerce	N/A	September 19-23, 2016	Letter
District of Clearwater	N/A	September 19-23, 2016	Letter
District of Clearwater RCMP Detachment	N/A	September 19-23, 2016	Letter
Interior Health	N/A	September 19-23, 2016	Letter
Merritt Chamber of Commerce	N/A	September 19-23, 2016	Letter
Northern Health	N/A	September 19-23, 2016	Letter
Regional District of Fraser Fort George	N/A	September 19-23, 2016	Letter

TABLE B-1 Cont'd

Regulator/Stakeholder Group	Contact Name (if applicable)	Date	Method of Contact
Thompson Nicola Regional District	N/A	September 19-23, 2016	Letter
Town of Blue River	N/A	September 19-23, 2016	Letter
Venture Kamloops	N/A	September 19-23, 2016	Letter
Village of Valemount	N/A	September 19-23, 2016	Letter
Village of Valemount RCMP Detachment	N/A	September 19-23, 2016	Letter
Valley District	N/A	September 19-23, 2016	Letter
Valemount Learning Centre	N/A	September 19-23, 2016	Letter
Work Skills BC- Valemount	N/A	September 19-23, 2016	Letter
VARDA	N/A	September 19-23, 2016	Letter
Valemount Chamber of Commerce	N/A	September 19-23, 2016	Letter
Grassland's Conservation Council	N/A	September 19-23, 2016	Letter
Abbotsford Chamber of Commerce	N/A	September 19-23, 2016	Letter
Abbotsford Police Department	N/A	September 19-23, 2016	Letter
ASCA	N/A	September 19-23, 2016	Letter
BC Invasive Species	N/A	September 19-23, 2016	Letter
BC Ministry of Children and Family Development	N/A	September 19-23, 2016	Letter
BC Ministry of Social Development	N/A	September 19-23, 2016	Letter
BC Nature	N/A	September 19-23, 2016	Letter
BC Wildlife Federation	N/A	September 19-23, 2016	Letter
Burnaby Board of Trade	N/A	September 19-23, 2016	Letter
Burnaby RCMP Detachment	N/A	September 19-23, 2016	Letter
Chilliwack Chamber of Commerce	N/A	September 19-23, 2016	Letter
Chilliwack Economic Partners	N/A	September 19-23, 2016	Letter
City of Abbotsford	N/A	September 19-23, 2016	Letter
City of Burnaby	N/A	September 19-23, 2016	Letter
City of Chilliwack	N/A	September 19-23, 2016	Letter
City of Coquitlam	N/A	September 19-23, 2016	Letter
City of New Westminster	N/A	September 19-23, 2016	Letter
City of Port Coquitlam	N/A	September 19-23, 2016	Letter
City of Port Moody	N/A	September 19-23, 2016	Letter
City of Surrey	N/A	September 19-23, 2016	Letter
Coquitlam RCMP Detachment	N/A	September 19-23, 2016	Letter
Corporation of Delta	N/A	September 19-23, 2016	Letter
District of Hope	N/A	September 19-23, 2016	Letter
Eagle Creek	N/A	September 19-23, 2016	Letter
Fraser Valley Invasive Plant Council	N/A	September 19-23, 2016	Letter
Fraser Valley Regional District	N/A	September 19-23, 2016	Letter
Glen Valley Watershed Society	N/A	September 19-23, 2016	Letter
Hope Chamber of Commerce	N/A	September 19-23, 2016	Letter
Hope Community Policing Office	N/A	September 19-23, 2016	Letter
Langley Chamber of Commerce	N/A	September 19-23, 2016	Letter
LEPS	N/A	September 19-23, 2016	Letter
LFVAQCC	N/A	September 19-23, 2016	Letter
Metro Vancouver	N/A	September 19-23, 2016	Letter
Newton RCMP Detachment	N/A	September 19-23, 2016	Letter
RCMP Division 'E'	N/A	September 19-23, 2016	Letter
Sapperton Fish and Game	N/A	September 19-23, 2016	Letter
Stoney Creek	N/A	September 19-23, 2016	Letter
Surrey Board of Trade	N/A	September 19-23, 2016	Letter
Surry Environmental Partners	N/A	September 19-23, 2016	Letter
Surrey RCMP Detachment	N/A	September 19-23, 2016	Letter
Township of Langley	N/A	September 19-23, 2016	Letter
Township of Langley RCMP Detachment	N/A	September 19-23, 2016	Letter

TABLE B-1 Cont'd

Regulator/Stakeholder Group	Contact Name (if applicable)	Date	Method of Contact
TriCities Chamber of Commerce	N/A	September 19-23, 2016	Letter
Upper Fraser Valley Regional Detachment	N/A	September 19-23, 2016	Letter
Village of Anmore	N/A	September 19-23, 2016	Letter
Village of Belcarra	N/A	September 19-23, 2016	Letter
Yorkson	N/A	September 19-23, 2016	Letter
ACGI Shipping	N/A	September 19-23, 2016	Letter
Barnett Marine Park	N/A	September 19-23, 2016	Letter
BC Ambulance	N/A	September 19-23, 2016	Letter
BC Chamber of Shipping	N/A	September 19-23, 2016	Letter
BC Coast Pilots (BCCP)	N/A	September 19-23, 2016	Letter
BROKE (Burnaby Residents Opposed to Kinder Morgan Expansion)	N/A	September 19-23, 2016	Letter
Canadian Pacific (CP) Rail	N/A	September 19-23, 2016	Letter
Canexus- Ero- Newalta-Univar Community Advisory Panal (CAP)	N/A	September 19-23, 2016	Letter
Canexus Chemicals	N/A	September 19-23, 2016	Letter
Chevron	N/A	September 19-23, 2016	Letter
CN Rail	N/A	September 19-23, 2016	Letter
Council of Marine Carriers	N/A	September 19-23, 2016	Letter
District of North Vancouver	N/A	September 19-23, 2016	Letter
Empire Shipping	N/A	September 19-23, 2016	Letter
Erco Worldwide	N/A	September 19-23, 2016	Letter
First Nation Emergency Services Society (FNESS)	N/A	September 19-23, 2016	Letter
First Nation Health Authority	N/A	September 19-23, 2016	Letter
Fraser Health Authority	N/A	September 19-23, 2016	Letter
Inchcape Shipping	N/A	September 19-23, 2016	Letter
Island Tug and Barge	N/A	September 19-23, 2016	Letter
Kask Brothers	N/A	September 19-23, 2016	Letter
Ledcor Resources and Transportation Limited Partnership	N/A	September 19-23, 2016	Letter
Mason Agency (Shipping Service)	N/A	September 19-23, 2016	Letter
MLA – Burnaby Lougheed	N/A	September 19-23, 2016	Letter
MLA – Burnaby North	N/A	September 19-23, 2016	Letter
MLA – Coquitlam – Burke Mountain	N/A	September 19-23, 2016	Letter
MLA - North Vancouver Lonsdale	N/A	September 19-23, 2016	Letter
MLA – North Vancouver Seymour	N/A	September 19-23, 2016	Letter
MLA – Port Moody - Coquitlam	N/A	September 19-23, 2016	Letter
MP – Delta	N/A	September 19-23, 2016	Letter
MP – North Burnaby Seymour	N/A	September 19-23, 2016	Letter
MP – North Vancouver	N/A	September 19-23, 2016	Letter
MP – Vancouver Centre	N/A	September 19-23, 2016	Letter
MP – Vancouver East	N/A	September 19-23, 2016	Letter
MP – Vancouver Quadra	N/A	September 19-23, 2016	Letter
MP – West Vancouver – Sunshine Coast – Sea to Sky Country	N/A	September 19-23, 2016	Letter
North Shore NOPE	N/A	September 19-23, 2016	Letter
North Vancouver Chamber of Commerce	N/A	September 19-23, 2016	Letter
Pacific Coast Terminal	N/A	September 19-23, 2016	Letter
Pacific Pilotage Authority	N/A	September 19-23, 2016	Letter
Pacific Wildlife Foundation	N/A	September 19-23, 2016	Letter
Peter Kiewit Infrastructure Co.	N/A	September 19-23, 2016	Letter
Seaspan	N/A	September 19-23, 2016	Letter
Shell Terminal	N/A	September 19-23, 2016	Letter
Simon Fraser University	N/A	September 19-23, 2016	Letter

TABLE B-1 Cont'd

Regulator/Stakeholder Group	Contact Name (if applicable)	Date	Method of Contact
SMIT Marine	N/A	September 19-23, 2016	Letter
Suncor Terminal	N/A	September 19-23, 2016	Letter
UBC Stellar Sea Lion (Marine Mammal) Research Centre	N/A	September 19-23, 2016	Letter
Vancouver Aquarium	N/A	September 19-23, 2016	Letter
Vancouver Board of Trade	N/A	September 19-23, 2016	Letter
Vancouver Coastal Health Authority	N/A	September 19-23, 2016	Letter
Vancouver Pile and Dredge	N/A	September 19-23, 2016	Letter
West Vancouver Chamber of Commerce	N/A	September 19-23, 2016	Letter
Westward Shipping	N/A	September 19-23, 2016	Letter
Wild Bird Trust	N/A	September 19-23, 2016	Letter
Metro Vancouver Regional District	Ali Ergudenler	September 19-23, 2016	Email
Metro Vancouver Regional District	Roger Quan	September 19-23, 2016	Email

APPENDIX C

KMC ENVIRONMENTAL MANUAL. SECTION 4.2 ODOUR COMPLAINT INVESTIGATION AND RESPONSE PROCEDURE

4.2 ODOUR COMPLAINT INVESTIGATION AND RESPONSE PROCEDURE

Revision: 1 Effective: October 26, 2016

Table of Contents

Contents of this Document

1.0 INTRODUCTION

1.1 Purpose

1.1.1 This document outlines the requirements associated with receiving, responding to, investigating, and closing out odour complaints.

1.2 Authorization

1.2.1 KMC personnel who have been qualified by successfully completing the *Environmental Complaints (Core B)* Skill Packet of the KMC KEEP Canada training program or have been approved by Kinder Morgan Canada based on equivalent training or experience are authorized to perform this procedure.

1.3 Applicability

1.3.1 This procedure applies to the following (checked) systems:

- ☑ Trans Mountain
- ☑ Puget Sound
- ☑ Jet Fuel
- ☑ North 40 Terminal

1.4 Responsibilities

1.4.1 Regional Director

- Review and sign Section E of the *Environmental Complaint Report Form*

1.4.2 District Supervisor

- Ensure that personnel performing work in relation to this procedure are properly qualified
- Review and sign Section E of the *Environmental Complaint Report Form*
- Provide recommendations as appropriate

1.4.3 Control Centre Operator

- Receive odour complaint and respond as required following Control Centre General Procedure *2.2.9 Environmental Complaint Notification*
- Complete sections A – C of the *Environmental Complaint Report Form*

- Contact on call local responding field technician to initiate onsite investigation
- Initiate an Odour Complaint Emergency Response Line (ERL) process in the event that there are two or more odour complaints in the same geographical area within a 24 hour rolling time period
- Initiate emergency response procedures as needed

1.4.4 EHS Advisor

- Review and sign Section E of the *Environmental Complaint Report Form*
- Provide recommendations as appropriate

1.4.5 Environmental Specialist (Air)

- Review available air monitoring data to assist in attributing the odour complaint to Kinder Morgan activities. Refer to *3.1.2. Ambient Fenceline Monitoring Data Access Procedure*
- Assign the *Environmental Complaint Report Form* an identification number, and complete section D of the form
- Update the Odour Complaints Master List, located:

  E:\DEPT\EHS\Environment\General\Environmental Complaints\OdrCom

1.4.6 Responding Field Technician

- Complete an onsite investigation of the odour complaint
- Perform sampling procedures as required for the location
- Complete the required sections of an *Odour Complaint Investigation Form* and submit as directed
- Report the investigation results to Control Centre
- Contact external emergency personnel as needed
- Contact the complainant to relay investigative findings if requested in Section B of the Environmental Complaint Report Form

2.0 PROCEDURE SPECIFIC INFORMATION AND REQUIREMENTS

2.1 Background

2.1.1 Timely investigation of odour complaints is important in maintaining public (stakeholder) confidence, identifying operational problems, and fulfilling commitments made to external regulatory bodies.

2.1.2 Odour complaint investigations from Burnaby, Westridge, and Sumas include air sampling using a Jerome H_2S Analyzer.

2.2 Receipt of Odour Complaints

2.2.1 The Control Centre is the initial point of contact for all odour complaints. This ensures that the complaint is properly documented and investigated.

2.2.2 Other KMC personnel receiving an odour complaint must direct the complainant to the Control Centre. Always provide the Control Centre contact number.

2.3 Documentation

2.3.1 The *Environmental Complaint Report Form* is initiated by the CCO, who completes sections A through C. The EHS Advisor, District Supervisor, Regional Director, and Environmental Specialist then complete the balance of the form.

2.3.2 The *Odour Complaint Investigation Form* is completed by the Responding Field Technician during onsite investigation of the odour complaint.

3.0 REQUIRED EQUIPMENT AND SUPPLIES

3.1 Equipment Required

3.1.1 At a minimum Responding Field Technicians must have:

- A personal gas detector (ITX gas detector)
- A communication device (radio or cell) in the event an ERL needs to be initiated.

3.1.2 Additional equipment required by Responding Field Technicians at Burnaby, Westridge, and Sumas:

- Jerome H_2S Analyzer
- Calibration accessories

4.0 HAZARDS AND CONTROL MEASURES

4.1 Health and Safety Hazards and Controls

Hazard		Control Measure
4.1.1	Safety hazards at worksite	Check the work area for hazards that may cause personal injury. Correct any hazardous situations before work begins. Additional information and guidance regarding hazard recognition and control can be found in the KMC Health and Safety Standards Manual, Section *401 Hazard Identification/Assessment & Control Program*. Use PPE as required. See section 4.1.3 below for details.
4.1.2	Exposure to toxic or explosive atmospheres	Gas monitoring may be required due to the nature of the work. Refer to the KMC Health and Safety Standards Manual, part *516 Gas Detection*.

4.1.3 Personal Protective Equipment

4.1.3.1 Use approved PPE as required. At a minimum this should include:

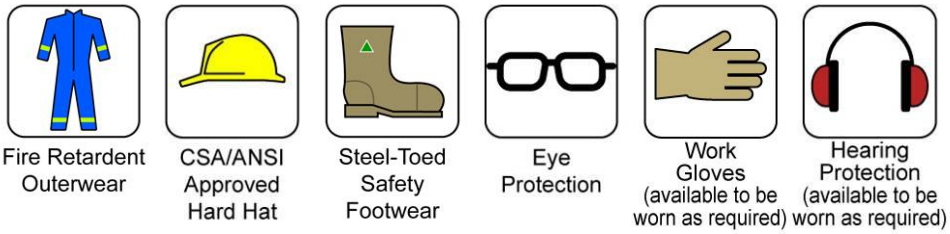

4.1.3.2 Additional PPE may be required depending on the hazards anticipated.

Refer to the Safe Work Practice in KMC Health and Safety Standards Manual, Sections *527 Personal Protective Equipment* and *703 Respiratory Protective Equipment* for additional information and guidance.

4.2 Integrity Hazards and Controls

None identified

4.3 Operational Hazards and Controls

None identified

4.4 Environmental Hazards and Controls

None identified

5.0 PROCEDURE

5.1 Receipt of Odour Complaint

All Personnel (except Control Centre Operators):

This procedure is followed by all personnel (other than Control Centre Operators) who receive an odour complaint.

5.1.1 Direct the complainant to contact the Control Centre Emergency Line. Always provide the telephone number: **1-888-876-6711**.

Control Centre Operators:

5.1.1.1 The following procedure is applicable to the Control Centre Operators receiving an odour complaint.

5.1.2 Initiate an *Environmental Complaint Report* following Control Centre General Procedure *2.2.9 Environmental Complaint Notification*.

5.1.3 If there are two or more odour complaints received in the same geographical area, within a 24 hour rolling time period the Control Centre Operators will initiate an Odour Complaint ERL.

5.2 Odour Complaint Field Investigation

These steps are carried out by the Responding Field Technician, after receiving complaint information from the Control Centre.

WARNING

Refer to section 6.0 Abnormal Operating Conditions if toxic or explosive gas is detected or a pipeline release is identified or suspected.

5.2.1 Conduct an on-site field investigation to verify whether odours are present.

5.2.2 Record details of the weather conditions, operating conditions and odour observations in section A of the *Odour Complaint Investigation Form*.

5.2.3 (Burnaby, Westridge, and Sumas only) Perform air sampling.

5.2.3.1 Conduct at least one 15 minute air sampling event using a Jerome H_2S Analyzer.

Refer to Environment Manual section *4.2.1 Jerome H_2S Analyzer Operation and Maintenance* for additional information.

5.2.3.2 Record the results in section B of the *Odour Complaint Investigation Form*.

5.2.3.3 Compare measurements to AEGL-1, AEGL-2, and STEL criteria provided in Section B of the *Odour Complaint Investigation Form*.

5.2.3.4 If exceedances are noted, take a second sample and contact the Control Centre with details.

5.2.4 Make a drawing of the site/area where the odour was reported in section C of the *Odour Complaint Investigation Form*.

5.2.4.1 Take photographs of the area as appropriate to support the sketch.

5.2.5 Contact the Control Centre immediately following the investigation to discuss results and observations, and record the details of this conversation in section D of the *Odour Complaint Investigation Form*.

5.2.5.1 In consultation with the CCO, determine if the odour is likely to be attributable to KMC, and if so, the likely cause of the odour (i.e. routine operations or possible spill/release).

5.2.6 Sign and forward the *Odour Complaint Investigation Form* as directed (see email information in section D of the form).

5.3 Response Procedures

5.3.1 Response to Odours due to KMC Release

5.3.1.1 Immediately contact the Control Centre with details.

- The Control Centre will initiate applicable emergency response procedures including ERL/ERL+.
- The Environment Department will review available air sampling and meteorological data and initiate the *Emergency Response – Air Monitoring Plan.*

5.3.1.2 Do not directly respond to complainant if response has been requested, contact KMC external relations to develop appropriate messaging and relay response.

5.3.2 Response to Odours due to KMC Routine Operations

5.3.2.1 Respond to the complainant with investigative findings.

5.3.3 Response to KMC AEGL-1, AEGL-2, or STEL 8 Hour Exceedence

5.3.3.1 Contact the Control Centre with details.

- The Control Centre will initiate applicable emergency response procedures including ERL/ERL+.
- The Environment Department will review available air sampling and meteorological data and initiate the *Emergency Response – Air Monitoring Plan.*

5.3.3.2 If the odour is likely to be attributable to KMC, respond to the complainant.

- The Environment Department will continue with the *Emergency Response – Air Monitoring Plan*, and coordinate odour control and abatement with field personnel.

5.3.3.3 If the odour is NOT likely to be attributable to KMC, contact local emergency response agencies (i.e. fire department) and respond to the complainant.

- The Environment Department will discontinue with the Emergency Response - Air Management Plan.

5.3.4 Response to Odours Not Due to KMC

5.3.4.1 Respond to the complainant with investigative findings.

5.4 Closure and Corrective Actions

This section of the procedure does not directly involve the Responding Field Technician, except to provide additional details in the completion of the *Environmental Complaint Report Form*.

5.4.1 The EHS Advisor and District Supervisor complete section E of the form including recommendations and corrective actions.

- The EHS Advisor and District Supervisor will notify the Regional Director when this is complete.

5.4.2 The Regional Director ensures that follow-up actions are completed and signs section E of the form.

- The Regional Director will notify the Environmental Specialist (Air) when this is complete.

The Environmental Specialist (Air) assigns the ECR # to the complaint and completes section D of the form. The Environmental Specialist (Air) then updates the Odour Complaints Master List located:

E:\DEPT\EHS\Environment\General\Environmental Complaints\OdrCom

6.0 ABNORMAL OPERATING CONDITIONS (AOC)

6.1 Abnormal Operating Conditions

A list of the recognition of and response to non task-specific abnormal operating conditions that may be encountered when performing this procedure is found in General Operating Procedure *3.2 Recognizing and Responding to Abnormal Operating Conditions*.

6.2 Task-Specific Abnormal Operating Conditions

6.2.1 Hazardous Levels of Toxic or Combustible Gas

RECOGNIZE: Portable gas detector alarm is triggered.

REACT: Immediately move to a safe location and notify the Control Centre. Follow established procedures for Incident Safe Approach, including securing the area to prevent unauthorized entry. Discontinue the investigation until it is safe to re-enter the area.

6.2.2 Pipeline Release Identified or Suspected

RECOGNIZE: Portable gas detector alarm is triggered or other visible indications of a spill or release.

REACT: Immediately move to a safe location and notify the Control Centre. Follow established procedures for Incident Safe Approach, including securing the area to prevent unauthorized entry. Discontinue the investigation until it is safe to re-enter the area.

7.0 REFERENCES

7.1 *KMC Health and Safety Standards Manual*

- 401 Hazard Identification/Assessment & Control Program
- 502 Action Levels
- 527 Personal Protective Equipment
- 703 Respiratory Protective Equipment

7.2 KMC Environment Manual

- *4.2.1 Jerome H_2S Analyzer Operation and Maintenance*
- *4.1.1 Environmental Complaint Report Form*
- *4.2.2 Odour Complaint Investigation Form*
- *3.1.2 Ambient Fenceline Monitoring Data Access Procedure*
- *Emergency Response – Air Monitoring Plan (KMC ERP)*
- Odour Complaints Master List

Located online in the folder E:\DEPT\EHS\Environment\General\Environmental Complaints\OdrCom

7.3 Control Centre General Procedures

- *2.2.9 Environmental Complaint Notification*

7.4 General Operations Procedures

- *3.2 Recognizing and Responding to Abnormal Operating Conditions*

APPENDIX D

ILTA 2014 Presentation

ILTA 34TH ANNUAL INTERNATIONAL OPERATING CONFERENCE & TRADE SHOW JUNE 2-4 2014

Measurement of VOC Losses During Marine Vessel Loading: A Case Study

Presented by:

Brian Cochran (URS Corporation)

Shanon DiSorbo (Kinder Morgan/DiSorbo Consulting)

URS KINDER MORGAN TERMINALS DiSorbo Consulting

ILTA 34TH ANNUAL INTERNATIONAL OPERATING CONFERENCE & TRADE SHOW JUNE 2-4 2014

Overview

I. Background
II. Problem
III. Potential Solution
IV. Existing Regulations and Guidance
V. Uncollected Loading Loss Study
VI. Results

Background – North American Tight Oil Production is Increasing…

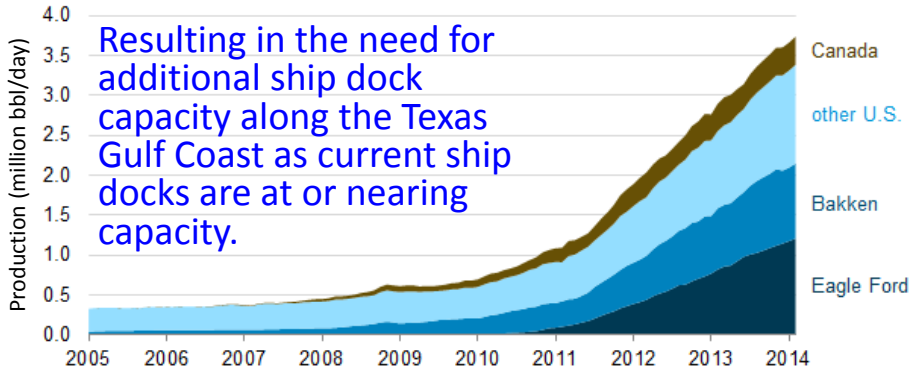

Chart Source: *U.S. Energy Information Administration and the Canadian National Energy Board*

ILTA 34TH ANNUAL INTERNATIONAL OPERATING CONFERENCE & TRADE SHOW JUNE 2-4 2014

Background – Loading Losses

- Loading losses are the primary source of evaporative emissions from rail tank car, tank truck, and marine vessel operations
- Loading losses occur as organic vapors in "empty" cargo tanks are displaced by the liquid being loaded into the tanks

Background – Loading Losses

Marine vessel loading losses can be estimated according to the formula provided in EPA document AP-42, Section 5.2 – Transportation and Marketing of Petroleum Liquids:

$$L_L = \frac{12.46(S)(P)(M)}{T}$$

Where
LL = Loading loss (lb/1000 gallons of liquid loaded)
S = Saturation factor from AP-42 (dimensionless)
P = Vapor pressure of liquid loaded (psia)
M = Molecular weight of vapors (lb/lb-mol)
T = Temperature of bulk liquid loaded (°R)

ILTA 34TH ANNUAL INTERNATIONAL OPERATING CONFERENCE & TRADE SHOW JUNE 2-4 2014

Background – Loading Losses

Based on this AP-42 equation, loading a tanker with 600,000 barrels of crude oil will generate over **20 tons** of VOC loading losses!!

Background – Collection Efficiency

- Most, but not all, loading losses are collected and routed to a control device
- Uncollected loading emissions are also referred to as "loading fugitives" and can be estimated using the following equation:

$$L_{LF} = (L_L)\ (100\% - CE)$$

Where CE = collection efficiency (%)

ILTA 34TH ANNUAL INTERNATIONAL OPERATING CONFERENCE & TRADE SHOW JUNE 2-4 2014

Background – Collection Efficiency

- Historic ship loading permit limits were based on the assumption that the ships were loaded under vacuum; therefore, a collection efficiency of 100% was claimed.
- USCG regulatory requirements do not allow for a negative pressure to be applied the cargo hold for safety reasons.
- TCEQ default collection efficiency – 95%

Problem

- 95% collection efficiency results in significant marine emissions triggering NA review (LAER and Offsets)
- Uncollected ship loading emission account for 30-70% of project emissions
- VOC Emission Reduction Credits (ERCs) - $300,000/ton
- Typical Project Requirement:
  - 400 TPY of ERCs at 95%
  - 175 TPY of ERCs at 99%
  - <120 TPY of ERCs at 99%+

ILTA 34TH ANNUAL INTERNATIONAL OPERATING CONFERENCE & TRADE SHOW JUNE 2-4 2014

Potential Solution – What about Ship Testing?

- **Pros:**
  - Potential reduction in ERCs
  - Shorter time to obtain air permit
  - More accurate emission estimate for EPA and TCEQ
- **Cons:**
  - No direct measurement testing done before
  - Time and effort for TCEQ test protocol approval
  - Cost to complete testing
  - Need for future testing

Limited Previous "Marine Vessel" Air Emissions Testing Experience

ILTA 34TH ANNUAL INTERNATIONAL OPERATING CONFERENCE & TRADE SHOW JUNE 2-4 2014

Existing Regulations and Guidance

- National Emission Standard for Marine Tank Vessel Loading Operations - MACT Subpart Y (40 CFR Part 63 – Subpart Y)
- Requires annual leak tightness certification
- Certification can happen by
  - conducting a pressure decay test, or
  - conducting EPA Method 21 testing during the final 20% of loading (10,000 ppmc leak definition)

Existing Regulations - Vapor Tightness Certification - Pressure Decay Test

VAPOR TIGHTNESS CERTIFICATE

COT Nos.	Pi mb	Pf mb	ΔP mb	Loa Rate m3/hr	Tank Vol m3	Δ PM mb	(ΔP - ΔPM) mb	VAPOR TIGHT YES/NO
1P	107	105	2	600	3382	16.3	14.3	YES
1S	107	106	1	600	3382	16.3	15.3	YES
2P	104	102	2	600	4569	11.8	9.8	YES
2S	104	103	1	600	4569	11.8	10.8	YES
3P	105	103	2	600	4659	11.6	9.6	YES
3S	103	102	1	600	4659	11.4	10.4	YES
4P	110	102	8	600	4659	12.2	4.2	YES
4S	109	106	3	600	4659	12.1	9.1	YES
5P	107	105	2	600	4650	11.9	9.9	YES
5S	108	107	1	600	4650	12.0	11.0	YES
6P	105	104	1	600	4034	13.4	12.4	YES
6S	105	102	3	600	4034	13.4	10.4	YES
Slop P	105	101	4	300	587	46.2	42.2	YES
Slop S	104	101	3	300	587	45.8	42.8	YES

- Pressurize with dry air or inert gas to at least 1.0 psig
- Record initial pressure (Pi)
- Wait 30 minutes and measure the final pressure (Pf)
- If ΔP < ΔPM the vessel is vapor tight
- ΔPM depends on permitted loading rate and size of tank

ILTA 34TH ANNUAL INTERNATIONAL OPERATING CONFERENCE & TRADE SHOW JUNE 2-4 2014

Existing Regulations and Guidance on VOC leaks on Marine Vessels

- "VOC Management Plans" – required for vessels carrying crude oil
- Guidance for plan development issued by the Marine Environment Protection Committee (MEPC) of the International Maritime Organization (IMO) – See MEPC.1/Circ.680
- Objective is to prevent or minimize VOC emissions from Crude Oil vessels during
  - Transportation, and
  - Handling - loading or discharge

What are typical concentrations during loading?

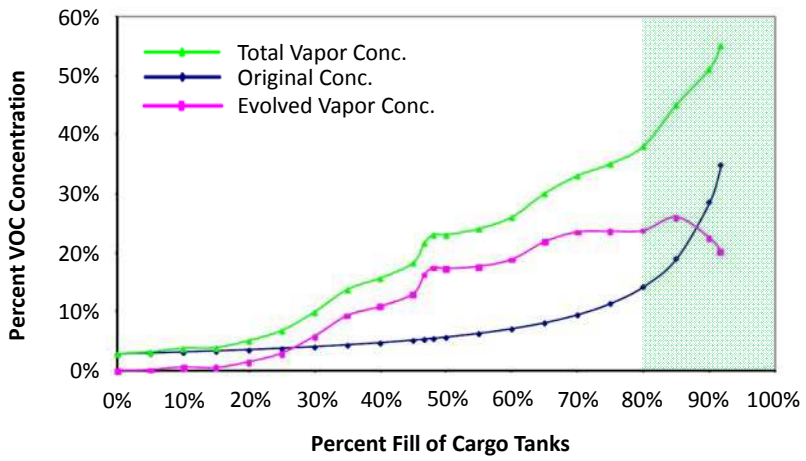

** Figure from MEPC.1/Circ.680*

ILTA 34TH ANNUAL INTERNATIONAL OPERATING CONFERENCE & TRADE SHOW JUNE 2-4 2014

What are typical cargo tank pressures during loading?

- A facility vapor collection system must maintain the pressure in a vessel's cargo tanks between 0.2 psig and 80% of the lowest setting of any of the vessel's pressure relief valves for an inerted tank vessel (33 CFR 154.824)
- Typical design pressure of cargo tanks is +3.5/-1.0 psig, however
- The typical setting of pressure/vacuum valves on crude tankers is +2.0/-0.5 psig

VOC Leak Potential Assessment

- Given that:
  - cargo tank pressures are relatively low (~0.5 psi),
  - annual leak tightness certification is required,
  - maintenance is routinely conducted, and
  - loading loss emissions are routed to a pollution control devices…
- The potential for uncollected loading losses to occur during routine loading operations on these vessels was expected to be relatively low
- Need to develop a measurements study to test this expectation

ILTA 34TH ANNUAL INTERNATIONAL OPERATING CONFERENCE & TRADE SHOW JUNE 2-4 2014

Uncollected Loading Loss Study

Study Objectives:

- Quantify uncollected (fugitive) VOC loading losses occurring on the tanker during routine product loading, and
- Provide data that could be used in the determination of emission collection efficiency

Study Design – Study Area

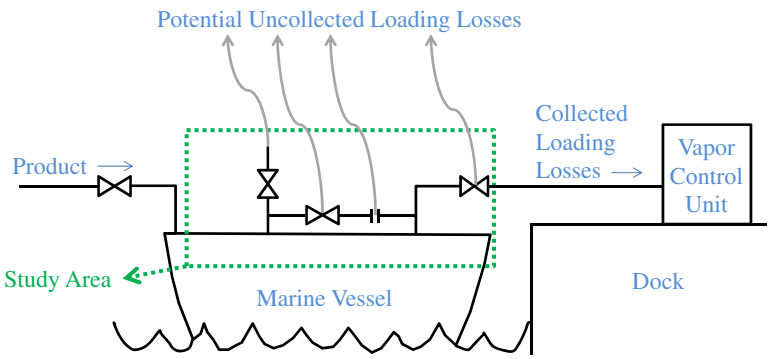

ILTA 34TH ANNUAL INTERNATIONAL OPERATING CONFERENCE & TRADE SHOW JUNE 2-4 2014

Study Design – Study Area

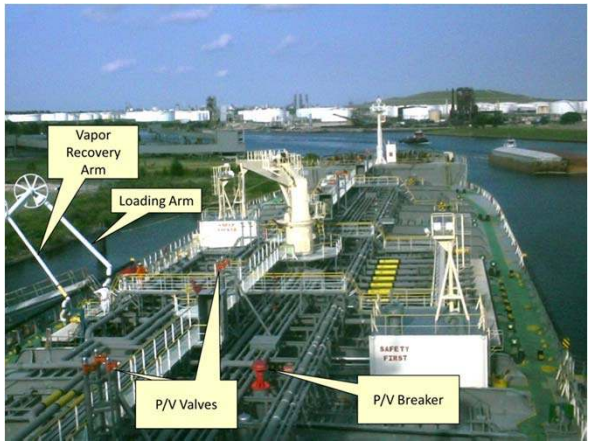

- Inert Gas System (IGS)
- Vapor Collection System
- Cargo tank access points

Study Area – Inert Gas System

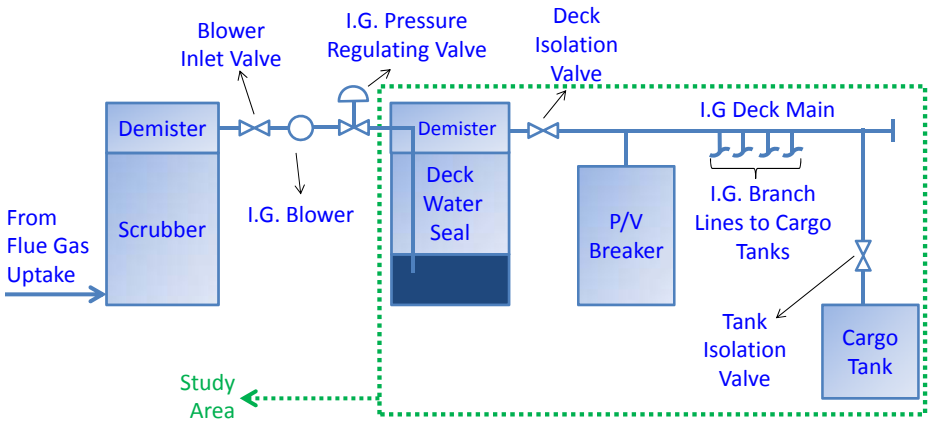

ILTA 34TH ANNUAL INTERNATIONAL OPERATING CONFERENCE & TRADE SHOW JUNE 2-4 2014

Study Area – Inert Gas System

Deck Water Seal

Study Area – IGS

P/V Breaker

Deck Isolation Valve

ILTA 34TH ANNUAL INTERNATIONAL OPERATING CONFERENCE & TRADE SHOW JUNE 2-4 2014

Study Area – Inert Gas System

Tank Isolation Valve

Study Area – Vapor Collection System

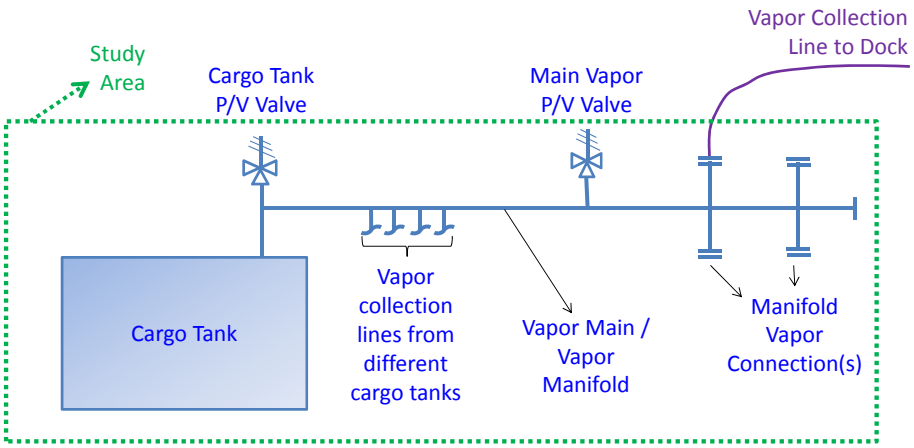

ILTA 34TH ANNUAL INTERNATIONAL OPERATING CONFERENCE & TRADE SHOW JUNE 2-4 2014

Study Area – Vapor Collection System

Pressure Vacuum (P/V) Valves

Study Area – Vapor Collection System

Manifold Vapor Connections

ILTA 34TH ANNUAL INTERNATIONAL OPERATING CONFERENCE & TRADE SHOW JUNE 2-4 2014

Study Area – Cargo Tank Access Points

Tank Top

Study Area – Cargo Tank Access Points

Tank Cleaning Machine

** Photo on right from http://www.tankcleaning.de/*

ILTA 34TH ANNUAL INTERNATIONAL OPERATING CONFERENCE & TRADE SHOW JUNE 2-4 2014

Study Area – Cargo Tank Access Points

Sample/Gauging Access Point and Radar Level Gauge

Study Area – Cargo Tank Access Points

Access Plate

ILTA 34TH ANNUAL INTERNATIONAL OPERATING CONFERENCE & TRADE SHOW JUNE 2-4 2014

Study Design – Leak Detection Methods

Modified EPA Method 21

Infrared Gas Imaging

Study Design – Leak Detection Methods

Modified EPA Method 21

- Standard LDAR monitoring technique
- Thorough, but time-consuming and labor intensive method
- Use FID (TVA-1000, PHX21) or PID (MiniRae)
- All intrinsically safe
- Leak definition of 500 ppbc is very conservative

ILTA 34TH ANNUAL INTERNATIONAL OPERATING CONFERENCE & TRADE SHOW JUNE 2-4 2014

Study Design – Leak Detection Methods

FLIR GF320

- Visualize gas leaks in real time
- Spot leaks close by or meters away
- Very fast and very sensitive
- Not intrinsically safe – as such is not always allowed on board vessel *(DON'T CALL IT A CAMERA!)*

Study Design – Leak Measurement Method

Measuring a leaking tank cleaning machine

Bacharach Hi Flow Sampler

- Designed to measure the rate of natural gas leakage around various components
- Samples at a very large flow rate (up to 250 LPM) to completely capture any gas leaking from the component
- By measuring sample flow rate and leak concentration, the leak rate can be calculated

ILTA 34TH ANNUAL INTERNATIONAL OPERATING CONFERENCE & TRADE SHOW JUNE 2-4 2014

Study Design – Leak Measurement Method

Bacharach Hi Flow Sampler

- Yields measurement results relatively fast (2-5 minutes)
- Utilizes a dual detector (catalytic oxidizer/thermal detector)
- The Hi Flow has a measurement sensitivity of 0.1 LPM methane (equivalent to 4.3 g of hydrocarbon/hour)
- Intrinsically safe

Measuring a leaking P/V valve

Study Design – Other Data Collection

- Also needed to collect the following data
  - Cargo tank pressures during loading
  - Loading rates (bbl/hour)
  - Copy of the vessel's most recent vapor tightness certificate
  - Temperature of product in cargo tanks
  - Ship particulars (age, dimensions, etc.)
  - Vapor pressure of product being loaded
- "Test Plan for the Direct Measurement of Uncollected VOC Loading Losses during Marine Vessel Loading" was submitted to the TCEQ Air Permits Division for review and was approved on June 4, 2013.

ILTA 34TH ANNUAL INTERNATIONAL OPERATING CONFERENCE & TRADE SHOW JUNE 2-4 2014

Study Design

- Tested three tankers at the Kinder Morgan Terminal in Galena Park, TX
- Loading gasoline blendstock
- Loading volume of approximately 300,000 bbl

** Photo from Marinetraffic.com*

Results – Test 1 - Overview

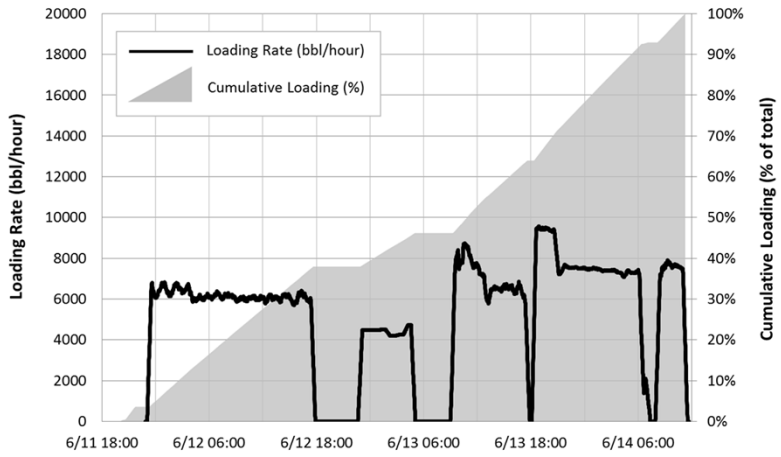

ILTA 34TH ANNUAL INTERNATIONAL OPERATING CONFERENCE & TRADE SHOW JUNE 2-4 2014

Results – Test 2 - Overview

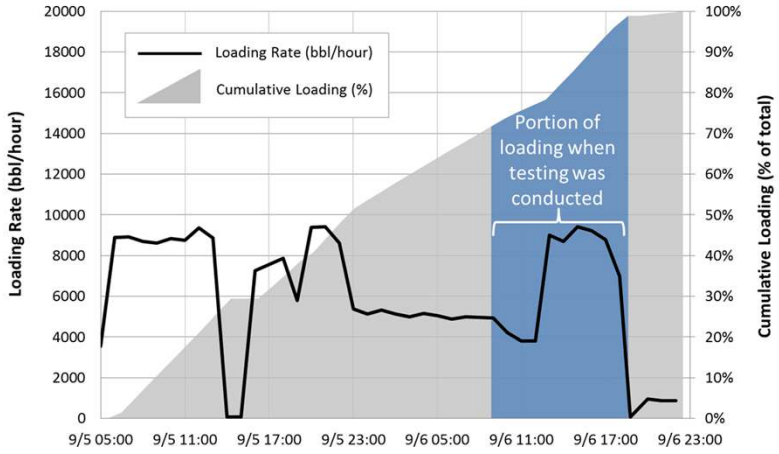

Results – Test 3 - Overview

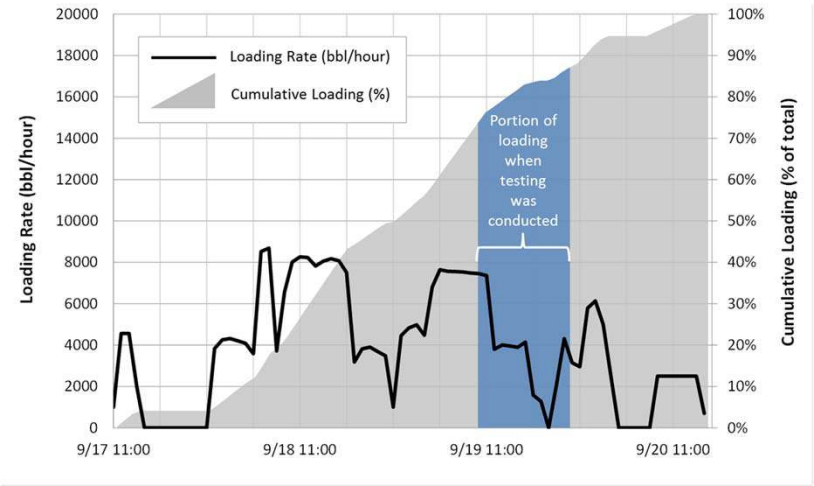

ILTA 34TH ANNUAL INTERNATIONAL OPERATING CONFERENCE & TRADE SHOW JUNE 2-4 2014

Results

Parameter	Tanker Name		
	Atlantic Pisces	Apollon	Norient Solar
Year Built	2009	2005	2008
Load Volume (barrels)	305,000	253,000	295,400
Load Duration (hours)	64	42	79
Testing Duration (hours)	64	12	12
Number of Components Monitored	109	130	108
Number of Components with a Detectable Leak Rate	9	3	10
Total Uncollected/Fugitive Emissions (lbs.)	5.2	34.2	17.3
Total Collected Emissions (tons)	17.9	12.7	17.0
Collection Efficiency	99.985%	99.865%	99.949%

Results – What leaks?

- Majority of significant leaks were associated with
  - Vapor Collection System
    - P/V valves
    - Manifold Vapor Connection
  - Tank Tops
- IGS system does not appear to be a significant leak source

ILTA 34TH ANNUAL INTERNATIONAL OPERATING CONFERENCE & TRADE SHOW JUNE 2-4 2014

Results – Leaking Vapor Connection

Results – Leaking Vapor Connection

ILTA 34TH ANNUAL INTERNATIONAL OPERATING CONFERENCE & TRADE SHOW JUNE 2-4 2014

Results – Leaking Tank Tops

Results – Leaking Access Plate

ILTA 34TH ANNUAL INTERNATIONAL OPERATING CONFERENCE & TRADE SHOW JUNE 2-4 2014

Results – NSR Permitting

- Site specific emission factor approved to reflect increased collection efficiency
- Reduction in required ERCs between 250 and 300 tons
- Estimated cost savings between $75 and 92 million

ILTA 34TH ANNUAL INTERNATIONAL OPERATING CONFERENCE & TRADE SHOW JUNE 2-4 2014

Questions? For more information:

Brian Cochran

URS

Austin, TX

brian.cochran@urs.com

Shanon DiSorbo

DiSorbo Consulting

Responsive | Engineering | Solutions

1010 Travis Street, Suite 916

Houston, Texas 77002

713-955-1225 (direct)

281-513-5886 (cell)

sdisorbo@disorboconsult.com