WESTRIDGE MARINE TERMINAL LIGHT EMISSIONS IMPACT ASSESSMENT REPORT

WESTRIDGE MARINE TERMINAL UPGRADE AND EXPANSION PROJECT APPLICATION TO VANCOUVER FRASER PORT AUTHORITY

Trans Mountain Pipeline ULC
Kinder Morgan Canada Inc.
Suite 2700, 300 – 5 Avenue S.W.
Calgary, Alberta T2P 5J2
Ph: 403-514-6400

May 2017

LIGHT EMISSIONS MANAGEMENT PLAN FOR THE TRANS MOUNTAIN PIPELINE ULC TRANS MOUNTAIN EXPANSION PROJECT NEB CONDITION 82

May 2017
REV 2
01-13283-TW-WT02-STE-RPT-0004 R2

[redacted]

Prepared for:

TRANSMOUNTAIN

Trans Mountain Pipeline ULC

Kinder Morgan Canada Inc.
Suite 2700, 300 – 5th Avenue S.W.
Calgary, Alberta T2P 5J2
Ph: 403-514-6400

VISUAL GUIDE TO TMEP'S ENVIRONMENTAL PLANS TO THE NEB CONDITIONS RELATED TO THE ENVIRONMENTAL PROTECTION PLAN

Trans Mountain's environmental program during construction is presented in ten volumes of the Environmental Plans as shown in the visual guide below. The Environmental Plans will be implemented by contractors and Environmental Inspectors during all phases of construction. Consequently the ten volumes of plans cover all aspects of Environmental Management. To demonstrate compliance with NEB Conditions, Trans Mountain will file the Environmental Plans with the NEB. To clarify how TMEP's Environmental Plan Volumes relate to Condition documents filed with the NEB please see the table below.

Trans Mountain Expansion Project Guide to the Environmental Plans

Environmental Plans	NEB Condition and Filing ID
Volume 1 – Temporary Construction Lands and Infrastructure Environmental Protection Plan	78 Facilities Environmental Protection Plan
Volume 2 – Pipeline Environmental Protection Plan	72 Pipeline Environmental Protection Plan
Volume 3 – Facilities Environmental Protection Plan	78 Facilities Environmental Protection Plan
Volume 4 – Westridge Marine Terminal Environmental Protection Plan	81 Westridge Environmental Protection Plan
Volume 5 – Reactivation Environmental Protection Plan	72 Pipeline Environmental Protection Plan
Volume 6 – Environmental Management Plans	72 Pipeline Environmental Protection Plan 78 Facilities Environmental Protection Plan 81 Westridge Environmental Protection Plan
Volume 7 – Resource-Specific Mitigation Tables	72 Pipeline Environmental Protection Plan
Volume 8 – Environmental Alignment Sheets	72 Pipeline Environmental Protection Plan
Volume 9 – Burnaby Mountain Tunneling Environmental Protection Plan	72 Pipeline Environmental Protection Plan
Volume 10 – Compliance Management Plan	72 Pipeline Environmental Protection Plan 78 Facilities Environmental Protection Plan 81 Westridge Environmental Protection Plan

This plan forms part of Volume 6 and is located:

Volume 6 – Environmental Management Plans		NEB Condition and Filing ID
Section 1 – Organizational Structure	1.1 - Project Organizational Structure	Condition 88
Section 2 – Socio–Economic Management	2.1 - Access Management Plan	Condition 47 A82635
	2.2 - Agricultural Management Plan	Condition 72
	2.3 - Socio-Economic Effects Monitoring Plan	Condition 13 A81754
	2.4 – Heritage Resources	Condition 100
	2.5 – Biosecurity Management Plan	Condition 72
	2.6 – Socio-Economic Management Plan	Condition 72
	2.7 – Worker Accommodation Strategy	Condition 59
Section 3 – Contaminated Sites and Waste Management	3.1 - Waste Management Plan	Condition 72
	3.2 - Contamination Identification and Assessment Plan	Condition 46 A82636
	3.3 - Hydrovac Cutting and Disposal Management Plan	Condition 72
Section 4 – Geological and Groundwater Management	4.1 - Metal Leaching and Acid Rock Drainage Management Plan	Condition 72
	4.2 – Groundwater Management Plan	Condition 72
Section 5 – Vegetation Management	5.1 - Timber Salvage Management Plan	Condition 72
	5.2 - Old Growth Management Areas Mitigation and Replacement Plan	Condition 76
	5.3 - Rare Ecological Community and Rare Plant Population Management Plan	Condition 40
	5.4 - Grasslands Survey and Mitigation Plan	Condition 42 A82362
	5.5 - Weed and Vegetation Management Plan	Condition 45 A82634
Section 6 – Wildlife Management Plans	6.1 – Preliminary Caribou Habitat Restoration Plan	Condition 37 A81921
	6.2 – Sowaqua Spotted Owl Mitigation Plan	Condition 38 A81923
	6.3 – Grizzly Bear Mitigation Plan	Condition 56
	6.4 – Wildlife Species at Risk Mitigation and Habitat Restoration Plans	Condition 44
	6.4.1 – American Badger Mitigation Plan	Condition 44
	6.4.2 – Barn Owl Mitigation Plan	Condition 44
	6.4.3 – Coastal Giant Salamander Mitigation Plan	Condition 44
	6.4.4 – Great Basin Spadefoot Mitigation Plan	Condition 44
	6.4.5 – Williamson's Sapsucker and Lewis's Woodpecker Mitigation Plan	Condition 44
	6.4.6 – Oregon Forestsnail Mitigation Plan	Condition 44
	6.4.7 – Oregon Spotted Frog Mitigation Plan	Condition 44
	6.4.8 – Pacific Water Shrew Mitigation Plan	Condition 44
	6.4.9 – Western Rattlesnake and Great Basin Gophersnake Mitigation Plan	Condition 44
	6.4.10 – Townsend's Mole Mitigation Plan	Condition 44
	6.4.11 – Western Screech–Owl Mitigation Plan	Condition 44

Volume 6 – Environmental Management Plans		NEB Condition and Filing ID
Section 7 – Wetland Management	7.1 - Wetland Survey and Mitigation Plan	Condition 41
Section 8 – Aquatic Resource Management	8.1 - Nooksack Dace and Salish Sucker Management Plan	Condition 75
	8.2 - Water Quality Monitoring Management Plan	Condition 72
	8.3 - HDD/Trenchless Planning and Procedures Management Plan	Condition 72
	8.4 - Horizontal Directional Drilling Noise Management Plan	Condition 74
	8.5 - Navigation and Navigation Safety Plan	Condition 48 A82632
	8.6 - Water Withdrawal and Discharge Procedures Management Plan	Condition 72
	8.7 - Riparian Habitat Management Plan	Condition 71
	8.8 - Watercourse Crossing Inventory	Condition 43 A82366, A82369, A82390, A82392, A82395, A82397, A82400, A82405, A82409
Section 9 – Reclamation Plans	9.1 – Reclamation Management Plan	Condition 72
	9.2 - British Columbia Parks Reclamation Plan	Condition 72
	9.2.1 - Finn Creek Provincial Park Land Use/Occupancy Park Use Permit Application	Condition 72
	9.2.2 - Lac du Bois Grasslands Protected Area Land Use/Occupancy Park Use Permit Application	Condition 72
	9.2.3 - Coquihalla Summit Recreation Area Land Use/Occupancy Park Use Permit Application	Condition 72
	9.3 – Wabamun Park Reclamation Plan	Condition 72
Section 10 – Facilities Management Plans	10.1 - Air Emissions Management Plan for the Edmonton, Sumas, and Burnaby Terminals	Condition 79
	10.2 - Noise Management Plan for Construction at Terminals and Pump Stations	Condition 80
	10.3 - Air Emissions Management Plan for Westridge Marine Terminal	Condition 52 A82640
	10.4 – Marine Water Quality Management Plan during Rip Rap Removal	Condition 35
	10.5 - Fugitive Emissions Management Plan for the Edmonton, Sumas, and Burnaby Terminals	Condition 54
	10.6 - Fugitive Emissions Management Plan for Westridge Marine Terminal	Condition 53 A82637
	10.7 - Fugitive Emissions Management Plan for Pump Stations	Condition 55
	10.8 - Light Emissions Management Plan	Condition 82
Section 11 – Burnaby Mountain Tunneling Management	11.1 - Air Emissions Management Plan for Burnaby Mountain Tunnel Construction	Condition 85
	11.2 - Burnaby Mountain Tunnel Construction Noise Management Plan for Burnaby Mountain	Condition 86
	11.3 - Groundwater Seepage Management Plan	Condition 87

TABLE OF CONCORDANCE

NEB Condition 82 is applicable to legal instrument: OC-064 (CPCN). Table 1 below describes how this Plan addresses the requirements applicable to Project activities.

Table 1 Legal Instrument Concordance with NEB Condition 82: Light Emission Management Plan

NEB Condition 82		OC-064 (CPCN)
Light Emissions Management Plan for the Westridge Marine Terminal		
a)	a summary of the results of an area lighting study, including how potential impacts on surrounding communities and safety and operational requirements were considered.	Section 3.0; Appendix A
b)	a description of the mitigation and best practice measures considered for the terminal lighting design and how the proposed design and operation will minimize the impacts from light on land-based residents and marine users.	Section 4.0.
c)	a summary of its consultations with Port Metro Vancouver, as well as copies of all written comments that may be provided to Trans Mountain by Port Metro Vancouver. In its summary, Trans Mountain must provide a description and justification for how Trans Mountain has incorporated the results of its consultation, including any recommendations from Port Metro Vancouver, into the Plan.	Appendix B
d)	a plan for how Trans Mountain will communicate its proposed terminal lighting design and associated mitigation measures to limit any nuisance lighting disturbances to land-based residents and marine users.	Section 5.1; Section 5.2

EXECUTIVE SUMMARY

Trans Mountain Pipeline ULC (Trans Mountain) submitted a Facilities Application (the Application) to the National Energy Board (NEB) in December 2013 for the Trans Mountain Expansion Project ("the Project" or "TMEP"). On November 29, 2016, the Governor in Council concluded the Project was in the public interest of Canada. A Certificate of Public Convenience and Necessity (CPCN) allowing the Project to proceed, subject to 157 conditions, was issued on December 1, 2016.

The Light Emission Management Plan (LEMP or the Plan) is prepared to meet the requirements of NEB Condition 82.

Lighting itself is not considered a pollutant, but poor or badly designed facility lighting can lead to obtrusive lighting effects for nearby receptors and marine users. The LEMP herein describes:

- Regulatory setting for design of outdoor lighting and managing outdoor lighting
- A summary of a lighting impact study completed for the Westridge Marine Terminal (WMT)
- Management procedures for ensuring proper facility lighting during construction and operation to avoid obtrusive lighting wherever possible
- A summary of consultations between Trans Mountain and the Vancouver Fraser Port Authority (VFPA) that shows a commitment to lighting design using established best practices
- A notification and complaints process to address stakeholders' concerns

The LEMP is intended to provide personnel at the WMT a means of properly administering outdoor light during construction and operation, and outlines responsibilities for all personnel onsite. The LEMP is structured for revision as new information becomes available or conditions change, and as parties responsible for its upkeep change.

The information in this Plan will be included in the updated Environmental Protection Plan (EPP) prepared for the Project to ensure that the mitigation and restoration measures are implemented. Additionally, the results of any post-construction monitoring will be provided in the post-construction environmental monitoring reports to be filed by Trans Mountain as per NEB Condition 151.

TABLE OF CONTENTS

Page

VISUAL GUIDE TO TMEP'S ENVIRONMENTAL PLANS TO THE NEB CONDITIONS RELATED TO THE ENVIRONMENTAL PROTECTION PLAN III
Trans Mountain Expansion Project Guide to the Environmental Plans iii
TABLE OF CONCORDANCE VI
EXECUTIVE SUMMARY VII
1.0 INTRODUCTION 1
1.1 Purpose and Scope 1
1.2 Project Description 2
1.3 Regulatory Guidance 2
2.0 CONSULTATION AND ENGAGEMENT 4
2.1 Public Consultation 4
3.0 ASSESSING LIGHT EFFECTS FROM THE WESTRIDGE MARINE TERMINAL EXPANSION 5
3.1 Potential Effects from Obtrusive Lighting 5
3.2 Westridge Marine Terminal Light Emission Impact Assessment 6
3.3 Assessment Criteria for LEIA 7
3.4 Baseline Monitoring Results 7
3.5 Lighting Design 7
3.6 Results and Discussion 8
4.0 LIGHT EMISSION MANAGEMENT PROCEDURES 8
4.1 Construction 8
Description of Activities 8
Vehicle Mounted Equipment 8
Construction Barge 9
Portable Light Plants 9
4.2 Operation 9
Description of Activities 9
Vessel Navigation, Vessel at Anchor, and Vessels at Birth 9
Terminal and Foreshore Activities 10
5.0 COMMUNICATION PLANS 10
5.1 Public Engagement Plan 10
5.2 Complaint Response Plan 10
6.0 SUMMARY 11
7.0 REFERENCES 11

LIST OF APPENDICES

Appendix A Light Emissions Impact Assessment
Appendix B VFPA Consultation Summary

LIST OF FIGURES

Figure 1 Satellite View of Proposed Terminal Footprint and Nearby Anchorages 3

LIST OF TABLES

Table 1 Legal Instrument Concordance with NEB Condition 82: Light Emission Management Plan vi
Table 2 Summary of Scoping Requirements for the LEMP 4
Table 3 Summary of Public Consultation—November 2016 to April 2017 4
Table 4 Description of Obtrusive Light Attributes 5
Table 5 Recommended Maximum Values of Light Trespass and Glare for E3 Environmental Zones 7
Table 6 Recommended Maximum Values of Light Trespass and Glare for E3 Environmental Zones 7

1.0 INTRODUCTION

Trans Mountain Pipeline ULC (Trans Mountain) submitted a Facilities Application (the Application) to the National Energy Board (NEB) in December 2013 for the Trans Mountain Expansion Project ("the Project" or "TMEP"). On November 29, 2016, the Governor in Council concluded the Project was in the public interest of Canada. A Certificate of Public Convenience and Necessity (CPCN) allowing the Project to proceed, subject to 157 conditions, was issued on December 1, 2016.

The Light Emission Management Plan (LEMP or the Plan) was prepared to meet the requirements of NEB Condition 82.

Outdoor lighting is critical for industrial developments to ensure safety of workers, and to provide security for workers and the facility. However, inappropriately designed lighting or excessive lighting can cause effects ranging from a minor nuisance to a disruptive environmental effect. Lighting fixtures, luminaires, and navigational aids used during the construction and operation of the Westridge Marine Terminal (WMT) have the potential to cause obtrusive light impacts on nearby residents or marine users. The LEMP therefore includes best management procedures, mitigation measures, and design plans to reduce potential offsite light impacts wherever possible.

1.1 Purpose and Scope

The purpose of the LEMP is to provide information and analysis with respect to lighting impacts and lighting mitigation and management practices to address the requirements of NEB Condition 82. Condition 82 requirements include:

- A summary of the results of an area lighting study, including how potential impacts on surrounding communities and safety and operational requirements were considered
- A description of the mitigation and best practice measures considered for the terminal lighting design and how the proposed design and operation will minimize the impacts from light on land-based residents and marine users
- A summary of consultation with Vancouver Fraser Port Authority (VFPA), as well as copies of all written comments that may be provided to Trans Mountain by VFPA.[1] In its summary, Trans Mountain must provide a description and justification for how Trans Mountain has incorporated the results of its consultation, including any recommendations from VFPA, into the plan
- A plan for how Trans Mountain will communicate its proposed terminal lighting design and associated mitigation measures to limit any nuisance lighting disturbances to land-based residents and marine users

The LEMP is also designed to:

- Provide a process for documenting concerns of improper lighting and mitigation measures to be taken
- Provide a reference for personnel when planning or executing activities associated with exterior lighting
- Provide a reference for personnel to understand regulatory requirements for exterior lighting

[1] Condition 82(c) requires Trans Mountain to provide a summary of consultations with Port Metro Vancouver. Note that Port Metro Vancouver is referred to in this document by its legal name, Vancouver Fraser Port Authority.

1.2 Project Description

Trans Mountain filed its Application with the NEB in December 2013. In developing its Application, Trans Mountain commenced a program of extensive discussions with landowners, engagement with Aboriginal groups and consultation with affected stakeholders. This program was intended to gather input from these groups into the Application and supporting Environmental and Socio-Economic Assessment (ESA), and to continue to assist Trans Mountain in the design and execution of the Project. Trans Mountain is also working with Appropriate Government Authorities to carry out the necessary reviews, studies and assessments required for the Project.

A Satellite image of the existing and proposed terminal layout, along with existing anchorage locations, is shown in Figure 1.

1.3 Regulatory Guidance

Currently there no legally binding requirements in British Columbia (BC), or federally, to regulate obtrusive light being emitted from facilities. However, permitting for the WMT expansion is required from the VFPA. The VFPA has published guidelines that inform and guide the design, installation, and operation of lighting proposed by projects undergoing its project and environmental review process (VFPA 2015). The VFPA review process includes a requirement to complete a light emission impact assessment of the expanded terminal operations.

V:\1214\active\1XXX - Other PCs\1232xxxxx\123220258 Westridge Lighting Assessment\geomatics\mapping\mxd\report\123220258-001 Project Location.mxd krozalska

Sources: ESRI
Service Layer Credits: Sources: Esri, HERE, DeLorme, Intermap, increment P Corp., GEBCO, USGS, FAO, NPS, NRCAN, GeoBase, IGN, Kadaster NL, Ordnance Survey, Esri Japan, METI, Esri China (Hong Kong), swisstopo, MapmyIndia, © OpenStreetMap contributors, and the GIS User Community

Disclaimer: This map is for illustrative purposes to support this Stantec project; questions can be directed to the issuing agency.

Satellite View of Proposed Terminal Footprint and Nearby Anchorages

Stantec

WESTRIDGE LIGHTING ASSESSMENT

Figure 1

A summary of scoping requirements for the LEMP is included below in Table 2.

Table 2 Summary of Scoping Requirements for the LEMP

Government Department or Agency	Document	Requirement
National Energy Board	National Energy Board Condition 82	Light Emission Management Plan containing: • Light Impact Assessment Summary • Best practices and mitigation for lighting • Documentation of consultations with VFPA • Communication Plan for Lighting
Vancouver Fraser Port Authority	Westridge Marine Terminal Expansion Light Emission Impact Assessment	Light Emission Impact Assessment containing: • Predicted light levels from project activities • Description of effects of marine terminal lighting on aid to navigation • Analysis of sufficient aids to navigation for the marine terminal

2.0 CONSULTATION AND ENGAGEMENT

Consultation and engagement activities related to the LEMP were conducted between November 2016 and February 2017 with Appropriate Government Authorities, potentially affected Aboriginal groups and members of the community. Opportunities to discuss the LEMP and to identify issues or concerns were provided to public stakeholders through the Trans Mountain website, workshops, meetings and ongoing engagement activities during the reporting period.

The draft LEMP was released on February 8, 2017 for review and feedback. Feedback was requested by April 7, 2017. Feedback received on the draft LEMP is summarized in Section 2.1. Trans Mountain acknowledged feedback and has provided information as to where additional technical context can be found, as summarized in Table 3.

Engineering design changes were issued in the TMEP Fall 2016 Project Update document (www.transmountain.com/environmental-plans) along with a request for feedback. All of the design updates have been reviewed, and the Project design updates that are relevant have been incorporated into this LEMP.

2.1 Public Consultation

Feedback regarding the LEMP received during public consultation, engagement activities and the review period for the LEMP between November 2016 and April 2017 is summarized in Table 3.

Table 3 Summary of Public Consultation—November 2016 to April 2017

Issue or Concern	Summary Trans Mountain Response	Where Addressed
Concerns about light pollution due to tankers and increase with the expansion	In response to the NEB Condition 82 Trans Mountain prepared an LEMP, with an appended light emissions impact assessment (LEIA). The LEIA assessed potential impacts of Project lighting on residential receptors, while the LEMP describes measures to minimize adverse lighting effects from the Project. With the inclusion of mitigation measures, including appropriate lighting design, lighting from the expanded terminal will not result in a change ambient lighting conditions related to light trespass, glare, or sky glow beyond acceptable ambient lighting conditions for a suburban environment. However, depending on their orientation, glare from anchored oil tankers could exceed standards. Tanker deck lighting is required for safety and security. Trans Mountain will work with tanker operators to minimize potential lighting requirements while at anchor or at berth	Section 4.0 (LEMP); Appendix A

Table 3 Summary of Public Consultation—November 2016 to April 2017

Issue or Concern	Summary Trans Mountain Response	Where Addressed
Interest in more information about lighting management and impact / mitigation on marine life and birds; consider providing funding to the hatcheries so they can release more fish to make up for ones lost due to predation as a result of night lighting	Industrial and residential developments along the shoreline of Burrard Inlet currently produce lighting that could affect fish, birds, and other wildlife. The construction of the Westridge Marine Terminal expansion is expected to result in a marginal change to the overall existing lightscape. Pile driving during construction will be limited to daylight hours. Other lighting will be applied utilizing directional and task-oriented LED and/or shielded lights. These measures will limit the amount of light reaching nearshore surface waters around the Terminal. The birds most affected by light attraction (i.e., Order Procellariiformes) are not expected to interact with Terminal-related lighting because they do not use Burrard Inlet.	Trans Mountain's Application for *Fisheries Act* Authorization for the Westridge Marine Terminal (17-HPAC-00071)

3.0 ASSESSING LIGHT EFFECTS FROM THE WESTRIDGE MARINE TERMINAL EXPANSION

3.1 Potential Effects from Obtrusive Lighting

Three attributes that are commonly used to describe obtrusive lighting: light trespass, glare, and sky glow. These attributes are described below in Table 4

Table 4 Description of Obtrusive Light Attributes

Obtrusive Lighting	Photo Example
Light Trespass: The transmission of light from fixtures within a facility to the environment and sensitive receptors outside the facility. Incident light mainly becomes problematic when lights located on the outside of a facility shine in through the windows of nearby residential homes at levels that can potentially disrupt sleep, or distract from normal levels of lighting.	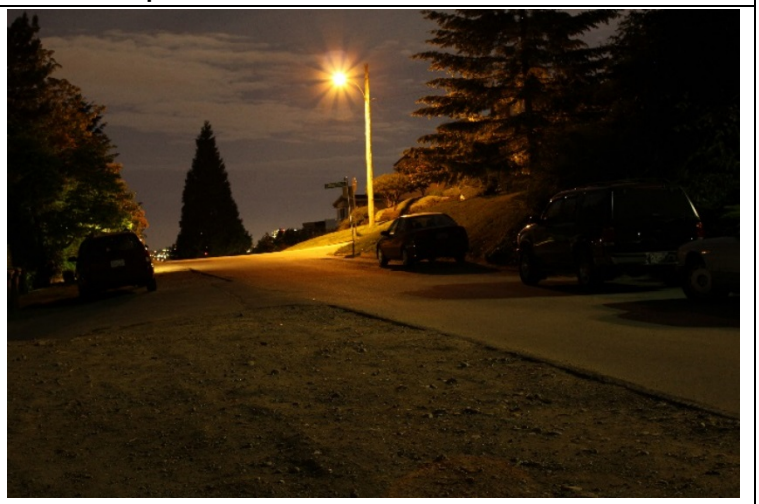 Light trespass from neighborhood lighting in Capitol Hill area.

Table 4 Description of Obtrusive Light Attributes

Obtrusive Lighting	Photo Example
Glare: Potential environment effect in which intense, harsh, or contrasting lighting conditions can reduce the ability to see. A common example of glare is the oncoming high-beam headlights that provide ample light to the high beam user, but can momentarily disable drivers of oncoming traffic. For vessels, reflections of light from the water are an additional source of glare that is most intense during calm conditions.	 Glare from tanker vessel anchored in Burrard Inlet in calm conditions
Sky Glow: Illumination of the sky or clouds by light sources on the surface of the earth such as street lighting, and haze in the atmosphere that replaces the natural night time sky with a translucent to opaque lighting dome. Sky glow is the cumulative effect of lights either emitting upward, or being reflected upward by the surface plus the emission from photochemical activity in the atmosphere.	 Sky glow over Dollarton area from urban lighting

3.2 Westridge Marine Terminal Light Emission Impact Assessment

A LEIA was conducted to fulfill permit and regulatory requirements for the NEB and the VFPA. The LEIA report is provided in Appendix A and a summary of the results of this assessment are provided in the following paragraphs.

The LEIA consisted of the following:

- Conducting baseline light monitoring to characterize the ambient light levels in and surrounding the location of the WMT
- Predicting light trespass and glare levels resulting from the operation of the WMT using the WMT light design
- Assessing whether the WMT, as currently designed, would exceed relevant guideline criteria, and identifying potential effects on nearby receptors

3.3 Assessment Criteria for LEIA

In the absence of regulatory criteria for lighting, the Commission Internationale de l'Éclairage (CIE) has developed international guideline levels for light trespass and glare (CIE 2003). These guideline levels formed the basis for lighting design guidelines developed by the Illuminating Engineering Society (IES) and the International Dark Sky Association (IDA), which informed the design of the WMT expansion. The guideline levels are scaled based on both the time of day (evening versus overnight) and level of urbanization to reflect the understanding that people living in areas with different levels of development have varying expectations of lighting levels at night. The CIE guidelines levels for light trespass and glare were used to assess the lighting design for the WMT (refer to Table 5).

Table 5 Recommended Maximum Values of Light Trespass and Glare for E3 Environmental Zones

Zone	Surrounding	Lighting Environment	Max Values for Light Trespass (lux)		Max Values for Glare (candela)	
			Time of Day		Time of Day	
			1900–2300	2300–0600	1900–2300	2300–0600
E1	Natural	Intrinsically dark	2 lux	0 lux	2500 cd	0 cd
E2	Rural	Low distinct brightness	5 lux	1 lux	7,500 cd	500 cd
E3	Suburban	Medium distinct brightness	10 lux	2 lux	10,000 cd	1,000 cd
E4	Urban	High distinct brightness	25 lux	5 lux	25,0000 cd	2,500 cd

3.4 Baseline Monitoring Results

Baseline monitoring results at four locations near the WMT indicated lighting levels at nearby receptors were consistent with the suburban lighting environment (CIE guidelines level E3). Table 6 summarizes the guideline levels for light trespass and glare used in the LEIA for the WMT operations.

Table 6 Recommended Maximum Values of Light Trespass and Glare for E3 Environmental Zones

Time of Day	Light Trespass	Glare
19:00–23:00	10 Lux	10,000 cd
23:00–6:00	2 Lux	1,000 cd
SOURCE: CIE 2003		

3.5 Lighting Design

The lighting design for the WMT was completed by Trans Mountain (Moffat and Nichol 2016) and was based on the Front End Engineering Design (FEED) study. The WMT light design includes both the marine terminal and foreshore areas as well as lighting from the tanker vessels at berth and at anchor. The lighting design was developed in accordance with the following standards and guidelines in part to fulfill commitments made by Trans Mountain as part of the EA process:

- VFPA Project and Environmental Review, Guidelines—Lighting (2015)
- Illumination Engineering Society (IES) RP-33-14, Lighting for Exterior Environments
- IES TM-10-1000, Addressing Obtrusive Light
- IES HB-10-11, The IES Lighting Handbook
- IES F-1-03, Guideline for Security Lighting for People, Property, and Public Spaces
- IES RP-8-14, Roadway Lighting

Trans Mountain reviewed and considered the VFPA lighting guidelines in the lighting design of WMT as recommended through direct consultation with the VFPA. In general the VFPA encouraged the use of appropriate equipment and also suggested Trans Mountain engage with their energy manager as the lighting design is refined. The entire WMT Light Emissions Management Plan was filed with the VFPA for

review and comment as part of the WMT development permit, submitted in February 2017. Please refer to Appendix B for a summary of consultation records between Trans Mountain and the VFPA.

3.6 Results and Discussion

The results of the LEIA indicate that illuminance levels for the WMT operations will be well below the CIE guidelines for suburban areas. Glare values for the marine terminal and foreshore areas will also be below the CIE guideline levels. However, glare from deck lighting on the tanker vessels at berth and at anchor may exceed CIE guidelines depending on the orientation of the tanker vessel relative to receptors the exact design of the vessel's lighting and the prevalent wind and wave conditions. Deck lighting is a safety requirement as well as required for security purposes. According to the *International Convention on the International Regulations for Preventing Collisions at Sea, 1972*, which are also adopted in Canada, vessels at anchor shall also use the available working or equivalent lights to illuminate her decks.

Trans Mountain does not have operational control over vessels but through its Tanker Acceptance Standard already requires vessels to adhere to the directions provided in the Port of Vancouver's Port Information Guide regarding the use of lights, namely that deck lights must be kept to a minimum consistent with the safety and security of the vessel, and lighting used to illuminate a vessel's decks must be aimed downward, and not outward or toward the shore. In future Trans Mountain will further request vessel operators to reduce instances of excessive glare by minimizing exterior deck lighting wherever possible. This initiative is further outlined in subsequent sections of this LEMP (Section 4.0).

4.0 LIGHT EMISSION MANAGEMENT PROCEDURES

The construction and operation of the WMT will employ best management practices and mitigation measures to minimize the potential impacts from Project lighting on nearby receptor locations and marine users. This includes adherence to guidelines provided by the IES, CIE, IDA, and the VFPA in the design of the WMT discussed in Section 3.5.

4.1 Construction

Description of Activities

Construction of the WMT expansion is expected to occur between August 2017 and December 2019. Construction activities will occur along the marine areas to install new berths, and on the foreshore areas to accommodate new loading and offloading equipment. Construction will include demolition of some existing facilities to accommodate the footprint of the new berths at the terminal, and reclamation of onshore areas.

Construction activities will include the use of earth moving equipment, such as bulldozers, dump trucks, and excavators; and construction barges executing pile driving and other minor marine works. Lighting will be installed on all mobile equipment used for construction at night. Mobile light plants will also be used for additional areas for task lighting at night.

Vehicle Mounted Equipment

Potential Lighting Concerns

Lighting on earth moving equipment is typically installed higher than on other road vehicles, and has the potential to lead to intermittent glare effects for oncoming traffic and residential receptors.

Light Management Procedures

a. Use earth moving equipment with properly installed and functioning light fixtures to avoid the use of secondary lighting with higher glare characteristics, and make vehicles clearly visible during construction activities and while in transit to/from the construction site.
b. Minimize, where possible the use of vehicle lighting except where required for work tasks or during transit.
c. Avoid idling with lights pointing in the direction of sensitive receptors wherever possible.
d. Plan laydown areas so lighting from mobile equipment is directed away from sensitive receptors.

Construction Barge

Potential Lighting Concerns

Lighting on the construction barge could lead to excessive light spill or glare depending on lighting type and where the fixtures are installed. Light reflecting off the water may contribute to glare but will vary depending on the prevalent wind and wave conditions.

Light Management Procedures

a. Use properly installed and functioning light fixtures on the construction barge to avoid the use of secondary lighting with higher glare characteristics.
b. Operate the barge with proper navigation lighting during construction activities and while in transit to/from the construction site.
c. Minimize or avoid the use of barge lighting except for work tasks.
d. Orient the construction barge to make use of vegetation and terrain obstructions wherever possible to reduce the possibility of excessive glare and light trespass to nearby receptors.

Portable Light Plants

Potential Lighting Concerns

Lighting during construction is expected to be provided by portable light plants with the ability of orienting light towards the active work area. Light plants are typically composed of 4 x 1,000 W metal halide luminaires attached to retractable masts. The portable nature of these light sources make them prone to high levels of light trespass and glare if their use is not properly managed and executed.

Light Management Procedures

a. Place fixtures high enough so the reflectors can be pointed downward, rather than sideways, so that only the working area is illuminated.
b. Place fixtures, to the extent possible, on the side of the construction activity such that the unavoidable light spill off the working area is not directed toward residential or light sensitive areas.
c. Avoid directing lights toward the eyes of drivers on roads onsite or offsite.
d. Only operate portable light plants when necessary for specific construction tasks.
e. Install motion-activated security lighting in place of construction lighting where possible.

4.2 Operation

Description of Activities

The expanded WMT facilities is expected to commence operations from the end of 2019. The main activities that are expected to take place at the WMT will include loading of crude oil on tanker and barge vessels and offloading jet fuel from barges. Activities in the foreshore will occur near the existing tanks and new support infrastructure to manage routing operations, including facility maintenance. Vehicular traffic entering and exiting the site will also occur.

Vessel Navigation, Vessel at Anchor, and Vessels at Birth

Potential Lighting Concerns

Navigation lighting, is required by international regulations found in the *International Convention for the Prevention of Collisions at Sea*. These lights are required for the safety of the vessel during passage and for the safety of other vessels in the area. Deck lighting is required for illuminating the deck area when at anchor or berthed to ensure the safety of workers. In addition to showing the appropriate navigation lights, vessels at anchor also switch on deck lights in order to better identify themselves to other marine traffic. The lighting is customized for each vessel. The amounts of light glare will depend greatly on the position of luminaires on the vessel and the degree of their use onboard. Lights could also create conditions that pose a hazard to birds at night, particularly during migratory bird seasons.

Light Management Procedures

a. Require vessels, as part of adherence to the Tanker Acceptance Standards, to minimize light impact from vessels on residential or light sensitive areas.
b. Increase awareness amongst cargo shippers, vessel operators and port agents of the impact of vessel lighting on residential or light sensitive areas through regular interaction and communication.
c. Monitor light use by vessels at berth and when deemed necessary, he Loading Master or terminal staff may request change to the pattern of lights use onboard.
d. Additional light minimization efforts may include:
    i. Encouraging tanker vessel to minimize deck where possible unless required for safety undertaking on board tasks, navigation safety, and/or security of the vessel.
    ii. Wherever possible while at berth or at anchor, encouraging vessel operators to minimize any deck lighting and direct lights away from residential or light sensitive areas.
    iii. Review Environmental Protection Plans related to migratory bird season, and during those times, and make vessel operators aware of the impact of excessive lighting on birds at night.

Terminal and Foreshore Activities

Potential Lighting Concerns

The lighting design for the WMT incorporates several best management practices, guidelines, and standards to avoid environmental impacts (see Section 3.5 and Appendix A). Task lighting will be installed at various points along the jetties and berths, and throughout the foreshore area to provide task lighting to personnel. While the design of most of the terminal and foreshore areas includes full cut-off fixtures to reduce incidence of glare and light trespass, the replacement of these fixtures with poor lighting attributes or the misuse of mobile or adjustable luminaires can lead to obtrusive lighting offsite.

Lighting Management Procedures

a. Replace fixtures that cause sky lighting wherever possible with fixtures using full cut-off design.
b. Turn off lightning where activities are not occurring and where not required for safety of navigation purposes.
c. Use a centralized lighting control system where possible to selectively turn off lights where they are not required.
d. Follow IES guidelines and other industry best practices (see Section 3.5) when replacing or adding terminal or foreshore lighting, and select fixtures that minimize extraneous light pollution through full cut-off design or variable settings designed for the required tasks.

5.0 COMMUNICATION PLANS

5.1 Public Engagement Plan

Trans Mountain has consulted with the VFPA in regards to WMT lighting since 2012. Most recently, Trans Mountain shared an overview of the Light Emissions Management Plan at a stakeholder workshop on November 24, 2016. Trans Mountain has developed a WMT Engagement Plan (Technical Report TR-22) which was filed with the VFPA in February 2017. The Stakeholder Engagement Plan outlines objectives for engagement with stakeholders, guiding principles to achieve successful and meaningful engagement, and a schedule for consultation for various topics including construction, operations, and emergency response (Trans Mountain 2016). Public engagement regarding terminal lighting design for operations and construction will continue to be included in open houses and other topic specific engagement in 2017 through 2019 as the WMT proceeds through construction and into operation.

5.2 Complaint Response Plan

Trans Mountain has a complaint response system in place for the existing WMT I that includes procedures for responding to lighting complaints.

Trans Mountain's goals of the process are to meet regulatory obligations and address stakeholder concerns in a timely and responsive manner. Complaints filed will be acknowledged with the complainant as soon as possible.

Trans Mountain will review and adapt the existing complaint response system for the construction process. In reviewing the process, Trans Mountain has identified the following principles and objectives:

- Provide multiple communication channels to address stakeholder communication needs
- Promote process and communication channels through signage, print, online and social media as well as paid and unpaid media
- 24/7 Email, phone and voicemail access
- Maintain a clear and discrete process for all emergency concerns and complaints
- Provide contractors with process information—and ensuring they meet Trans Mountain standards
- Ensure all inquiries and complaints receive timely responses
- Track and report on all inquiries and complaints
- Emergency contact availability at all times

6.0 SUMMARY

The LEMP has been designed to avoid instances of obtrusive lighting affecting nearby residents and marine users. The LEMP provides a summary of scoping requirements to design lighting at the WMT to the highest standards, and outlines consultations with the VFPA used in the lighting design. The LEMP also includes procedures providing guidance to site personnel regarding how to use light appropriately, and to provide a means of both reporting and remediating instances of poor lighting.

7.0 REFERENCES

Berry, Richard. 1976. Light Pollution in Southern Ontario. The Journal of the Royal Astronomical Society of Canada, Vol.70, No.3.

Canadian Environmental Assessment Agency. 2012. *The Canadian Environmental Assessment Act, 2012* (S.C. 2012, c. 19, s. 52).

CIE (Commission Internationale de L'Eclairage). 2003. Technical Report 150:2003 – Guide on the limitation of the effects of obtrusive light from outdoor lighting installations.

Moffatt and Nichol. 2016. Trans Mountain Expansion Project, Lighting Design Qualities for TMEP Westridge Marine Terminal.

NEB (National Energy Board). May 2016. National Energy Board Report: Trans Mountain Expansion Project

Trans Mountain. 2016. Technical Report TR-23: Westridge Terminal Engagement Plan

APPENDIX A
LIGHT EMISSIONS IMPACT ASSESSMENT

TRANSMOUNTAIN

Trans Mountain Expansion Project

Light Emissions Impact Assessment Report

KMC Document # 01-13283-TW-WT02-STE-RPT-0002 R0

KINDER MORGAN CANADA INC.

Rev No.	Prepared by/ Date	Reviewed by/ Date	Approved by/ Date	TMEP Acceptance/ Date	Pages Revised	Issued Type
0	B. Bylhouwer/ G. Hatcher 2017-01-24	F. Bohlken 2017-01-30	S. Murton/F. Bohlken 2017-01-30			Issued for Information

Light Emissions Impact Assessment

Trans Mountain Expansion Project, Westridge Marine Terminal

Prepared for:
Trans Mountain

Prepared by:
Stantec Consulting Ltd.

File: 123220258

KMC Doc No.:
01-13283-TW-WT02-STE-RPT-0002 R0

January 30, 2017

Table of Contents

1.0 INTRODUCTION 1

2.0 PROJECT DESCRIPTION 1

3.0 TYPES OF OBTRUSIVE LIGHT 4

4.0 REGULATORY BACKGROUND AND ASSESSMENT CRITERIA 8
4.1 VANCOUVER FRASER PORT AUTHORITY LIGHTING GUIDELINES 8
4.2 COMMISSION INTERNATIONAL DE L'ECLAIRAGE 9
4.3 OTHER RELEVANT STANDARDS AND GUIDELINES 10

5.0 EXISTING CONDITIONS 11
5.1 BASELINE MONITORING 11
5.2 BASELINE MONITORING RESULTS 13

6.0 LIGHT IMPACT ASSESSMENT 14
6.1 OVERVIEW OF LIGHTING DESIGN 14
6.2 PREDICTIVE MODELLING APPROACH 15
6.3 PREDICTIVE MODELLING RESULTS AND DISCUSSION 16

7.0 CONCLUSIONS 18

8.0 REFERENCES 18

LIST OF TABLES

Table 1 Reference Outdoor and Indoor Light Levels 5
Table 2 Reference Levels of Sky Glow 7
Table 3 Environmental Zones 9
Table 4 Recommended Maximum Values of Light Trespass (Illumination) per Environmental Zones 9
Table 5 Recommended Maximum Values for Glare (Intensity of Luminaires) in Designated Directions 10
Table 6 Baseline Ambient Light Measurement Locations 13
Table 7 Measured Sky Glow and Light Trespass Readings 14
Table 8 Modelling Predicting Light Emissions from Tanker Traffic Scenarios 16
Table 9 Predicted Levels of Light Trespass and Glare 17

LIST OF FIGURES

Figure 1 Satellite View of Proposed Terminal Footprint and Nearby Anchorages 3
Figure 2 Baseline Light Monitoring Locations and Anchorages 12

LIST OF PHOTOS

Photo 1 Example of Light Trespass 4
Photo 2 Example of Glare 6
Photo 3 Example of Sky Glow 7

LIST OF APPENDICES

APPENDIX A PANORAMIC PHOTOGRAPHS CAPTURED AT BASELINE AMBIENT LIGHT MEASUREMENT LOCATIONS A.1

APPENDIX B LUMINARIES REFERENCE INFORMATION B.1

1.0 INTRODUCTION

Stantec Consulting Ltd. (Stantec) has been retained by Trans Mountain to conduct a Light Emission Impact Assessment for the Westridge Marine Terminal (WMT) in Burnaby, British Columbia, part of the Trans Mountain Expansion Project.

The Light Emission Impact Assessment (LEIA) has been completed to fulfill a requirement of the Vancouver Fraser Port Authority (VFPA) Permit Application for the proposed WMT. The VFPA permit requirements for the WMT include:

- Assessment of the potential impacts of light pollution from the proposed facility (the LEIA)
- Description of the effects of terminal or berth lighting on the visibility or effectiveness of any aids to navigation and/or the safe navigation of vessels in the proximity of the terminal
- Analysis of whether the facility has sufficient navigation aids for approaches, including an assessment of whether the dock is adequately lit

The latter two requirements listed above have been prepared by Trans Mountain's engineering team and are not further discussed in this document. This report focuses on the LEIA.

The LEIA provides an overview of the existing conditions in the project area and predicts the effects of proposed WMT lighting on nearby sensitive receptors. Potential effects to navigation have been evaluated under a separate cover.

This report is presented in eight sections. The purpose of the Light Emission Impact Assessment is provided in Section 1.0 and an overview of the proposed Project is provided in Section 2.0. A description of the types of obtrusive light is provided in Section 3.0. The regulatory criteria used in the assessment are discussed in Section 4.0 and an overview of the existing ambient light environment in the Project area is provided in Section 5.0. Section 6.0 contains the methodology, results and a discussion of the LEIA, and concluding remarks are provided in Section 7.0. References cited are listed in Section 8.0.

2.0 PROJECT DESCRIPTION

Trans Mountain is currently proposing to construct a twinning of the existing Trans Mountain Pipeline system from Edmonton, Alberta to the WMT in Burnaby, British Columbia. The existing Trans Mountain Pipeline system was established approximately 60 years ago and has a current capacity of roughly 47,690 m^3/d. The system transports a variety of crude oil and petroleum products from western Canada to locations in central and southwestern British Columbia, Washington and offshore.

The proposed Trans Mountain Expansion Pipeline will largely parallel the existing Trans Mountain Pipeline system right-of-way, and expand the existing throughput to 141,500 m^3/d. The physical components of the Project include: the installation of new pipeline segments and reactivation of existing lines that are currently maintained in a deactivated state; construction of pump stations; expansion of existing terminals through the addition of new tanks and other infrastructure and the construction of a new dock complex at the WMT; and the addition of new power lines under the jurisdiction of the appropriate provincial authorities.

The scope of the Project specifically involves the following applied-for facilities:

- Using the existing active 610 mm (NPS 24) and 762 mm (NPS 30) O.D. buried pipeline segments
- Constructing three new 914 mm (NPS 36) O.D. buried pipeline segments totaling approximately 863.5 km:
  - Edmonton to Hinton—338.6 km
  - Blue River to Darfield—153.4 km
  - Black Pines to Burnaby—371.5 km
- Constructing one new 1,067 mm (NPS 42) O.D. buried pipeline segment:
  - Hargreaves to Blue River—121.4 km
- Reactivating two 610 mm (NPS 24) O.D. buried pipeline segments that have been maintained in a deactivated state:
  - Hinton to Hargreaves—151.1 km
  - Darfield to Black Pines—41.6 km
- Constructing two, 3.4 km long 762 mm (NPS 30) O.D. buried delivery lines from the Burnaby storage Terminal to the WMT (the Westridge Delivery lines)
- Installing 25 new sending or receiving traps (18 on the Edmonton-Burnaby mainlines), for in-line inspection tools at nine existing sites and two new sites
- Adding 12 new pump stations (10 at the existing Trans Mountain Pipeline [TMPL] site and two at a new greenfield site)
- Constructing new tanks located at the terminals near Edmonton, Sumas and Burnaby
- Constructing one new dock complex, with a total of three Aframax-capable berths, as well as a utility dock (for tugs, boom deployment vessels and emergency response vessels and equipment) at the WMT, followed by the decommissioning of the existing berth, which was assessed in Trans Mountain's ESA

The existing WMT is located along Burrard Inlet, 5.3 km east of the Second Narrows Bridge. The purpose of the WMT is to be a loading and offloading facility for crude and jet fuels. The proposed expansion of the WMT includes upgrading dock facilities to three berths, each capable of loading Aframax class vessels, and a small utility dock for tugs, pilot boats, spill response vessels and equipment, and boom boats.

A satellite image showing the location and prominent features of the proposed WMT and nearby anchorages associated with the WMT are shown in Figure 1.

\\Cd1213-f01\work_group\1214\active\1XXX - Other PCs\1232xxxxx\123220258 Westridge Lighting Assessment\geomatics\mapping\mxd\report\123220258-001 Project Location.mxd cshupe

Sources: ESRI
Service Layer Credits: © 2017 DigitalGlobe Image courtesy of USGS © 2017 GeoEye © Province of British Columbia Earthstar Geographics SIO © 2017 Microsoft Corporation © 2017 HERE © AND
Sources: Esri, HERE, DeLorme, Intermap, increment P Corp., GEBCO, USGS, FAO, NPS, NRCAN, GeoBase, IGN, Kadaster NL, Ordnance Survey, Esri Japan, METI, Esri China (Hong Kong), swisstopo, MapmyIndia, © OpenStreetMap

Disclaimer: This map is for illustrative purposes to support this Stantec project; questions can be directed to the issuing agency.

Satellite View of Proposed Terminal Footprint and Nearby Anchorages

Stantec

3.0 TYPES OF OBTRUSIVE LIGHT

Light associated with an industrial development is critical to the safe and efficient operation of the enterprise. Excessive or poorly designed lighting can have detrimental effects on the environment whereas careful and progressive design can achieve the operational requirements while minimizing the residual impact to human and environmental receptors. Good lighting meets the required levels for the property or facility, with low capital, maintenance, and energy costs.

Badly designed lighting or excessive lighting can result in three types of obtrusive lighting: light trespass, glare, and sky glow, described below.

Light Trespass: The transmission of light from fixtures within a facility to the environment and sensitive receptors outside the facility (see Photo 1). Incident light mainly becomes problematic when lights located on the outside of a facility shine in through the windows of nearby residential homes at levels that can potentially disrupt sleep, or distract from normal levels of lighting.

Photo 1 Example of Light Trespass

The unit of measure for light incidence, within or outside a facility, is a lux. A lux is equal to 1 lumen per square metre (lumen/m^2), and is a measure of how much luminous flux is spread over a given area. Reference light levels for some common outdoor and indoor conditions/activities are provided in Table 1.

Table 1 Reference Outdoor and Indoor Light Levels

Condition/Activity	Light Level (Lux)
Outdoor Condition	
Full Daylight	10752
Overcast Day	1075
Very Dark Day	107
Twilight	10.8
Full Moon	0.108
Starlight	0.0011
Overcast Night	0.0001
Indoor Lighting Levels	
Public Areas with Dark Surroundings	20–50
Warehouses, Homes	150
Normal Office Work	500
Supermarkets	750
Detailed Mechanical Workshops	1000
Performance of Very Special Visual Tasks	10,000–20,000
SOURCE: (Engineering Toolbox 2017)	

Glare: Potential environment effect in which intense, harsh, or contrasting lighting conditions can reduce the ability to see (see Photo 2). A common example of glare is the oncoming high-beam headlights that provide ample light to the high beam user, but can momentarily disable drivers of oncoming traffic.

Photo 2 Example of Glare

The unit of measure for brightness is luminous intensity, measured in candela (cd). Luminous intensity is defined as the wavelength weighted power emitted by a light source in a particular direction per unit solid angle. Higher candela values correspond to brighter lighting, and typically light fixtures emit more light in certain directions than others. Situations where bright lights are pointed in the direction of a receptor—such as high beam lights from incoming traffic—lead to instances of high glare.

Sky Glow: Illumination of the sky or clouds by light sources on the surface of the earth such as street lighting, and haze in the atmosphere that replaces the natural night time sky with a translucent to opaque lighting dome. Sky glow is the cumulative effect of lights either emitting upward, or being reflected upward by the surface plus the emission from photochemical activity in the atmosphere (see Photo 3).

Photo 3 Example of Sky Glow

The unit of measure for the brightness of the sky, including sky glow, is magnitudes per square arcsecond (mag/arcsec^2). Reference levels for sky glow are shown in Table 2. The higher the number, the more the natural background dominates the sky, and the lower the number, the greater the degree of sky glow caused by the reflection of lighting from the atmosphere.

Table 2 Reference Levels of Sky Glow

Sky Glow (mag/arcsec^2)	Corresponding Appearance of the Sky
21.7 (Rural)	The sky is covered with stars that appear large and close. In the absence of haze the Milky Way can be seen to the horizon. The clouds appear as black silhouettes against the sky.
21.6	The above with a glow in the direction of one or more cities is seen on the horizon. Clouds are bright near the city glow.
21.1	The Milky Way is brilliant overhead but cannot be seen near the horizon. Clouds have a greyish glow at the zenith and appear bright in the direction of one or more prominent city glows.
20.4	The contrast to the Milky Way is reduced and detail is lost. Clouds are bright against the zenith sky. Stars no longer appear large and near.
19.5	Milky Way is marginally visible, only near the zenith. Sky is bright and discoloured near the horizon in the direction of cities. The sky looks dull grey.
(18.5 Urban)	Stars are weak and washed out and reduced to a few hundred. The sky is bright and discoloured everywhere.
SOURCE: Berry 1976	

In addition to the three main categories of obtrusive lighting described above, light flicker and light presence can also result in disruptive environmental effects. Light flicker refers to the periodic flickering of light sources (Scottish Executive 2007). The rate of flicker and the duration of exposure can cause over-stimulation of electrical activity to the human brain (Scottish Executive 2007). Light presence refers to where light emitted from a light source can be viewed from outside the area it was provided for (Scottish Executive 2007). In general, light presence causes minimal visual discomfort.

4.0 REGULATORY BACKGROUND AND ASSESSMENT CRITERIA

Most lighting guidelines and regulations have been directed toward the provision of suitable lighting for the safe and efficient activities of humans. For example, street lighting, indoor lighting and lighting around industrial plants are all subject to various guidelines to facilitate a safe work environment. Currently, there are no legally binding requirements (e.g., regulations) in British Columbia to regulate obtrusive light being emitted from facilities. The Vancouver Fraser Port Authority (VFPA) have published Guidelines—Lighting (PMV 2015), which inform and guide the design, installation, and operation of lighting proposed by projects undergoing its Project and Environmental Review process. An overview of these requirements is provided below in Section 4.1.

As part of the design process, Trans Mountain has incorporated additional best practices into their lighting design including guidelines from the International Dark Sky Association (IDA) and the Commission Internationale de L'Éclairage (CIE), also known as the International Commission on Illumination. These organizations have developed guidelines and recommendations to limit light pollution and associated impacts to humans and wildlife. Many lighting design elements for the Project adhere to these guidelines through design standards developed by the Illuminating Engineering Society (IES), who have adopted IDA and CIE guidelines and recommendations for use in developing new outdoor lighting guidance and standards. Each of these organizations and their guidelines are further described in Sections 4.2, 4.3 and 4.4.

4.1 VANCOUVER FRASER PORT AUTHORITY LIGHTING GUIDELINES

The VFPA Guidelines—Lighting (VFPA 2015) are intended to assist applicants of projects on lands and waters managed by VFPA when designing outdoor lighting requirements and/or developing outdoor Lighting Plans. Lighting Plans should be designed to minimize glare and light trespass, promote energy conservation and to maintain dark skies while ensuring safety and security. VFPA determines the requirement for a lighting Plan in the preliminary review phase of the Project and Environmental Review process.

The VFPA guidelines apply to all proposed developments on port property that would require a project permit, including construction and operation phases. The guidelines highlight best practices, and describe VFPA required lighting standards, including conformance to the International Safety Guide for Oil Tankers and Terminals and other international standards where applicable (refer to Section 5.1 of the Guideline). VFPA recommends that its guidelines should be considered in conjunction with the Illuminating Engineering Society (IES) Lighting Design Handbook and other applicable guidelines and regulations such as the Canada Occupational Health and Safety Regulations and the National Building Code of Canada (PMV 2015).

4.2 COMMISSION INTERNATIONAL DE L'ECLAIRAGE

The CIE is an independent non-profit organization serving member countries on a voluntary basis. Since its inception in 1913, CIE has become a professional organization and is currently recognized by the International Organization for Standardization (ISO) as an international standardization body relating to matters on light and lighting, color and vision, photobiology, and image technology (CIE 2017).

CIE has established guidelines for light trespass and glare for various levels of urbanization. The values represented in the guidelines are based on environmental zones and time of day. Four environmental zones have been established by the CIE as a basis for outdoor lighting (CIE 2003). The four zones are listed in Table 3.

Table 3 Environmental Zones

Zone	Surrounding	Lighting Environment
E1	Natural	Intrinsically dark
E2	Rural	Low distinct brightness
E3	Suburban	Medium distinct brightness
E4	Urban	High distinct brightness
SOURCE: CIE 2003		

The maximum values recommended by CIE for light trespass (illuminance) on properties by environmental zone and time of day are presented in Table 4.

Table 4 Recommended Maximum Values of Light Trespass (Illumination) per Environmental Zones

Time of Day	Environmental Zones			
	E1 Natural	E2 Rural	E3 Suburban	E4 Urban
19:00–23:00	2 lux	5 lux	10 lux	25 lux
23:00–6:00	0 lux	1 lux	2 lux	5 lux
SOURCE: CIE 2003				

The maximum values recommended by CIE for glare (intensity of luminaires) in designated directions by environmental zone and time of day are presented in Table 5.

Table 5 Recommended Maximum Values for Glare (Intensity of Luminaires) in Designated Directions

Time of Day	Environmental Zones			
	E1 Natural	**E2 Rural**	**E3 Suburban**	**E4 Urban**
19:00–23:00	2,500 cd	7,500 cd	10,000 cd	25,000 cd
23:00–6:00	0[1] cd	500 cd	1,000 cd	2,500 cd
NOTE: [1] If for public lighting value may be up to 500 cd				
SOURCE: CIE 2003				

The CIE maximum values for light trespass and glare have been used in this assessment to identify potential effects on nearly receptors (refer to Section 6.3).

4.3 OTHER RELEVANT STANDARDS AND GUIDELINES

There are several other organizations whose mandate is aimed at providing awareness of the potential effects from light pollution and providing means to reduce light pollution including:

- Illumination Engineering Society (IES)
- American Petroleum Institute (API)
- International Dark Sky Association (IDA)

The IES "seeks to improve the lighted environment by bringing together those with lighting knowledge and by translating that knowledge into actions that benefit the public" (IES 2017). The IES—North America chapter, has adopted the use of the environmental zones originally proposed by the CIE (Section 4.2), and recommends their implementation in designing new outdoor lighting.

The Lighting Handbook (IES 2011) guides and gives recommendations for designing, installing, and maintain lighting systems. The tenth edition (2011) of the handbook provides information and recommendations for guiding designers and users of light systems with a focus on both reducing lighting energy expectations and the need for productive luminous environments. This handbook is recognized internationally as a best practices resource (see Section 6.1 for an overview of the IES standards incorporated into the lighting design for the WMT).

The API is a national trade association representing America's oil and natural gas industry. Currently, API maintains more than 600 standards and recommended practices, including environmental protection, safe operating practices, and sound engineering. Several of API's standards have been incorporated into state and federal regulations, and increasingly are being adopted by the ISO.

API has developed guidelines for the design of marine-based facilities. The guidelines are intended to establish a general approach to the practice and principles of good light installation and maintenance; basic design criteria and recommended illuminances for facility areas; and a basis for estimating lighting power requirements (API 2008).

The IDA is closely associated with astronomical interests, and publishes a number of model municipal guidelines, fact sheets, and other material for public education on the benefits of reducing light pollution.

5.0 EXISTING CONDITIONS

5.1 BASELINE MONITORING

Baseline monitoring was completed May 16-20, 2016 at receptor locations either adjacent to or with unobstructed views of the WMT. The receptor locations are representative of neighborhoods that could be affected by Project associated lighting. These are:

- Location #1—Representative of Westridge neighborhood, Burnaby, BC
- Location #2—Representative of Capital Hill neighborhood, Burnaby, BC
- Location #3—Representative of Dollarton neighborhood, North Vancouver, BC
- Location #4—Representative of Belcarra, BC

Figure 2 shows the four monitoring locations relative to WMT. Panoramic photographs taken from the four locations are included in Appendix A. Information on the four monitoring locations is provided in Table 6.

\\Cd1213-f01\work_group\1214\active\1XXX - Other PCs\1232xxxxx\123220258 Westridge Lighting Assessment\geomatics\mapping\mxd\report\123220258-002 Baseline Light Monitor.mxd cshupe

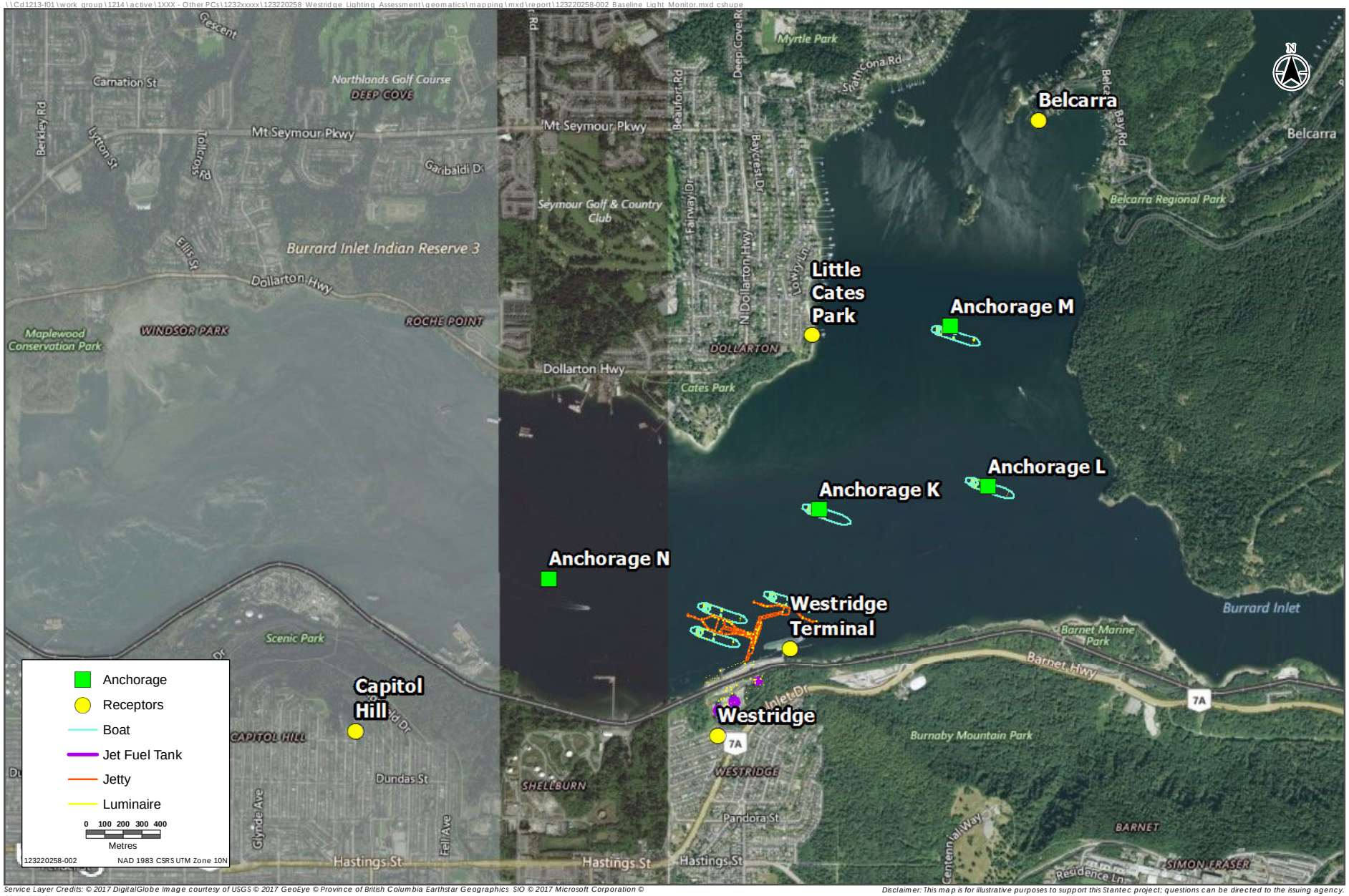

Service Layer Credits: © 2017 DigitalGlobe Image courtesy of USGS © 2017 GeoEye © Province of British Columbia Earthstar Geographics SIO © 2017 Microsoft Corporation © 2017 HERE © AND
Sources: Esri, HERE, DeLorme, Intermap, increment P Corp., GEBCO, USGS, FAO, NPS, NRCAN, GeoBase, IGN, Kadaster NL, Ordnance Survey, Esri Japan, METI, Esri China (Hong Kong), swisstopo, MapmyIndia, © OpenStreetMap contributors, and the GIS User Community

Disclaimer: This map is for illustrative purposes to support this Stantec project; questions can be directed to the issuing agency.

Baseline Light Monitoring Locations and Anchorages

Stantec

Table 6 Baseline Ambient Light Measurement Locations

Location No.	Site Location (UTM Zone 10U)		Site Description	Comments
	Easting (m)	Northing (m)		
1	503,234	5,459,513	West of Existing Terminal	Loading dock and ship in anchorage was visible from this location.
2	501,306	5,459,336	251 North Ellesmere Avenue, Burnaby	Existing Terminal, tanks, loading area and anchored ship visible from this location.
3	503,755	5,461,387	Little Cates Park, North Vancouver	Closest residence to anchorage locations
4	505,302	5,462,215	Belcarra	Smaller community with potentially lower ambient light levels near Anchorage M

Baseline monitoring at each site included measurements of illuminance (lux) and sky glow. Illuminance was measured using a conventional, integrating hemispherical light meter (Extech EA33) with a resolution of 0.01 lux. Sky glow was measured using a Unihedron Sky Quality Meter with lens (SQM-L). This meter was developed for astronomical applications to document the level of sky brightness, measured in magnitudes/square arc-second (mag/arcsec^2). In addition to the light measurements, panoramic photographs were taken at each location to document the view during the day and during the night using a high quality (Canon 60D) digital camera.

Baseline light measurements were collected May 16–20, 2016 when ground reflections were minimal as snow cover was absent. Given these conditions, the measurements are considered a conservative assessment. Photographs of nearby sensitive receptor locations were also taken during May 16–20, 2016. Land cover in the region is unlikely to change substantially across seasons due to the infrequency of snow cover. Monitoring locations were also chosen without obstruction to the site either by topography or vegetation. Baseline monitoring was therefore considered to be representative of all seasons.

5.2 BASELINE MONITORING RESULTS

Results of the ambient light monitoring event for each baseline light monitoring location are shown in Table 7. Measurements of incident light were below 1 Lux at each monitoring location.

Table 7 Measured Sky Glow and Light Trespass Readings

Site	Average Sky Brightness (mag/arcsec 2)	Light Trespass 1 (Lux)	CIE Environmental Zone	Date
1	17.5	< 0.01	E3	May 16-19, 2016
2	17.6	< 0.01	E3	May 16-19, 2016
3	17.5	< 0.01	E3	May 16-19, 2016
4	17.7	< 0.01	E3	May 16-19, 2016
NOTES: [1] Lux levels were below instrument detection limit				

Based on the ambient light levels (both sky glow and light trespass), the location of the Project and receptor locations are considered to be a suburban environmental zone, category E3 (see Table 3), with light trespass measurements consistently below 1 Lux, well within the CIE guidelines for light trespass in suburban/urban areas (see Table 4). However, sky glow measurements are consistent within an urban environment due to combined light emissions from nearby urban areas (see Table 2).

6.0 LIGHT IMPACT ASSESSMENT

6.1 OVERVIEW OF LIGHTING DESIGN

The lighting design for the WMT, was completed by Trans Mountain and used as the basis for the LEIA (Moffat and Nichol 2016). The light design was based on the Front End Engineering and Design (FEED) study for the Project (current as June 2016) and includes the WMT, including docking and foreshore areas, and the tanker vessels. The lighting design was developed in accordance with the following standards and guidelines:

- VFPA Project and Environmental Review, Guidelines—Lighting (2015)
- IES RP-33-14, Lighting for Exterior Environments
- IES TM-10-1000, Addressing Obtrusive Light
- IES HB-10-11, The IES Lighting Handbook
- IES F-1-03, Guideline for Security Lighting for People, Property, and Public Spaces
- IES RP-8-14, Roadway Lighting

These standards provided the design with guidance to avoid excessive lighting for outdoor applications, reduce or eliminate contributions to sky glow in the design, reduce light trespass for nearby receptors, but to also provide lighting that is safe and functional for the required tasks at the WMT. The IES design guidelines are based on guidelines established by the CIE to avoid obtrusive lighting, and adhere to guidelines established by the IDA.

The outdoor lighting design is based on the use of flood-lights with LED type lighting due to the number of benefits such lighting provides over historical type industrial lighting, including:

- Low glare and sharp cut-off photometrics
- Low energy consumption
- Low maintenance
- Long life expectancy
- Ecologically friendly
- Durability in extremely cold or hot temperatures
- Operational in extremely cold or hot temperatures
- Instant lighting and frequent switching
- High colour rendition index (CRI) quality of light for improved visibility by human eyes within the illuminated areas plus improved performance of CCTV systems
- Highly versatile and adaptable to controls schemes including dimming, individually addressable fixtures, group addressable fixtures, scene control and colour tuning (Moffatt and Nichol 2016)

Cut sheets for the luminaires used for the lighting plan are included in Appendix B. The choice of lighting for the WMT and foreshore was based on availability, well proven LED lighting technology, high optical performance, sharp cut-off features, high reliability, and modularity of components (Moffatt and Nichol 2016). For tanker vessels, their lighting design was based on a generic tanker design that included features required navigation and safety (Moffat and Nichol 2016).

6.2 PREDICTIVE MODELLING APPROACH

Lighting plan information provided by Trans Mountain was reviewed to assess light trespass impacts on receptor locations. Trespass was predicted using the AGi32 photometric analysis software. AGi32 is an industry standard commercial software package used for industrial lighting design. Features of AGi32 include:

- Creating 3D models of project site layouts to scale that incorporate distribution optics, mounting height, tilt, rotation, electrical power, and reflections
- Utilizing international standard photometry data for luminaires
- Providing realistic textures and colours for objects and buildings created in the 3D model
- Inserting calculation areas and points, via 3D objects, into the model to represent receptor locations

An AGi32 model including the foreshore areas was provided to Stantec to conduct a light emissions impact assessment. The AGi32 file was updated by Stantec based on the lighting plan provided by Trans Mountain to include proposed lighting for the jetties, storage tanks, and tanker vessels to identify the potential impacts of the proposed outdoor lighting on adjacent residential areas. Lighting information for the jetties, storage tanks, and tanker vessels was sourced from the vender based on the fixture schedule in the light design report.

Table 8 outlines the tanker traffic scenarios modelled for the purposes of this assessment. Based on possible vessel traffic pattern at WMT and including the effect of tankers at anchor, Scenario 3 (winter scenario with three tankers at berth and three at anchor) is expected to lead to maximum exposure from light emissions and is therefore considered the worst case. As a further conservative measure, it was assumed that anchorages K, L, and M would be used during this scenario. That anchorage combination will have the highest potential for light impact due to the proximity of tankers to receptor locations (see Figure 2). For the remaining scenarios, it was assumed that anchorages closest to the receptors of interest were used. For example, the illuminance prediction at receptor location 3 for Scenario 1 was based on tanker vessels at anchorages M and K.

Table 8 Modelling Predicting Light Emissions from Tanker Traffic Scenarios

Scenario	Number of Tankers at Berth	Number of Tankers at Anchorage
1. Maximum tanker activity in winter	3	3
2. Average (mode) tanker activity in winter	3	1
3. Maximum tanker activity in summer	3	2
4. Average (mode) tanker activity in summer	2	0

The results of the light modelling for light trespass were compared against the baseline measurements (see Section 5.0) and analyzed to determine compliance against the CIE guidelines for incident light. See Section 4.2 for the CIE guideline framework.

Glare was estimated based on the relative positions of the receptors and luminaires at the WMT and the luminous intensity of each luminaire, as outlined in the CIE guidelines for glare (CIE 2003). Many of the luminaires for the WMT are full cut-off fixtures that have a very low luminous intensity in the direction of the receptors. Therefore, only fixtures that are not full cut-off with a high power rating were included in the glare prediction analysis. Luminous intensity estimates were compared to the CIE guidelines for this assessment.

An assessment of the effects of sky glow resulting from the operation of the Project on nearby residential areas was conducted qualitatively.

6.3 PREDICTIVE MODELLING RESULTS AND DISCUSSION

The predicted levels of light trespass and glare resulting from each tanker vessel scenario are presented in Table 9. Note that while there are slight differences in predicted light trespass between seasonal scenarios, the maximum glare predictions are the same.

Table 9 Predicted Levels of Light Trespass and Glare

Receptor Location	Light Trespass (Lux) by Tanker Vessel Scenario					Max Glare (cd)	
	Maximum Winter	Average Winter	Maximum Summer	Average Summer	CIE Guideline Threshold	All Scenarios	CIE Guideline Threshold
1	0.71	0.64	0.64	0.56	2	0	1,000
2	0.12	0.12	0.1	0.07	2	667	1,000
3	0.28	0.24	0.22	0.06	2	667	1,000
4	0.12	0.11	0.08	0.03	2	906	1,000

Predicted illuminance (light trespass levels) for the worst case scenario (i.e., maximum vessels during winter) are expected to be well below CIE guidelines for the suburban environment (i.e., environmental zone E3) at each receptor during the twilight and nighttime periods. The design explicitly incorporated CIE criteria to limit illuminance off-site and reduce incidence of light trespass. Because the other three scenarios involve fewer tankers at berth or anchor, predicted illuminance levels are slightly lower than the worst case scenario (Table 9). The decrease in illuminance is small, due to the distance between the receptors and the WMT and vessels. Receptors at Capitol Hill, Dollarton, and Belcarra are 500 m or more from the nearest tanker vessel, and even farther from the WMT complex. Receptors in Westridge are closer to the WMT but are much farther away from the tanker vessels, and would therefore also see very little change in illuminance between scenarios.

Estimates for glare are also expected to be below CIE guideline levels for a suburban environmental zone (E3) at each receptor location during the twilight and nighttime periods for each operational scenario. Lighting along the jetties and most of the foreshore will use full cut-off lighting, reducing the viewing angle towards sensitive receptors that contribute to glare. Luminaires installed on the tanks have relatively higher glare than other luminaires at WMT towards receptor locations at Capitol Hill, Dollarton, and Belcarra due to the orientation and design of the fixtures used. Zero glare is predicted at the Westridge receptor location due to obstruction from vegetation and terrain near the WMT.

The glare from deck lighting on tanker vessels is predicted to exceed the CIE guidelines intermittently for all operational scenarios, depending on their orientation while at anchor and duration at port for loading. Deck lighting is a requirement of ships at anchor per the International Maritime Organization *Convention on the International Regulations for Preventing Collisions at Sea, 1972*, and is also used for security purposes. Glare estimates for the vessels assume a generic Aframax design, and could be as high as 10-20,000 cd depending on orientation of the vessels and orientation, and tilt of lighting ship lighting fixtures. To reduce wherever possible adverse lighting towards nearby receptors, Trans Mountain will communicate

with vessel operators to extinguish all but the most necessary lighting to reduce glare wherever possible. Trans Mountain will also request that docked vessels similarly extinguish all lighting except what is required by regulation during loading operations.

Most the light design for the Project incorporates the use of full cut-off LED luminaires and was developed in accordance with the guidelines and recommendations of the IDA and CIE. Therefore, the Project is expected to have a negligible contribution to the existing sky glow for all tanker vessel scenarios.

7.0 CONCLUSIONS

This assessment shows that for the worse case operating scenario (i.e. worse case tanker activity in winter, when tanker vessels would be docked at each berth and anchorage) the light emissions from the WMT itself will be within the CIE guidelines, and reflects the level of care taken into the design of the lighting for the WMT and foreshore areas to avoid environmental impacts. Ships at anchor will have safety/security lighting that may exceed glare criteria depending on the tides and the exact design of vessel lighting. However, these exceedances are due to prevailing international regulations. Trans Mountain is committed to cooperating with vessel operators to extinguish exterior deck lighting wherever possible.

8.0 REFERENCES

API (American Petroleum Institute). 2008. API RP 14F: Recommended Practice for Design and Installation of Electrical Systems for Offshore Production Platforms.

Ausenco. 2015. Trans Mountain Expansion Project Simulation Study

Berry, R. 1976. Light Pollution in Southern Ontario. *The Journal of the Royal Astronomical Society of Canada*, Vol. 70, No.3.

CIE (Commission Internationale de L'Éclairage). 2003. Technical Report 150:2003 – Guide on the limitation of the effects of obtrusive light from outdoor lighting installations.

CIE. 2017. Advancing Knowledge and Providing Standardization to Improve the Lighted Environment. Retrieved from http://www.cie.co.at/index.php/LEFTMENUE/About+us

Engineering Toolbox. 2017. Luminance – Recommended Light Levels. Retrieved from http://www.engineeringtoolbox.com/light-level-rooms-d_708.html

IES (Illuminating Engineering Society). 2017. Retrieved from http://www.ies.org/about/what_is_iesna.cfm

Moffatt and Nichol. 2016. Trans Mountain Expansion Project, Lighting Design Qualities for TMEP Westridge Marine Terminal.

PMV (Port Metro Vancouver). 2015. Project and Environmental Review, Guidelines – Lighting.

Scottish Executive. 2007. Guidance Note – Controlling Light Pollution and Reducing Lighting Energy Consumption. 38 pp.

APPENDIX A
PANORAMIC PHOTOGRAPHS CAPTURED AT BASELINE AMBIENT LIGHT MEASUREMENT LOCATIONS

Appendix A Panoramic Photographs Captured at Baseline Ambient Light Measurement Locations

Photo A-1 Daytime Panoramic View from Receptor Site 1 (West of Existing Terminal)

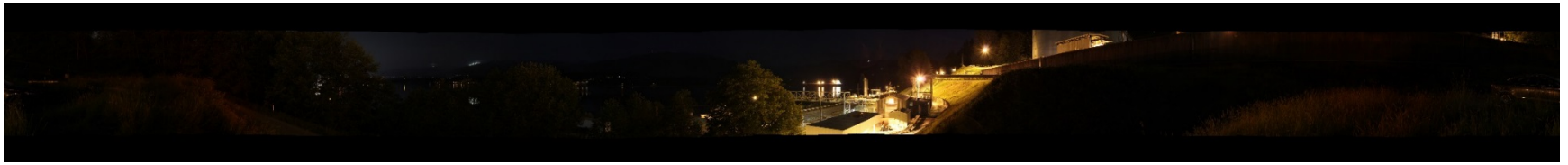

Photo A-2 Nighttime Panoramic View from Receptor Site 1 (West of Existing Terminal)

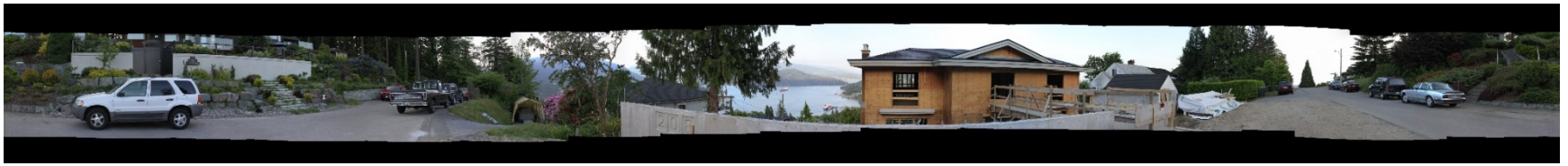

Photo A-3 Daytime Panoramic View from Receptor Site 2 (251 North Ellesmere Avenue)

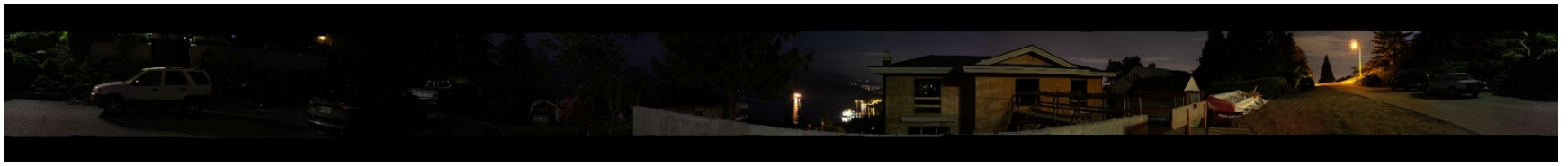

Photo A-4 Nighttime Panoramic View from Receptor Site 2 (251 North Ellesmere Avenue)

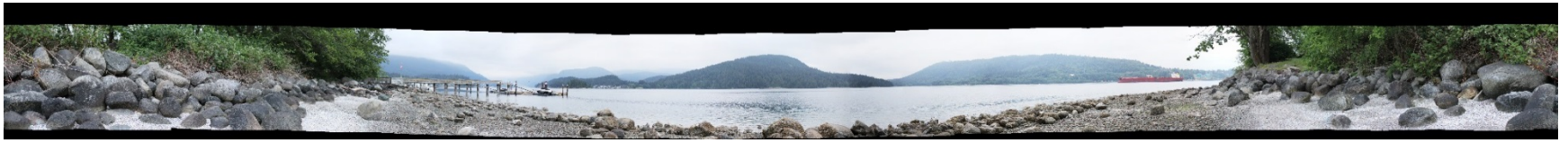

Photo A-5 Daytime Panoramic View from Receptor Site 3 (Little Cates Park)

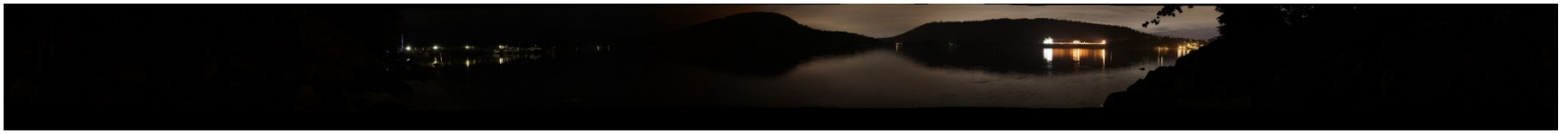

Photo A-6 Nighttime Panoramic View from Receptor Site 3 (Little Cates Park)

Photo A-7 Daytime Panoramic View from Receptor Site 4 (Belcarra)

Photo A-8 Nighttime Panoramic View from Receptor Site4 (Belcarra)

APPENDIX B
LUMINARIES REFERENCE INFORMATION

Champ® FMV nR Floodlights

Cl. I, Div. 2, Groups A, B, C, D
Cl. I, Zone 2, AEx nR II
Cl. II, Div. 1, Groups F, G
(up to 250W)

Marine locations
NEMA Type 4X and IP66
Wet locations

The Champ FMV nR Series Floodlight offers exceptional illumination in industrial areas, both indoors and out. And, it comes standard as a restricted breathing luminaire. The Champ FMV nR Series Floodlight is easily adjusted to aim light where it's needed and is available in a wide variety of energy-saving mogul base HID light sources and wattages including:

- 150–400W High Pressure Sodium
- 175–400W Metal Halide

Applications:

The FMV is made with heavy-duty, die-cast aluminum components and stainless steel hardware. It offers superior corrosion resistance to ensure longer life, which makes the FMV floodlight the ideal choice for a wide variety of industrial applications, including wet and marine environments.

Features and Benefits:

- AEx nR, Ex nR restricted breathing rating is standard—a hazardous location luminaire without additional accessories or options; restricted breathing offers cooler T-numbers for increased hazardous locations suitability
- NEMA 7x6 butterfly beam floodlight pattern—wide, uniform and far reaching to provide excellent efficiency and more light where you need it
- NEMA Type 4X and IP66 construction is designed for use indoors and outdoors in marine and wet locations—with stainless steel external hardware suitable for saltwater and corrosive applications
- Easy wiring—standard terminal block with marked terminals saves time and eliminates wiring errors
- Vapor-tight sealing cable connector—standard
- Will accommodate existing mounting hardware—SFA6 slipfitter for pole and SWB6 wall mount
- Optional metric machining will accept M20 or M25 (must be specified on order)
- 40°C, 55°C and 65°C ambient suitability—addresses high ambients common at industrial facilities
- Low ambient capability to -40°C—perfect for colder climates
- Heavy-duty, die-cast copper-free aluminum enclosure with epoxy coating and stainless steel hardware—provides a robust design with industrial grade construction and corrosion resistance
- Hinged door frame assembly—has captive cover screws for ease of relamping
- Yoke mount design—standard construction provides the greatest mounting flexibility, can be mounted vertically (wall), horizontally (rooftop or floor), or any angle in between
- 3-axis resonance withstand and UL844 vibration compliant—can stand up to the tough jobs
- Precision formed aluminum reflector—superior beam control, distribution and efficiency
- Multi-tap ballasts—offering a choice of 120, 208, 240 and 277V; 220V 50Hz, 240V 50Hz, Tri-Tap (120, 277 and 347), and 480V ballasts are also available
- High light output with a low cost of operation—cost-effectiveness in a high wattage floodlight
- For use with SFA6 Slipfitter Adapter and SWB6 Wall Mount Bracket accessories—further enhances mounting flexibility

Certifications & Compliances:

NEC/CEC (NEC Ballast Gear and Socket):

- Class I, Division 2, Groups A, B, C, D
- Class I, Zone 2, AEx nR II
- Class II, Division 1, Groups F, G (up to 250W)
- Marine locations
- NEMA Type 4X and IP66
- Wet locations

IEC (IEC Ballast Gear and Socket):

- IEC Zone 2, Ex nR II (pending)

UL/cUL Standards:

- 844—Hazardous (Divisions Classified) Locations
- 60079-15
- 1598—Luminaires
- 1598A—Supplemental Requirements for Luminaires for Installation on Marine Vessels

IEC Standards:

- 60079-15

Standard Materials:

- Fixture housing and door frame assembly—die-cast aluminum
- External hardware—stainless steel
- Lens—heat- and impact-resistant tempered glass
- Yoke—aluminum

Standard Finishes:

- Enclosure and yoke—Corro-Free™ epoxy powder coat
- Stainless steel—natural

The only full frame trunnion mount floodlight with a T3 rating and a removable ballast tray assembly.

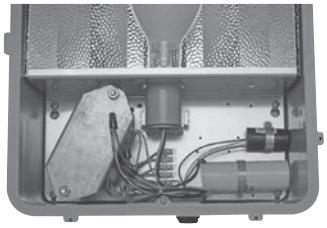

Industry Best for Ease of Installation:

1. Removable ballast tray
2. Prewired to terminal blocks
3. Substantial room for wiring

Ratings (Electrical/Size):

Sources/Wattages (Mogul Base Lamps)

- HPS—150, 250, and 400W
- MH—175, 250, and 400W

Voltages

Standard Voltage Ballasts

- Multi-tap (120, 208, 240, and 277V 60Hz)
- Dual-tap (120 and 277V)
- 480V 60Hz
- Tri-tap (120, 277, 347V 60Hz)

Optional Voltage Ballasts

- 220V or 240V 50Hz (for export)
- 220V 60Hz (for export)

Isolated Ballasts

- 208, 240, or 480V (for Canada)

Hub Size

- Standard—3/4" NPT
- Optional—25 mm (M25 x 1.5) or 20 mm (M20 x 1.5)

On behalf of jerickson

Copyright© 2013 Eaton's Crouse-Hinds Business

Champ® FMV nR Floodlights

Cl. I, Div. 2, Groups A, B, C, D
Cl. I, Zone 2, AEx nR II

Marine locations
NEMA Type 4X and IP66
Wet locations

Ordering Information for Floodlight with NEC Ballast:

Lamp Type	Watts	Yoke Mount 3/4" NPT Hub
High Pressure Sodium	150	**FMVSY150/MT 76**
	250	**FMVSY250/MT 76**
	400	**FMVSY400/MT 76**
Metal Halide	175	**FMVMY175/MT 76**
	250	**FMVMY250/MT 76**
	400	**FMVMY400/MT 76**

Voltage Suffixes†

Voltage (60Hz)	Dual-Tap	Tri-Tap	Multi-Tap	480
Suffix	/DT	/TT	/MT	/480

To complete catalog number, add voltage and options suffix(es).

Options

Example: FMVMY400/MT 76 M25 V2PC20

Series | Yoke | Voltage | Metric Entry
Lamp Type | Watt | Beam Spread | Photocell

†150W HPS fixtures are furnished with ANSI spec/S55 ballasts for 55V lamps. For 100V lamps, add suffix "CE" after voltage suffix. Example: FMVSY150/MT CE 76.

Options:

Description	Suffix
Instant Restrike and Ballast Guard	
Instant restrike—enables a hot HPS lamp to immediately restrike after a momentary loss of arc due to voltage fluctuation or power outage	
Ballast guard starter cut out switch—prevents starter pulsing when lamp is cycling or inoperative; prolongs ballast and ignitor life.	
• 150W LX HPS only	**TIR**
Factory assembled with HID lamp installed	**FA**
Fused (not suitable for marine applications)	**S658**
20mm metric thread for conduit opening	**M20**
25mm metric thread for conduit opening	**M25**
3/4" NPT hub conduit opening	**NPT75**
Furnished with lamps (not installed)	**S714**
Retention chain	**S831**
Pulse-Start Metal Halide	**S828**
Enclosure machined for 2 conduit/cable entries	**S886**

Options for Photocell*:

Description	Suffix
Photocell 120V, 50/60Hz installed	**V2PC20**
Photocell 208-240V, 50/60Hz installed	**V2PC22**
Photocell 277V, 50/60Hz installed	**V2PC27**

*Photocell for Div. 2 installation only.

Accessories (Order Separately):

Slipfitter Adapter
To be mounted to yoke mount fixture
Fits onto 2" pipe/conduit **SFA6**

Wall Bracket
Use with slipfitter adapter SFA6 for easy wall mounting and increased adjustability **SWB6**

Photometric Data:

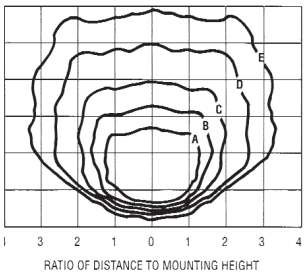

Isofootcandle Chart FMV
400W High Pressure Sodium (HPS)
Catalog Number: FMVSY400-76
Lamp: 400W Clear HPS
Lumen Rating: 50,000
For 150W HPS, multiply footcandles by .32.
For 250W HPS, multiply footcandles by 0.6.
Fixture located at 0°, 0° aiming angle at 45°

(Note: See Figures 1 and 2).

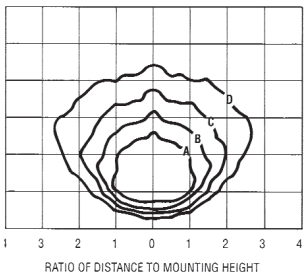

Isofootcandle Chart FMV
400W Metal Halide (MH)
Catalog Number: FMVMY400-76
Lamp: 400W Clear MH
Lumen Rating: 34,000
For 250W MH, multiply footcandles by 0.6.
Fixture located a 0°, 0° aiming angle 45°

(Note: See Figures 1 and 2).

Effective Projected Area (EPA):

- For windloading
- For proper pole selection

Aiming Angle	EPA
0°	2.9 FT^2
30°	2.5 FT^2
45°	2.1 FT^2

Footcandle Table:

Mounting Height	Footcandle Values for Isofotcandle Lines				
	A	B	C	D	E
15'	8.0	4.0	2.0	0.80	0.40
20'	4.5	2.3	1.1	0.50	0.23
25'	2.9	1.4	0.7	0.30	0.14
30'	2.0	1.0	0.5	0.20	0.10
35'	1.5	0.7	0.4	0.15	0.07
40'	1.1	0.6	0.3	0.11	0.06

1136 www.crouse-hinds.com US: 1-866-764-5454 CAN: 1-800-265-0502 Copyright© 2013 Eaton's Crouse-Hinds Business

Weights and Dimensions:

Net Fixture Weights (Lbs.):

Fixtures	FMVS	FMVM
150W	37	37
175–250W	40	42
400W	44	44

SFA6 (Slipfitter Adapter)—Add 4 lbs., SWB6 (Wall Bracket)—Add 6 lbs.

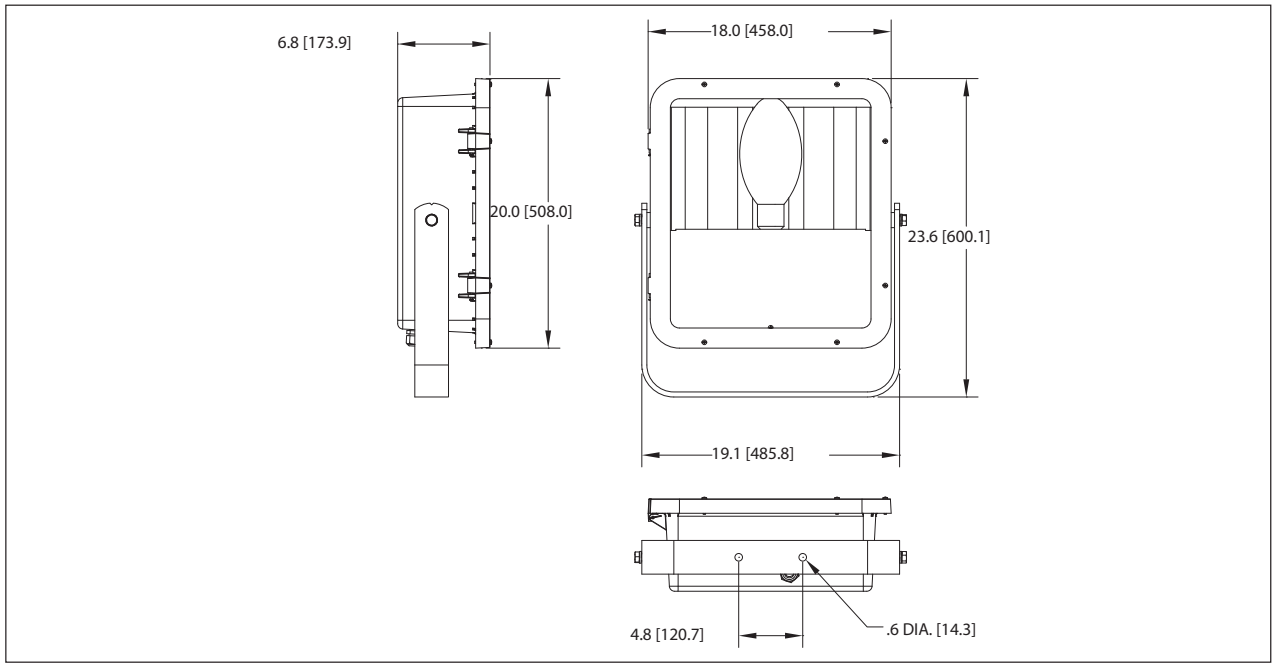

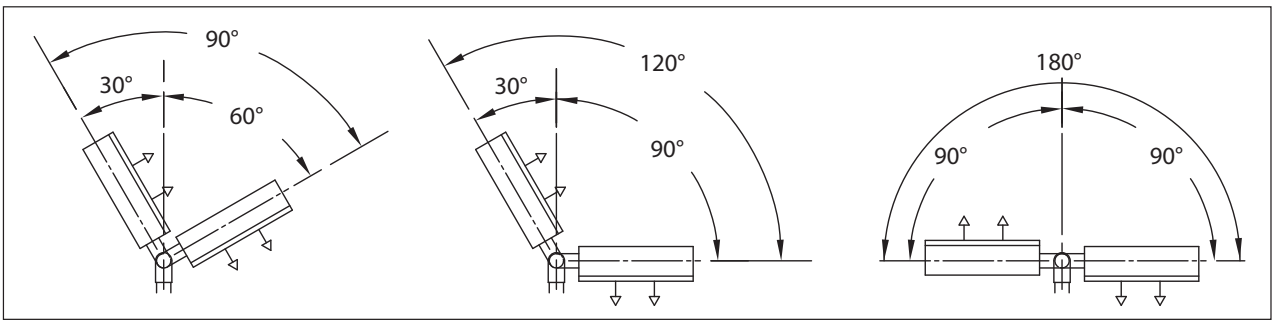

FIGURE 1 **FIGURE 2** **FIGURE 3**

 Copyright© 2013 Eaton's Crouse-Hinds Business

Champ® FMV nR Floodlights

Cl. I, Div. 2, Groups A,B,C,D
Cl. I, Zone 2, AEx nR II

Marine locations
NEMA Type 4X and IP66
Wet locations

Temperature Performance Data:

	Lamp		40°C Ambient Temperature Code			55°C Ambient Temperature Code			65°C Ambient Temperature Code			Fixture Aiming	
Catalog Series	Type	Watts	Class I, Zone 2	Class I, Div. 2	Supply Wire °C	Class I, Zone 2	Class I, Div. 2	Supply Wire °C	Class I, Zone 2	Class I, Div. 2	Supply Wire °C	Range	Figure
FMVS	High Pressure Sodium	150	T4	325	90	T4	325	90	T3	325	105	90°	1
			T4	325	90	T3	325	105	T3	325	105	120°	2
			T3	325	90	T3	325	105	T3	325	105	180°	3
		250	T4	325	90	T4	325	90	T3	325	105	90°	1
			T4	325	90	T3	325	105	T3	325	105	120°	2
			T3	325	90	T3	325	105	T3	325	105	180°	3
		400**	T3	T1	90	T3	T1	105	–	–	–	90°	1
			T3	T1	105	T3	T1	125	–	–	–	120°	2
			T3	T1	105	T3	T1	125	–	–	–	180°	3
FMVM	Metal Halide	175	T4	325	90	T4	325	90	T3	325	105	90°	1
			T4	325	90	T4	325	105	T3	325	105	120°	2
			T3	350	90	T3	350	125	T3	T1	105	180°	3
		250*	T4	325	90	T4	325	90	T3	325	105	90°	1
			T4	325	90	T4	325	105	T3	325	105	120°	2
			T3	350	90	T3	350	125	T3	T1	105	180°	3
		400**	T3	325	90	T3	325	105	–	–	–	90°	1
			T3	325	105	T3	325	125	–	–	–	120°	2
			T3	T1	105	T2	T1	125	–	–	–	180°	3
	Pulse-Start Metal Halide	175	T4	325	90	T3	325	105	T3	325	105	90°	1
			T4	325	90	T3	325	105	T3	325	105	120°	2
			T3	350	90	T3	T1	105	T3	T1	105	180°	3
		250*	T4	325	90	T3	325	105	T3	325	105	90°	1
			T4	325	90	T3	325	105	T3	325	105	120°	2
			T3	350	90	T3	T1	105	T3	T1	105	180°	3
		320**	T3	350	105	T3	350	105	–	–	–	90°	1
		350**	T3	350	105	T3	T1	125	–	–	–	120°	2
		400**	T3	T1	105	T3	T1	125	–	–	–	180°	3

*Suitable for use in 65°C ambient without optional fuses.
**Suitable for use in 55°C ambient without optional fuses.

Lamp Selection (Mogul Base):

Fixture	Watts Type	Bulb	G.E.	Osram	Philips
FMVSY150	150 HPS	ED23 ½ BT25	LU150/55	LU150/55	C150S55
FMVSY250	250 HPS	ED18 ½ or ET18	LU250	LU250	C250S50
FMVSY400	400 HPS	ED18 or BT37	LU400	LU400	C400S51
FMVMY175	175 MH	ED28 or BT28	MVR175/U	M175/U	MH175/U
FMVMY250	250 MH	ED28 or BT28	MVR250/U	M250/U	MH250/U
FMVMY400	400 MH	ED37 or BT37	MVR400/U	M400/U	MH400/U

Photometrics are available online.

 Copyright© 2015 Eaton's Crouse-Hinds Business

LITHONIA LIGHTING®

Catalog Number	
Notes	Type

FEATURES & SPECIFICATIONS

INTENDED USE

For entrances, stairwells, corridors, other pedestrian areas.

CONSTRUCTION

Cast aluminum backplate on which electrical components are mounted for maximum heat-dissipation. Gasketing between backplate and front cover prevents the entry of water and contaminants. External hardware includes phillips head and tamper-proof hex-head fasteners.

FINISH

Dark bronze (DDB) or white (DWH) front cover available for all wattages.

OPTICAL SYSTEM

Front cover/refractor is injection-molded, one-piece, UV-stabilized polycarbonate. Optical system is sealed and gasketed to inhibit entrance of outside contaminants.

ELECTRICAL SYSTEM

35W-70W HPS and 50W MH use 120V normal power factor.

Porcelain, medium-base socket with copper alloy nickel-plated screw shell and center contact. UL listed 660W, 600V, 4KV pulse rated. Medium-base lamp included with the fixture.

INSTALLATION

Units are for wall mounting and include two 3/4" knockouts for routing electrical conduit.

LISTING

UL listed for wet locations. Listed and labeled to comply with Canadian Standards.

Small Polycarbonate Wall Pack

TWS

METAL HALIDE
50W
HIGH PRESSURE SODIUM
35W, 50W, 70W
8' to 12' Mounting

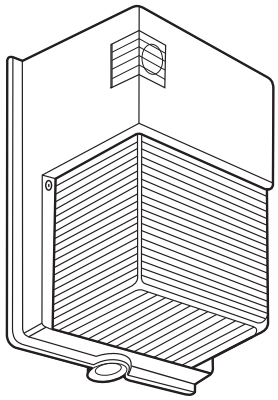

On behalf of jerickson

Specifications

Height: 11" (27.9cm)
Width: 6-1/2" (16.5cm)
Depth: 5-1/4" (13.3cm)
Weight: 4.9 lbs./2.2 kgs

ORDERING INFORMATION

For shortest lead times, configure product using **standard options (shown in bold).**
Example: TWS 50M 120 PE LPI

TWS		120	
Series	Wattage/lamp	Voltage	Options
TWS	Metal halide **50M** High pressure sodium 35S 50S **70S**	**120**	Shipped installed in fixture **PE Photoelectric cell as standard** **LPI Lamp included as standard** Architectural colors (optional) (blank) **Dark bronze** DWH White

Accessories

Order as separate catalog numbers

RK1 PEB1 Photocell kit (120V only)
TWSWG Wireguard

TWS 35S

TEST NO: LTL12508

ISOILLUMINANCE PLOT (Footcandle)

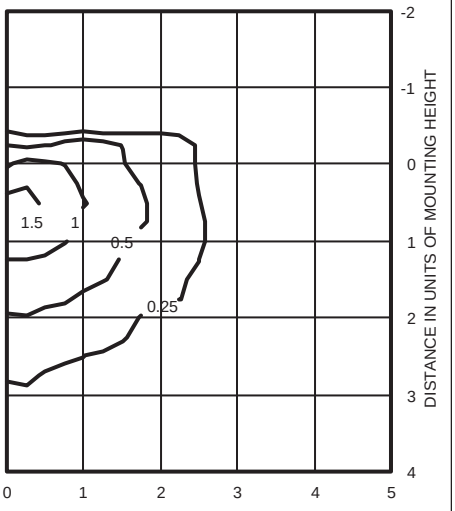

Luminaire Efficiency: 65.6%
35W high pressure sodium lamp
Footcandle values based on 8'
mounting height, 2250 rated lumens.

TWS 50S

TEST NO: LTL12306

ISOILLUMINANCE PLOT (Footcandle)

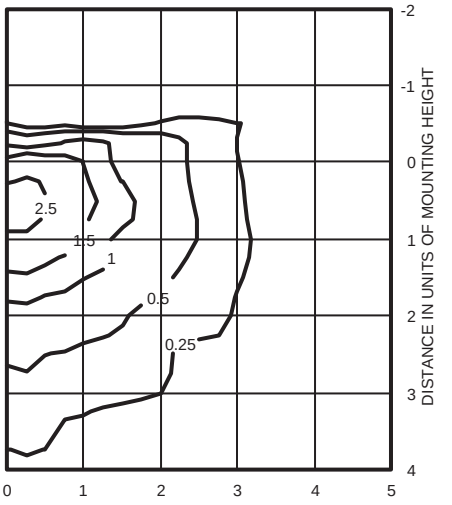

Luminaire Efficiency: 65.6%
50W high pressure sodium lamp
Footcandle values based on 8'
mounting height, 4000 rated lumens.

TWS 70S

TEST NO: LTL12509

ISOILLUMINANCE PLOT (Footcandle)

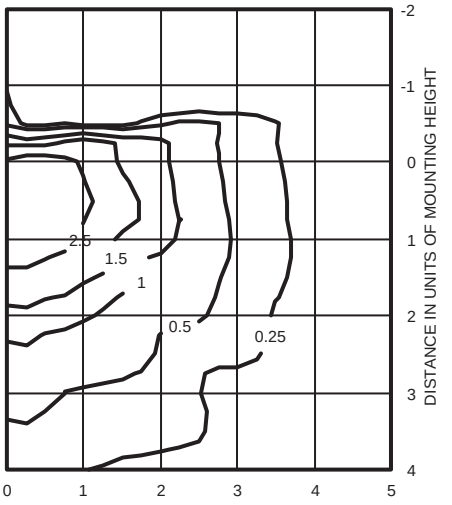

Luminaire Efficiency: 65.6%
70W high pressure sodium lamp
Footcandle values based on 8'
mounting height, 6300 rated lumens.

Mounting Height Correction Factor
(Multiply the fc level by the correction factor)

10 ft. = .64
12 ft. = .44

LITHONIA LIGHTING®
An AcuityBrands Company

Sheet #: TWS-M-S

©2004-2010 Acuity Brands Lighting, Inc. All rights reserved. Rev. 3/1/10

Lithonia Lighting
Outdoor Lighting
One Lithonia Way, Conyers, GA 30012
Phone: 770-922-9000 Fax: 770-918-1209
www.lithonia.com

VMV Series 50–175W

Champ® H.I.D. Luminaires

Cl. I, Div. 2, Groups A, B, C, D
Restricted Breathing Cl. I,
Div. 2 & Zone 2 (Suffix S826)
Cl. II, Groups E, F, G, Cl. III &
Simultaneous Presence
(HPS 50W, 70W)

Marine & Wet Locations
3, 3R, 4, 4X; IP56 to IP66

On behalf of
jerickson

Applications:

VMV series *Champ* luminaires are used:

- In manufacturing plants, refineries, chemical, petrochemical, and other industrial process facilities, waste or sewage treatment facilities, offshore, dockside, and harbor installations, and other heavy industrial applications
- In areas in which ignitible concentrations of flammable gases or vapors will be present only due to abnormal, unusual, or accidental conditions
- Where combustible dusts are present
- In marine applications where water spray and corrosive atmospheres are considerations
- In elevated ambient temperatures often found in industrial applications
- In installations where moisture, dirt, dust, vibration, corrosion, and rough usage are problems
- Wherever the damaging effects of water, wind, snow, sleet, hot sun, or any combination of these elements are found

Features:

- Compact, lightweight design is ideal for medium and low mounting heights
- Cast copper-free aluminum construction (less than 0.4 of 1% copper) and epoxy powder finish provide excellent resistance to corrosion
- Seven mounting arrangements to suit any lighting layout – pendant, flexible pendant, ceiling, wall bracket, angle stanchion, straight stanchion, and quad-mount
- Wide range of light sources and wattages to meet specifiers' needs: 50, 70, 100, and 150 watt high pressure sodium (HPS); 70, 100, 175 watt metal halide (MH and Pulse Start MH)
- Hinged ballast housing for ease of installation and maintenance
- Wide choice of photometric distributions. Glass globes, refractors and compact refractors available for all wattage luminaires; plastic refractors (for non-hazardous applications only) for 50–100 watt luminaires
- All luminaires are designed to perform in a 40°C ambient temperature. Selected luminaires are suitable for ambient temperatures up to 65°C
- Superior gasketing seals between the mounting module, housing, and optical assembly for optimum performance in wet and corrosive environments
- Hubs with an integral conduit stop and bushing to help prevent damage to field wiring during installation
- Low ambient capability to (–40°C)
- Dome and 30° angle reflectors made of bright white *Krydon*® material provide superior reflectivity, with twist-on feature requiring no tools or additional hardware. Will not chip, peel, dent, rust, or corrode
- Grounding wire for safety
- High power factor ballasts (Min P.F. 90%) and available in a variety of voltages to meet local area requirements
- Mogul base porcelain lamp socket

Certifications and Compliances:

- NEC & CEC:
  - Class I, Division 2, Groups A, B, C, D
  - HPS 50W, 70W – Class II, Class III & Simultaneous Presence (Class I, Division 2 and Class II)
  - Class I, Zone 2
- UL Standards:
  - 844 Hazardous (Classified) Locations
  - 1598 Luminaires
  - 1598A Marine Locations
- CSA Standards:
  - C22.2 No. 137
- IEC Standards:
  - 60079-15

Standard Materials:

- Ballast housings and mountings – copper-free aluminum (less than 0.4 of 1%)
- Exterior hardware – stainless steel
- Reflectors (dome and angle) – *Krydon* fiberglass-reinforced polyester material
- Globes – heat and impact resistant internally fluted glass
- Refractors – glass (50–175 watts); plastic 50–100 watts), for non-hazardous applications
- Guards: Globe – copper-free aluminum
  Refractor – stainless steel

Standard Finishes:

- Copper-free aluminum – epoxy powder coat
- *Krydon* material – high reflectance white
- Stainless steel – natural

Electrical Ratings:

- 120, 208, 240, 277, 347, 480, 600, Multi-tap (120, 208, 240 and 277)
- 50 to 150W HPS; 70 to 175W MH

Options:

The following special options are available from the factory by adding suffix to luminaire Cat. No.:

Description	Suffix
Factory Sealed Champs Class I, Division 2 & Zone 2 Provides T3 code without conduit or cable seals Restricted breathing/Non-sparking	**S865**
Restricted Breathing Construction Class I, Division 2 & Zone 2 Suitabilty Cooler Operating Temperatures (T-Numbers)	**S826**
Terminal block Furnished with terminal block, crimp terminals and dedicated voltage ballasts (no MT, DT or TT)	**S826TB**
Fused – to protect ballast and capacitors against abnormal line conditions (Not available with /MT Ballast) (Not for use in Canada) (Not suitable for marine applications)	**S658***
Quick-Clip - Holds weight of housing when closed. No need to support luminaire while screwing the housing to the cover	**S890**
Ballast-Gard™ starter cut-out switch – prevents starter pulsing when lamp is cycling or inoperative; prolongs ballast and ignitor life. Available for use with 50–150W LX HPS only	**BG**
Instant restrike – enables a hot HPS lamp to immediately restrike after a momentary loss arc due to voltage fluctuation or power outage. It has no effect on the warm-up period of cold lamps. 50–150W LX HPS only	**IR**
Quartz auxiliary lighting – comes to full brightness immediately and remains lit until the HID lamp attains 60–70% of full illumination. For non-hazardous locations only. Must use R2, R3 and R5 refractors.	**QTZ**
Refractor Mount - For ballast housing only. Used with R2, R3 and R5 refractors.	**RM**
Stainless steel insert – top hat with stainless steel threaded insert to attach ballast housing	**S806**
TEFLON coating on globe for increased shatter protection G24 only. T-Numbers not affected	**S808**
Factory assembled with H.I.D. lamps installed for additional labor savings	**FA**

Note: BG and IR options cannot be used together. IR and QTZ options cannot be used together.

Accessories:

- See pages 1022–1023 for complete listing.

TEFLON is a registered trademark of E.I. duPont Co.

*When ordering fuses for luminaires, option S658, you must specify the operating voltage. S658 cannot be ordered with /MT in the catalog number.

 Copyright© 2015 Eaton's Crouse-Hinds Business

Crouse-Hinds by EATON

VMV Series 50–150W High Pressure Sodium

Champ® H.I.D. Luminaires

Cl. I, Div. 2, Groups A, B, C, D
Restricted Breathing Cl. I,
Div. 2 & Zone 2 (Suffix S826)
Cl. II, Groups E, F, G, Cl. III &
Simultaneous Presence
(50W, 70W)

Marine & Wet Locations
3, 3R, 4, 4X; IP66

To complete the catalog #, include information in notes 1, 2 and 3 below. For guards and other optics see VMV Series - Ordering By Components page.

	Mounting Style	Hub Size	Lamp Watts	BASIC CATALOG NUMBER With G24 Globe and P21 Guard	With G241 Type I Compact Refractor *	With R5 Glass Refractor †
	Pendant Mount	¾	50	**VMVS2A050GP**	**VMVS2A050G241**	**VMVS2A050R5**
		1		**VMVS3A050GP**	**VMVS3A050G241**	**VMVS3A050R5**
		¾	70	**VMVS2A070GP**	**VMVS2A070G241**	**VMVS2A070R5**
		1		**VMVS3A070GP**	**VMVS3A070G241**	**VMVS3A070R5**
		¾	100	**VMVS2A100GP**	**VMVS2A100G241**	**VMVS2A100R5**
		1		**VMVS3A100GP**	**VMVS3A100G241**	**VMVS3A100R5**
		¾	150	**VMVS2A150GP**	**VMVS2A150G241**	**VMVS2A150R5**
		1		**VMVS3A150GP**	**VMVS3A150G241**	**VMVS3A150R5**
	Flexible Pendant Mount	¾	50	**VMVS2HA050GP**	**VMVS2HA050G241**	**VMVS2HA050R5**
		¾	70	**VMVS2HA070GP**	**VMVS2HA070G241**	**VMVS2HA070R5**
		¾	100	**VMVS2HA100GP**	**VMVS2HA100G241**	**VMVS2HA100R5**
		¾	150	**VMVS2HA150GP**	**VMVS2HA150G241**	**VMVS2HA150R5**
	Ceiling Mount Thru-Feed	¾	50	**VMVS2C050GP**	**VMVS2C050G241**	**VMVS2C050R5**
		1		**VMVS3C050GP**	**VMVS3C050G241**	**VMVS3C050R5**
		¾	70	**VMVS2C070GP**	**VMVS2C070G241**	**VMVS2C070R5**
		1		**VMVS3C070GP**	**VMVS3C070G241**	**VMVS3C070R5**
		¾	100	**VMVS2C100GP**	**VMVS2C100G241**	**VMVS2C100R5**
		1		**VMVS3C100GP**	**VMVS3C100G241**	**VMVS3C100R5**
		¾	150	**VMVS2C150GP**	**VMVS2C150G241**	**VMVS2C150R5**
		1		**VMVS3C150GP**	**VMVS3C150G241**	**VMVS3C150R5**
	Wall Mount Thru-Feed	¾	50	**VMVS2TW050GP**	**VMVS2TW050G241**	**VMVS2TW050R5**
		1		**VMVS3TW050GP**	**VMVS3TW050G241**	**VMVS3TW050R5**
		¾	70	**VMVS2TW070GP**	**VMVS2TW070G241**	**VMVS2TW070R5**
		1		**VMVS3TW070GP**	**VMVS3TW070G241**	**VMVS3TW070R5**
		¾	100	**VMVS2TW100GP**	**VMVS2TW100G241**	**VMVS2TW100R5**
		1		**VMVS3TW100GP**	**VMVS3TW100G241**	**VMVS3TW100R5**
		¾	150	**VMVS2TW150GP**	**VMVS2TW150G241**	**VMVS2TW150R5**
		1		**VMVS3TW150GP**	**VMVS3TW150G241**	**VMVS3TW150R5**
	Quad-Mount Pendant, Adjustable, Thru-Feed, 25° Angle, 12½° Angle	¾	50	**VMVS25Q050GP**	**VMVS25Q050G241**	**VMVS25Q050R5**
		¾	70	**VMVS25Q070GP**	**VMVS25Q070G241**	**VMVS25Q070R5**
		¾	100	**VMVS25Q100GP**	**VMVS25Q100G241**	**VMVS25Q100R5**
		¾	150	**VMVS25Q150GP**	**VMVS25Q150G241**	**VMVS25Q150R5**
	Stanchion Mount 25° Angle	1½	50	**VMVSJ050GP**	**VMVSJ050G241**	**VMVSJ050R5**
		1½	70	**VMVSJ070GP**	**VMVSJ070G241**	**VMVSJ070R5**
		1½	100	**VMVSJ100GP**	**VMVSJ100G241**	**VMVSJ100R5**
		1½	150	**VMVSJ150GP**	**VMVSJ150G241**	**VMVSJ150R5**
	Stanchion Mount Straight	1½	50	**VMVSP050GP**	**VMVSP050G241**	**VMVSP050R5**
		1½	70	**VMVSP070GP**	**VMVSP070G241**	**VMVSP070R5**
		1½	100	**VMVSP100GP**	**VMVSP100G241**	**VMVSP100R5**
		1½	150	**VMVSP150GP**	**VMVSP150G241**	**VMVSP150R5**

* For G243 Type III Compact Refractor, change "241" at end of catalog number to "243". Ex. VMVS2A050G243
For G245 Type V Compact Refractor, change "241" at end of catalog number to "245". Ex. VMVS2A050G245

† For R2 Glass Refractor, change "R5" at end of catalog number to "R2". Ex. VMVS2A050R2.
For R3 Glass Refractor, change "R5" at end of catalog number to "R3". Ex. VMVS2A050R3.

1. Add voltage suffix to end of catalog number

Standard Voltage Ballasts – 60Hz

	NEC/UL				CEC/CSA (cUL)		
Voltage	Multi Tap	Dual Tap	120V	480V	Tri Tap	Dual Tap	120V
Suffix	/MT	/DT	/120	/480	/TT	/DT	/120

Multi Tap and Dual Tap ballasts are powered for 277V

Optional Voltage Ballasts - 50 or 60Hz

	CEC/CSA (cUL) - CWI Isolated Ballasts				EXPORT		
Voltage	208V CWI	240V CWI	480V CWI	600V CWI	220V 60Hz	220V 50Hz	240V 50Hz
Suffix	/208CWI	/240CWI	/480CWI	/600CWI	/220	/220 50	/240 50

2. 150W HPS Luminaires: For 55V lamps - add suffix LX; for 100V lamps - add suffix CE. 50W HPS luminaire is dual tap only.

3. Options - Add the required option suffixes, see page 962, in alpha-numeric order.

Copyright© 2014 Eaton's Crouse-Hinds Business

VMV Series 150–175W Pulse Start Metal Halide

Champ® H.I.D. Luminaires

Cl. I, Div. 2, Groups A, B, C, D
Restricted Breathing Cl. I, Div. 2 & Zone 2 (Suffix S826)

Marine & Wet Locations
3, 3R, 4, 4X; IP66

To complete the catalog #, include information in note 1 below. For guards and other optics see VMV Series - Ordering By Components page.

	Mounting Style	Hub Size	Lamp Watts	BASIC CATALOG NUMBER With G24 Globe and P21 Guard	With G245 Type V Compact Refractor *	With R5 Glass Refractor †
	Pendant Mount	¾	150	**VMVM2A150GP S828**	**VMVM2A150G245 S828**	**VMVM2A150R5 S828**
		1		**VMVM3A150GP S828**	**VMVM3A150G245 S828**	**VMVM3A150R5 S828**
		¾	175	**VMVM2A175GP S828**	**VMVM2A175G245 S828**	**VMVM2A175R5 S828**
		1		**VMVM3A175GP S828**	**VMVM3A175G245 S828**	**VMVM3A175R5 S828**
	Flexible Pendant Mount	¾	150	**VMVM2HA150GP S828**	**VMVM2HA150G245 S828**	**VMVM2HA150R5 S828**
		¾	175	**VMVM2HA175GP S828**	**VMVM2HA175G245 S828**	**VMVM2HA175R5 S828**
	Ceiling Mount Thru-Feed	¾	150	**VMVM2C150GP S828**	**VMVM2C150G245 S828**	**VMVM2C150R5 S828**
		1		**VMVM3C150GP S828**	**VMVM3C150G245 S828**	**VMVM3C150R5 S828**
		¾	175	**VMVM2C175GP S828**	**VMVM2C175G245 S828**	**VMVM2C175R5 S828**
		1		**VMVM3C175GP S828**	**VMVM3C175G245 S828**	**VMVM3C175R5 S828**
	Wall Mount Thru-Feed	¾	150	**VMVM2TW150GP S828**	**VMVM2TW150G245 S828**	**VMVM2TW150R5 S828**
		1		**VMVM3TW150GP S828**	**VMVM3TW150G245 S828**	**VMVM3TW150R5 S828**
		¾	175	**VMVM2TW175GP S828**	**VMVM2TW175G245 S828**	**VMVM2TW175R5 S828**
		1		**VMVM3TW175GP S828**	**VMVM3TW175G245 S828**	**VMVM3TW175R5 S828**
	Quad-Mount Pendant, Adjustable Thru-Feed, 25° Angle, 12½° Angle	¾	150	**VMVM25Q150GP S828**	**VMVM25Q150G245 S828**	**VMVM25Q150R5 S828**
		¾	175	**VMVM25Q175GP S828**	**VMVM25Q175G245 S828**	**VMVM25Q175R5 S828**
	Stanchion Mount 25° Angle	1½	150	**VMVMJ150GP S828**	**VMVMJ150G245 S828**	**VMVMJ150R5 S828**
		1½	175	**VMVMJ175GP S828**	**VMVMJ175G245 S828**	**VMVMJ175R5 S828**
	Stanchion Mount Straight	1½	150	**VMVMP150GP S828**	**VMVMP150G245 S828**	**VMVMP150R5 S828**
		1½	175	**VMVMP175GP S828**	**VMVMP175G245 S828**	**VMVMP175R5 S828**

* For G241 Type I Compact Refractor, change "245" at end of catalog number to "241". Ex. VMVM2A150G241-S828
For G243 Type III Compact Refractor, change "245" at end of catalog number to "243". Ex. VMVM2A150G243-S828

† For R2 Glass Refractor, change "R5" at end of catalog number to "R2". Ex. VMVM2A150R2-S828.
For R3 Glass Refractor, change "R5" at end of catalog number to "R3". Ex. VMVM2A150R3-S828.

1. Add voltage suffix to end of catalog number

Standard Voltage Ballasts – 60Hz

	NEC/UL			CEC/CSA (cUL)	
Voltage	Multi Tap	120V	480V	Tri Tap	120V
Suffix	/MT	/120	/480	/TT	/120

Optional Voltage Ballasts - 50 or 60Hz

	EXPORT			
Voltage	220V 60Hz	220V 50Hz	230V 50Hz	240V 50Hz
Suffix	/220	/220 50	/230 50	/240 50

 Copyright© 2014 Eaton's Crouse-Hinds Business

Crouse-Hinds by EATON

Champ® H.I.D. Luminaires

To complete the catalog #, include information in notes 1, 2 and 3 below. For guards and other optics see VMV Series - Ordering By Components page.

	Mounting Style	Hub Size	Lamp Watts	BASIC CATALOG NUMBER With G24 Globe and P21 Guard	With G241 Type I Compact Refractor *	With R5 Glass Refractor †
	Pendant Mount	¾	70	**VMVM2A070GP**	**VMVM2A070G241**	**VMVM2A070R5**
		1		**VMVM3A070GP**	**VMVM3A070G241**	**VMVM3A070R5**
		¾	100	**VMVM2A100GP**	**VMVM2A100G241**	**VMVM2A100R5**
		1		**VMVM3A100GP**	**VMVM3A100G241**	**VMVM3A100R5**
		¾	175	**VMVM2A175GP**	**VMVM2A175G241**	**VMVM2A175R5**
		1		**VMVM3A175GP**	**VMVM3A175G241**	**VMVM3A175R5**
	Flexible Pendant Mount	¾	70	**VMVM2HA070GP**	**VMVM2HA070G241**	**VMVM2HA070R5**
		¾	100	**VMVM2HA100GP**	**VMVM2HA100G241**	**VMVM2HA100R5**
		¾	175	**VMVM2HA175GP**	**VMVM2HA175G241**	**VMVM2HA175R5**
	Ceiling Mount Thru-Feed	¾	70	**VMVM2C070GP**	**VMVM2C070G241**	**VMVM2C070R5**
		1		**VMVM3C070GP**	**VMVM3C070G241**	**VMVM3C070R5**
		¾	100	**VMVM2C100GP**	**VMVM2C100G241**	**VMVM2C100R5**
		1		**VMVM3C100GP**	**VMVM3C100G241**	**VMVM3C100R5**
		¾	175	**VMVM2C175GP**	**VMVM2C175G241**	**VMVM2C175R5**
		1		**VMVM3C175GP**	**VMVM3C175G241**	**VMVM3C175R5**
	Wall Mount Thru-Feed	¾	70	**VMVM2TW070GP**	**VMVM2TW070G241**	**VMVM2TW070R5**
		1		**VMVM3TW070GP**	**VMVM3TW070G241**	**VMVM3TW070R5**
		¾	100	**VMVM2TW100GP**	**VMVM2TW100G241**	**VMVM2TW100R5**
		1		**VMVM3TW100GP**	**VMVM3TW100G241**	**VMVM3TW100R5**
		¾	175	**VMVM2TW175GP**	**VMVM2TW175G241**	**VMVM2TW175R5**
		1		**VMVM3TW175GP**	**VMVM3TW175G241**	**VMVM3TW175R5**
	Quad-Mount Pendant, Adjustable Thru-Feed, 25° Angle, 12½° Angle	¾	70	**VMVM25Q070GP**	**VMVM25Q070G241**	**VMVM25Q070R5**
		¾	100	**VMVM25Q100GP**	**VMVM25Q100G241**	**VMVM25Q100R5**
		¾	175	**VMVM25Q175GP**	**VMVM25Q175G241**	**VMVM25Q175R5**
	Stanchion Mount 25° Angle	1½	70	**VMVMJ070GP**	**VMVMJ070G241**	**VMVMJ070R5**
		1½	100	**VMVMJ100GP**	**VMVMJ100G241**	**VMVMJ100R5**
		1½	175	**VMVMJ175GP**	**VMVMJ175G241**	**VMVMJ175R5**
	Stanchion Mount Straight	1½	70	**VMVMP070GP**	**VMVMP070G241**	**VMVMP070R5**
		1½	100	**VMVMP100GP**	**VMVMP100G241**	**VMVMP100R5**
		1½	175	**VMVMP175GP**	**VMVMP175G241**	**VMVMP175R5**

* For G243 Type III Compact Refractor, change "241" at end of catalog number to "243". Ex. VMVM2A070G243
For G245 Type V Compact Refractor, change "241" at end of catalog number to "245". Ex. VMVM2A070G245

† For R2 Glass Refractor, change "R5" at end of catalog number to "R2". Ex. VMVM2A070R2.
For R3 Glass Refractor, change "R5" at end of catalog number to "R3". Ex. VMVM2A070R3.

1. Add voltage suffix to end of catalog number

Standard Voltage Ballasts – 60Hz

	NEC/UL			CEC/CSA (cUL)	
Voltage	Multi Tap	120V	480V	Tri Tap	120V
Suffix	/MT	/120	/480	/TT	/120

Optional Voltage Ballasts - 50 or 60Hz

	CEC/CSA (cUL) - CWI Isolated Ballasts			EXPORT			
Voltage	208V CWI	480V CWI	600V CWI	220V 60Hz	220V 50Hz	230V 50Hz	240V 50Hz
Suffix	/208CWI	/240CWI	/600CWI	/220	/220 50	/230 50	/240 50

2. 70W ballast not available in 480V.

3. Options - Add the required option suffixes, see page 962, in alpha-numeric order.

Copyright© 2014 Eaton's Crouse-Hinds Business

VMV Series – Ordering by Components

VMV luminaires are available in components.

A complete luminaire consists of:

I. Champ Cover (Mounting Module)

II. VMV Ballast Housing – Include voltage and required option(s)

III. Optical & Guard components – Globe, Reflector, Refractor, Guard

I. Champ Cover (Mounting Module):

Type	Conduit	Cat. #
Pendant	¾"	**APM2**
	1"	**APM3**
Flexible Pendant	¾"	**HPM2**
Ceiling*	¾"	**CM2**
	1"	**CM3**
Wall	¾"	**TWM2**
	1"	**TWM3**
Stanchion – 25 Degree Angle	1½"	**JM5**
Stanchion – Straight	1½"	**PM5**
Quad-Mount	¾"	**QM25**

*Not available with V2PC photocell.

II. Ballast Housings:

Complete catalog number must have the **voltage suffix** (MT shown) and any **options suffixes**.

Lamp Type	Lamp Watts	Cat. # For Globe and Compact Refractor	Cat. # For Large Refractor
High Pressure Sodium	50	**VMVS050/DT**	**VMVS050/MT RM**
	70	**VMVS070/MT**	**VMVS070/MT RM**
	100	**VMVS100/MT**	**VMVS100/MT RM**
	150	**VMVS150/MT LX**	**VMVS150/MT LX RM**
Metal Halide	70	**VMVM070/MT**	**VMVM070/TT RM**
	100	**VMVM100/MT**	**VMVM100/MT RM**
	175	**VMVM175/MT**	**VMVM175/MT RM**

III. Globe, Reflectors, Refractors, Guards:

Type	Cat. #
Globe	**G24**
Globe – Teflon Coated	**G24 S808**
Globe Guard	**P21**
Reflector – Dome	**RD70**
Reflector – Angle	**RA70**
Compact Refractor Type 1	**G241**
Compact Refractor Type 3	**G243**
Compact Refractor Type 5	**G245**
Compact Refractor Guard	**P241**
Large Refractor Type 2	**R2**
Large Refractor Type 3	**R3**
Large Refractor Type 5	**R5**
Large Refractor Guard	**P23**
Large Plastic Refractor Type 2	**PR2**
Large Plastic Refractor Type 3	**PR3**
Large Plastic Refractor Type 5	**PR5**

 Copyright© 2015 Eaton's Crouse-Hinds Business

Champ® H.I.D. Luminaires

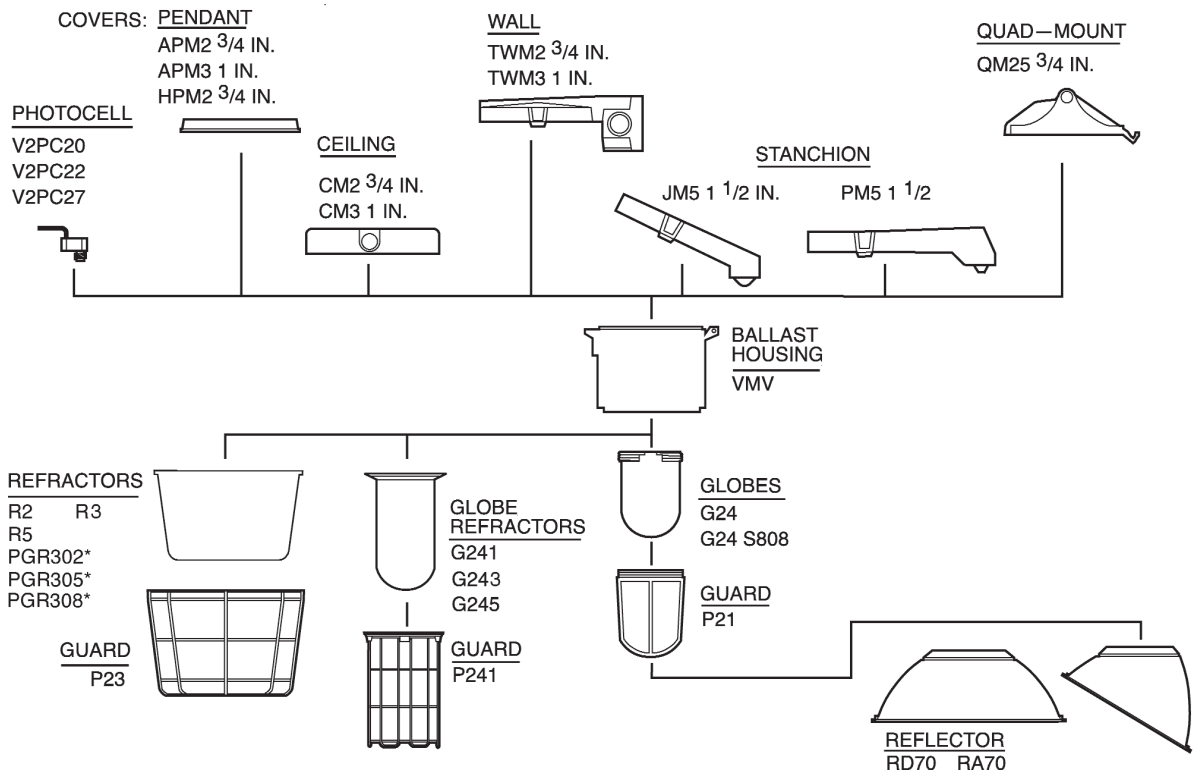

*Plastic refractors are for non-hazardous areas only (50–100W Max.)

 Copyright© 2013 Eaton's Crouse-Hinds Business

Champ® H.I.D. Luminaires

	Lamp		Rated Ambient °C	Class I, Division 2				Class II, Division 1		Class I, Zone 2		Supply Wire Suitable For °C	
Cat. #	Wattage	Type		Globe (G24, G241, G245)	Globe (G24) w/ Reflector (RA70 or RD70)	Refractor (R2, R3, or R5)	Group	Globe (G24) w/ or w/o Reflector (RA70 or RD70)	Simultaneous Presence Class I, Div. 2 Class II, Div. 1	Restricted Breathing Suffix S826 w/ Globe (G24, G241, G245)	Factory Sealed Suffix S865 AEx nA nR II	Globe (G24, G241, G245)	Refractor (R2, R3, or R5)
VMVM70	70	MH	40	T3A	T3A	T3A		T3A		T5	T3	90	90
VMVM70	70	MH	55	T3	T3	T3		T3		T4	T3	90	90
VMVM70	70	MH	65	T3	T3	T3		T3		T4	T3	90	90
VMVM100	100	MH	40	T2D	T2D	T2D		T2D		T4	T3	90	90
VMVM100 S849	100	MH	40	T2	T2	T2		T2		T4	T3	75	75
VMVM100	100	MH	55	T2D	T2D	T2D		T2D		T4	T3	90	90
VMVM150	150	MH	40	T2A	T2A	T2B		T2A		T3	T3	90	90
VMVM175	175	MH	40	T2A	T2A	T2B		T2A		T3	T3	90	90
VMVS50	50	HPS	40	T3A	T3A	T3B	EFG	T4A	T3A	T5	T3	75	65
VMVS50	50	HPS	55	T3A	T3A	T3A	EFG	T4	T3	T5	T3	75	75
VMVS50	50	HPS	65	T3	T3	T3	EFG	T4	T2D	T5	T3	75	75
VMVS70	70	HPS	40	T3	T3	T3B	EFG	T3C	T2C	T4	T3	75	65
VMVS70	70	HPS	55	T3	T3	T3	EFG	T3C	T2B	T4	T3	90	90
VMVS100	100	HPS	40	T2C	T2C	T2D	EFG	T3A	T2A	T4	T3	90	75
VMVS100	100	HPS	55	T2B	T2B	T2C	EFG			T3	T3	105	90
VMVS150	150	HPS	40	T2A	T2A	T2B				T3	T3	90	85
VMVS150	150	HPS	55	T2	T2	T2A				T3	T3	105	105
VMVIG055	55	Induction	40	T2C	T2C	—				T6	—	65	—
VMVIG055	55	Induction	55	T2C	T2C	—				T5	—	65	—

The Class I, Division 2 T-codes apply to luminaires without the restricted breathing (S826) or factory sealed (S865) options. These luminaires are listed to UL 844. UL844 specifies how the temperatures are measured.

The Class I, Zone 2 T-codes are for luminaires that are additionally listed to UL 60079-15 that specify a different method for measuring temperatures. Since NEC® 501.1 states that equipment "…for use in Class I, Zone 0, 1, or 2 locations shall be permitted in Class I, Division 2 locations…" then these luminaires are suitable for Class I, Division 2 but with cooler temperature ratings. They also have the advantage of meeting the more rigorous mechanical tests of UL 844.

 Copyright© 2014 Eaton's Crouse-Hinds Business

Dimensions
In Inches:

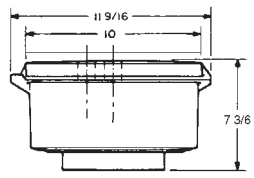

Pendant Mount

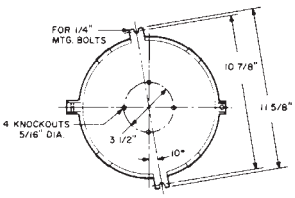

Ceiling Mount Top View

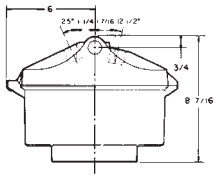

Quad-Mount

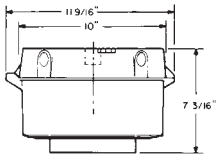

Ceiling Mount

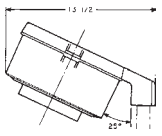

25° Angle Stanchion Mount

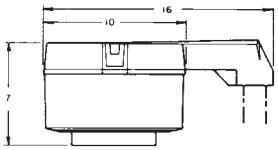

Straight Stanchion Mount

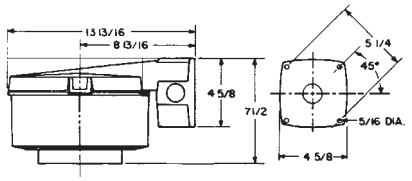

Wall Mount

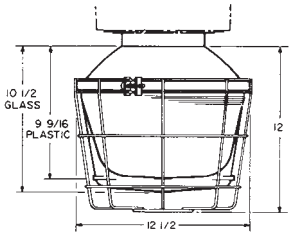

Luminaire With: Refractors, Guard

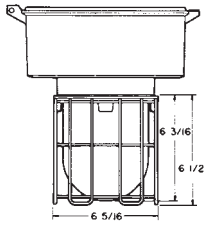

Compact Refractor

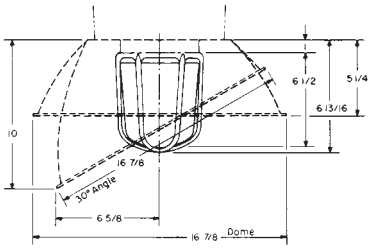

Globe, Guard, Reflectors

Net Luminaire Weights:

Luminaire Series	Lamp Watts 50	70	100	150	175
Luminaire with Globe, Guards (lbs.):					
VMVS	13½	14½	14½	14½	
VMVM		13	13¼		15½
Luminaire with Glass Refractor (lbs.):					
VMVS	21¾	22¾	22¾	22¾	
VMVM		21	21½		23¾

Type	Lbs.	Type	Lbs.
Add for mounting modules:			
Pendant	1¼	Quad-Mount	3½
Flexible Pendant	1½	Angle Stanchion	3½
Ceiling	2¾	Straight Stanchion	4½
Wall	4½		
Add for reflectors:			
Dome	1½	30° Angle	1½

Deduct: ½" lb. for fixture without P21 Guard

 Copyright© 2013 Eaton's Crouse-Hinds Business

Champ® H.I.D. Luminaires

Lamp: 100W/E – 23½ high pressure sodium (HPS)
Total bare lamp lumens: 9500

NOTE: All data provided is for high pressure sodium luminaires with 100W/E–23-½ clear lamps. Use conversion factors (multipliers) shown below for other clear lamp types and wattages. Consult Eaton's Crouse-Hinds for additional photometric data on any *Champ* Series luminaire.

Luminaire with Globe and Dome Reflector

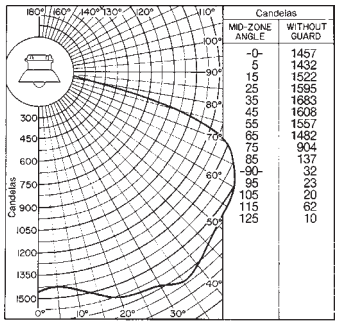

Multipliers (for use with candela curve only).

Luminaire Series	Lamp Watts	Conversion Factor
	50	0.42
VMVS	70	0.67
	150	1.68

Luminaire spacing ratio: 1.85

Coefficient of Utilization

Effective Floor Cavity Reflectance 20%

% Reflectance		Room Cavity Ratio				
Eff. Ceil.	Wall	1	2	3	4	5
	50	.823	.707	.610	.529	.464
80	30	.784	.646	.538	.451	.384
	10	.749	.594	.482	.391	.324
	50	.804	.690	.597	.517	.452
70	30	.767	.633	.530	.445	.377
	10	.734	.587	.477	.388	.321
	50	.765	.658	.571	.494	.434
50	30	.735	.611	.513	.431	.368
	10	.709	.569	.466	.381	.318
	50	.731	.629	.546	.473	.416
30	30	.708	.591	.497	.419	.357
	10	.685	.555	.456	.375	.312
	50	.701	.603	.524	.454	.399
10	30	.681	.569	.482	.406	.348
	10	.662	.541	.446	.367	.307
0	0	.644	.521	.427	.348	.288

% Reflectance		Room Cavity Ratio				
Eff. Ceil.	Wall	6	7	8	9	10
	50	.412	.366	.326	.296	.258
80	30	.334	.290	.253	.224	.187
	10	.278	.239	.201	.175	.142
	50	.403	.359	.320	.291	.252
70	30	.329	.285	.250	.221	.187
	10	.274	.235	.200	.174	.142
	50	.386	.344	.307	.279	.244
50	30	.320	.277	.244	.216	.182
	10	.271	.231	.197	.172	.140
	50	.371	.329	.296	.269	.235
30	30	.312	.272	.237	.210	.178
	10	.267	.227	.195	.170	.137
	50	.357	.319	.285	.260	.227
10	30	.304	.266	.232	.206	.173
	10	.263	.224	.192	.167	.135
0	0	.245	.207	.176	.152	.120

Isofootcandle Chart: Luminaire with Globe and Dome Reflector

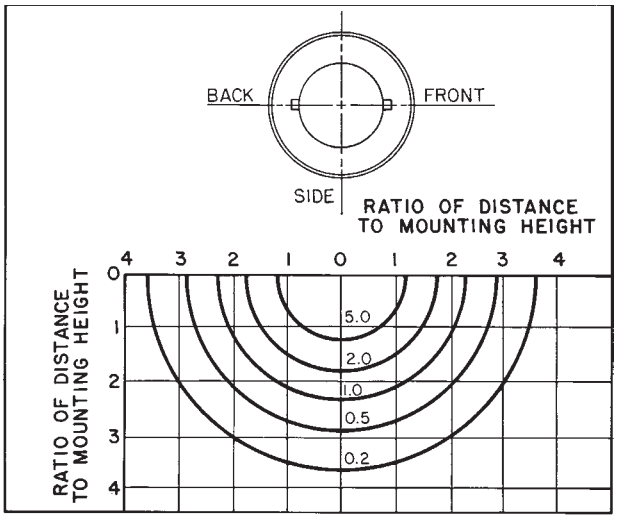

Isofootcandle Chart: Luminaire with Globe and 30° Angle Reflector

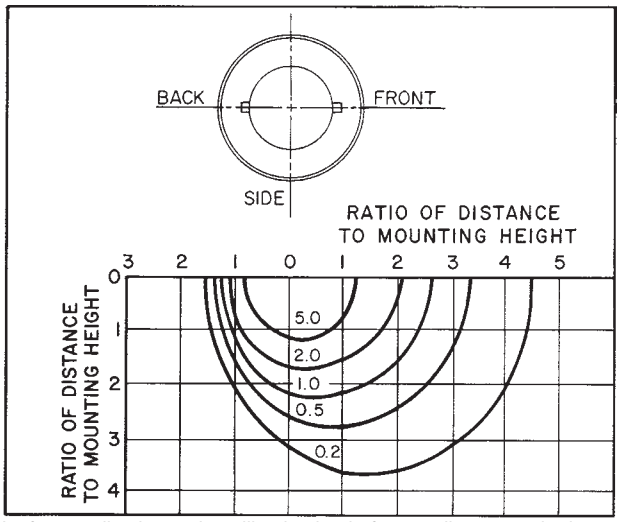

Isofootcandle charts show illumination in footcandles on work plane 10 feet below light center. Multiply by factor shown to convert to other mounting heights.

Height (Ft.)	Factor	Height (Ft.)	Factor
6	2.78	14	0.51
8	1.56	16	0.39
12	0.70		

www.crouse-hinds.com US: 1-866-764-5454 CAN: 1-800-265-0502 Copyright© 2013 Eaton's Crouse-Hinds Business

Crouse-Hinds by EATON

Champ® H.I.D. Luminaires

Lamp: 100W/E0 – 23½ high pressure sodium (HPS)

Luminaire with I.E.S. Type V Glass Refractor

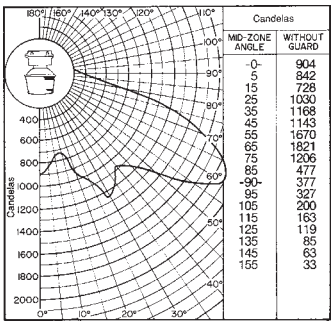

MID-ZONE ANGLE	WITHOUT GUARD
0	904
5	842
15	728
25	1030
35	1168
45	1143
55	1670
65	1821
75	1206
85	477
90	377
95	327
105	200
115	163
125	119
135	85
145	63
155	33

NOTE: Photometric data was developed using a 100 watt clear high pressure sodium lamp (9500 lumens). For other clear lamps, use the following conversion factors (multipliers):

Luminaire Series	Lamp Watts	Conversion Factor
VMVS	50	0.42
	70	0.67
	150	1.68

Luminaire spacing ratio: 2.0

Coefficient of Utilization

Effective Floor Cavity Reflectance 20%

% Reflectance Eff. Ceil.	Wall	Room Cavity Ratio 1	2	3	4	5
80	50	.848	.709	.597	.508	.437
	30	.796	.631	.509	.414	.343
	10	.750	.566	.439	.341	.271
70	50	.818	.682	.576	.489	.419
	30	.770	.611	.493	.402	.331
	10	.726	.552	.428	.334	.264
50	50	.759	.632	.533	.451	.389
	30	.720	.574	.464	.377	.312
	10	.685	.521	.407	.318	.253
30	50	.706	.586	.493	.417	.359
	30	.675	.538	.435	.354	.291
	10	.645	.495	.386	.302	.240
10	50	.658	.544	.457	.385	.331
	30	.632	.504	.408	.331	.274
	10	.608	.469	.366	.286	.227
0	0	.581	.441	.340	.260	.203

% Reflectance Eff. Ceil.	Wall	Room Cavity Ratio 6	7	8	9	10
80	50	.384	.337	.299	.272	.238
	30	.292	.249	.214	.189	.159
	10	.226	.189	.154	.132	.103
70	50	.369	.325	.288	.262	.229
	30	.283	.240	.203	.183	.156
	10	.218	.182	.150	.130	.105
50	50	.341	.301	.266	.243	.214
	30	.266	.225	.195	.173	.146
	10	.209	.173	.143	.124	.099
30	50	.316	.277	.248	.225	.198
	30	.249	.213	.182	.161	.136
	10	.199	.163	.136	.117	.093
10	50	.292	.258	.223	.209	.134
	30	.233	.200	.171	.151	.127
	10	.188	.154	.128	.110	.087
0	0	.165	.133	.108	.091	.070

 Copyright© 2013 Eaton's Crouse-Hinds Business

GE
Lighting

Evolve™ LED Roadway Lighting

LED Streetlight (ERL1)

imagination at work

Product Features

The Evolve™ LED Streetlight is optimized for customers requiring a basic LED solution for local and collector roadways. GE's unique reflective optics are designed to optimize application efficiency and minimize glare. The modern design incorporates the heat sink directly into the unit for heat transfer to prolong LED life. This reliable unit has a 50,000 hour rated life, significantly reducing maintenance needs and expense over the life of the fixture. This efficient solution lowers energy consumption compared to traditional HID fixture for additional operating cost savings.

Applications

- Designed to meet recommended luminance and illuminance requirements for local and collector roadway/street classifications.

Housing

- The modern design incorporates Casting-integral heatsink for maximum heat transfer
- Meets 3G vibration standards per ANSI C136.31-2010.
- Metal door

LED & Optical Assembly

- Structured LED array for optimized roadway photometric distribution.
- Evolve™ light engine consisting of reflective technology designed to optimize application efficiency and minimize glare.
- Utilizes high brightness LEDs, 70 CRI at 3000K & 4000K typical.
- LM-79 tests and reports are performed in accordance with IESNA standards.

Ratings

- /c listed, suitable for wet locations per UL 1598.
- IP65 rated optical enclosure per ANSI C136.25-2009.
- Temperature rated at –40° to 40°C.
- Upward Light Output Ratio (ULOR) = 0
- Compliant with the material restriction requirements of RoHS.
- DLC listed.

Mounting

- 2 or 4 Bolt Slipfitter with +/- 5 degree of adjustment for leveling.
- Integral die cast mounting pipe stop feature.
- Adjustable for 1.25 in. or 2 in. mounting pipe.

Finish

- Corrosion resistant polyester powder paint, minimum 2.0 mil. thickness.
- Standard colors: Black and Gray.
- RAL & custom colors available.
- Coastal Finish.

Electrical

- 120-277 volt and 347-480 volt.
- System power factor is >90% and THD <20%.*
- Class "A" Sound rating.
- Surge Protection per ANSI C136.2-2014
  - Standard: 6Kv/3kA "Basic" (w/extended C62.41.2 Combination Wave capacity of 120 events)
  - Optional: 10kV/5kA "Enhanced"
- Photo electric sensors (PE) available for all voltages.

** System THD < 26% for 347/480V supply with A7 power level*

Lumen Maintenance

- Projected L87 (10K) ≥ 50,000 at Ta 25C (Power Levels: A7, B7, C7).
- Projected L90 (16K) ≥ 50,000 at Ta 25C (Power Levels: D3, E3).
- Projected L70 (10K) > 100,000 at Ta 25C.

Ordering Number Logic

Evolve™ LED Streetlight (ERL1)

E R L 1 _ _ _ _ _ _ _ _ _ _ **A** _ _ _ _ _ _ _ _ **R** _ _ _

PROD. ID	VOLTAGE	POWER LEVEL	PHOTOMETRIC TYPE	LED COLOR TEMP	PE FUNCTION	COLOR	OPTIONS
E = Evolve **R** = Roadway **L** = Local **1** = Single Module	**0** = 120-277* **1** = 120 **2** = 208 **3** = 240 **4** = 277 **5** = 480 **D** = 347 **H** = 347-480* * Not available with Fusing. Must choose a descreet voltage with F option.	**A7** **B7** **C7** **D3** **E3**	**A1** = Extra Narrow Asymmetric **B1** = Narrow Asymmetric (Medium) **C1** = Asymmetric (Short) **D1** = Asymmetric Forward **E1** = Asymmetric (Medium)	**30** = 3000K **40** = 4000K	**2** = STD PE Rec **4** = STD PE Rec with Shorting Cap **5** = STD PE Rec with PE # **A** = ANSI C136.41 7 pin **D** = 7 pin receptacle with Shorting Cap # PE control not available for 347-480V. Must be a discrete voltage (347V or 480V).	**GRAY** = Gray **BLCK** = Black	**A** = 4 Bolt Slipfitter* **F** = Fusing **I** = IP66 Optical **R** = Secondary Enhanced Surge Protection (10kV/5kA) **L** = Tool-Less Entry **XXX** = Special Options **X** = Single Package **Y** = Coastal Finish **NOTE:** Standard Package is 20 fixtures/Skid * Contact manufacturer for Lead-Time.

PRODUCT ID	POWER LEVEL	PHOTOMETRIC TYPE	TYPICAL INITIAL WATTAGE 120-277V	TYPICAL INITIAL WATTAGE 347-480V	TYPICAL INITIAL LUMENS 3000K	TYPICAL INITIAL LUMENS 4000K	TYPICAL INITIAL LPW 120-277V 3000K	TYPICAL INITIAL LPW 120-277V 4000K	TYPICAL INITIAL LPW 347-480V 3000K	TYPICAL INITIAL LPW 347-480V 4000K	BUG RATING 3000K	BUG RATING 4000K
ERL1	A7	A1	29	34	3000	3100	103	107	88	91	1-0-1	1-0-1
ERL1		B1			3100	3200	107	110	91	94	1-0-1	1-0-1
ERL1		C1			3100	3200	107	110	91	94	1-0-1	1-0-1
ERL1		D1			3000	3100	103	107	88	91	1-0-1	1-0-1
ERL1		E1			3100	3200	107	110	91	94	1-0-1	1-0-1
ERL1	B7	A1	39	44	3800	3900	97	100	86	89	1-0-1	1-0-1
ERL1		B1			4000	4100	103	105	91	93	1-0-1	1-0-1
ERL1		C1			4000	4100	103	105	91	93	1-0-1	1-0-1
ERL1		D1			3800	3900	97	100	86	89	1-0-1	1-0-1
ERL1		E1			4000	4100	103	105	91	93	1-0-1	1-0-1
ERL1	C7	A1	51	55	4700	4800	92	94	85	87	2-0-1	2-0-1
ERL1		B1			4900	5000	96	98	89	91	2-0-1	2-0-1
ERL1		C1			4900	5000	96	98	89	91	2-0-1	2-0-1
ERL1		D1			4700	4800	92	94	85	87	1-0-1	1-0-1
ERL1		E1			4900	5000	96	98	89	91	1-0-1	2-0-1
ERL1	D3	A1	70		5500	6700	79	96	79	96	2-0-1	2-0-2
ERL1		B1			5800	7000	83	100	83	100	2-0-1	2-0-1
ERL1		C1			5800	7000	83	100	83	100	2-0-1	2-0-1
ERL1		D1			5500	6700	79	96	79	96	1-0-1	2-0-1
ERL1		E1			5800	7000	83	100	83	100	2-0-1	2-0-1
ERL1	E3	A1	91		6700	8400	74	92	74	92	2-0-2	2-0-2
ERL1		B1			6800	8500	75	93	75	93	2-0-1	2-0-1
ERL1		C1			6800	8500	75	93	75	93	2-0-1	2-0-1
ERL1		D1			6700	8400	74	92	74	92	2-0-1	2-0-2
ERL1		E1			6800	8500	75	93	75	93	2-0-1	2-0-1

NOTES:

- Max Operating Temp 40° C

Product IES Files

Evolve™ LED Streetlight (ERL1)

PRODUCT ID	POWER LEVEL	PHOTOMETRIC TYPE	IES FILE NUMBERS 3000K 120-277V	IES FILE NUMBERS 3000K 347-480V	IES FILE NUMBERS 4000K 120-277V	IES FILE NUMBERS 4000K 347-480V
ERL1	A7	A1	ERL1_A7A130_____-120-277V.IES	ERL1_A7A130_____-347-480V.IES	ERL1_A7A140_____-120-277V.IES	ERL1_A7A140_____-347-480V.IES
ERL1		B1	ERL1_A7B130_____-120-277V.IES	ERL1_A7B130_____-347-480V.IES	ERL1_A7B140_____-120-277V.IES	ERL1_A7B140_____-347-480V.IES
ERL1		C1	ERL1_A7C130_____-120-277V.IES	ERL1_A7C130_____-347-480V.IES	ERL1_A7C140_____-120-277V.IES	ERL1_A7C140_____-347-480V.IES
ERL1		D1	ERL1_A7D130_____-120-277V.IES	ERL1_A7D130_____-347-480V.IES	ERL1_A7D140_____-120-277V.IES	ERL1_A7D140_____-347-480V.IES
ERL1		E1	ERL1_A7E130_____-120-277V.IES	ERL1_A7E130_____-347-480V.IES	ERL1_A7E140_____-120-277V.IES	ERL1_A7E140_____-347-480V.IES
ERL1	B7	A1	ERL1_B7A130_____-120-277V.IES	ERL1_B7A130_____-347-480V.IES	ERL1_B7A140_____-120-277V.IES	ERL1_B7A140_____-347-480V.IES
ERL1		B1	ERL1_B7B130_____-120-277V.IES	ERL1_B7B130_____-347-480V.IES	ERL1_B7B140_____-120-277V.IES	ERL1_B7B140_____-347-480V.IES
ERL1		C1	ERL1_B7C130_____-120-277V.IES	ERL1_B7C130_____-347-480V.IES	ERL1_B7C140_____-120-277V.IES	ERL1_B7C140_____-347-480V.IES
ERL1		D1	ERL1_B7D130_____-120-277V.IES	ERL1_B7D130_____-347-480V.IES	ERL1_B7D140_____-120-277V.IES	ERL1_B7D140_____-347-480V.IES
ERL1		E1	ERL1_B7E130_____-120-277V.IES	ERL1_B7E130_____-347-480V.IES	ERL1_B7E140_____-120-277V.IES	ERL1_B7E140_____-347-480V.IES
ERL1	C7	A1	ERL1_C7A130_____-120-277V.IES	ERL1_C7A130_____-347-480V.IES	ERL1_C7A140_____-120-277V.IES	ERL1_C7A140_____-347-480V.IES
ERL1		B1	ERL1_C7B130_____-120-277V.IES	ERL1_C7B130_____-347-480V.IES	ERL1_C7B140_____-120-277V.IES	ERL1_C7B140_____-347-480V.IES
ERL1		C1	ERL1_C7C130_____-120-277V.IES	ERL1_C7C130_____-347-480V.IES	ERL1_C7C140_____-120-277V.IES	ERL1_C7C140_____-347-480V.IES
ERL1		D1	ERL1_C7D130_____-120-277V.IES	ERL1_C7D130_____-347-480V.IES	ERL1_C7D140_____-120-277V.IES	ERL1_C7D140_____-347-480V.IES
ERL1		E1	ERL1_C7E130_____-120-277V.IES	ERL1_C7E130_____-347-480V.IES	ERL1_C7E140_____-120-277V.IES	ERL1_C7E140_____-347-480V.IES
ERL1	D3	A1	ERL1_D3A130_____.IES		ERL1_D3A140_____.IES	
ERL1		B1	ERL1_D3B130_____.IES		ERL1_D3B140_____.IES	
ERL1		C1	ERL1_D3C130_____.IES		ERL1_D3C140_____.IES	
ERL1		D1	ERL1_D3D130_____.IES		ERL1_D3D140_____.IES	
ERL1		E1	ERL1_D3E130_____.IES		ERL1_D3E140_____.IES	
ERL1	E3	A1	ERL1_E3A130_____.IES		ERL1_E3A140_____.IES	
ERL1		B1	ERL1_E3B130_____.IES		ERL1_E3B140_____.IES	
ERL1		C1	ERL1_E3C130_____.IES		ERL1_E3C140_____.IES	
ERL1		D1	ERL1_E3D130_____.IES		ERL1_E3D140_____.IES	
ERL1		E1	ERL1_E3E130_____.IES		ERL1_E3E140_____.IES	

Photometrics

Evolve™ LED Streetlight (ERL1)

ERL1 Extra Narrow Asymmetric (E3A1)

8,400 Lumens
4000K
ERL1_E3A140

ISO Plot

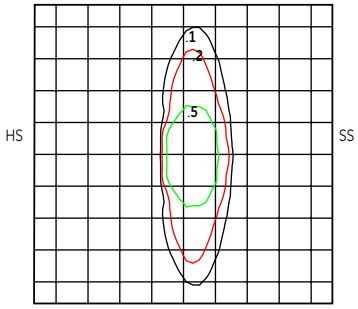

Grid Distance in Units of Mounting Height at 30' Initial Footcandle Values at Grade

Polar Curve

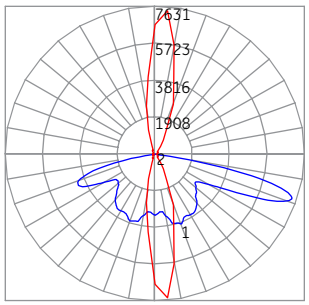

Vertical plane through horizontal angle of maximum candlepower at 85°
Vertical plane through horizontal angle of 72°

CU Graph

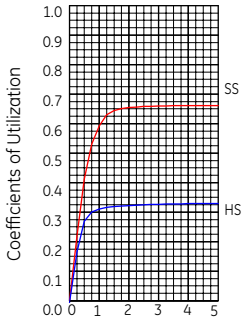

Street Width/Mounting Height

ERL1 Narrow Asymmetric (E3B1)

8,500 Lumens
4000K
ERL1_E3B140

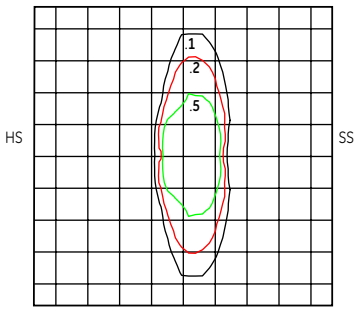

Grid Distance in Units of Mounting Height at 30' Initial Footcandle Values at Grade

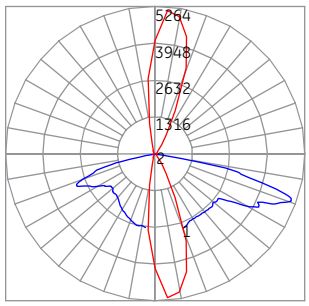

Vertical plane through horizontal angle of maximum candlepower at 85°
Vertical plane through horizontal angle of 71°

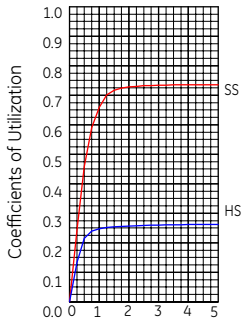

Street Width/Mounting Height

Photometrics

Evolve™ LED Streetlight (ERL1)

ERL1 Asymmetric Short (E3C1)

8,500 Lumens
4000K
ERL1_E3C140

ISO Plot

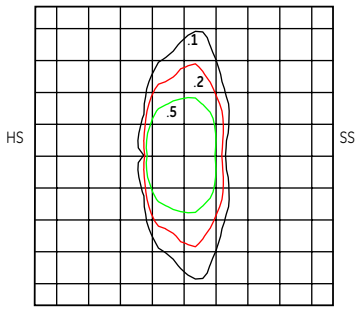

Grid Distance in Units of Mounting Height at 30' Initial Footcandle Values at Grade

Polar Curve

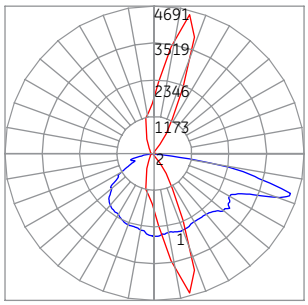

— Vertical plane through horizontal angle of maximum candlepower at 75°
— Vertical plane through horizontal angle of 74°

CU Graph

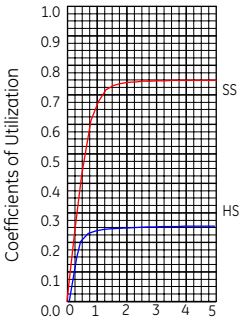

Street Width/Mounting Height

ERL1 Asymmetric Forward (E3D1)

8,400 Lumens
4000K
ERL1_E3D140

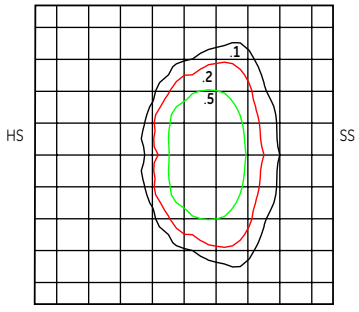

Grid Distance in Units of Mounting Height at 30' Initial Footcandle Values at Grade

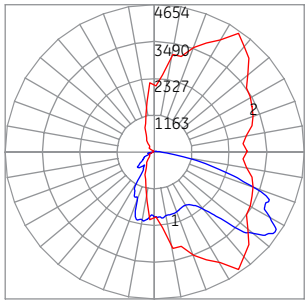

— Vertical plane through horizontal angle of maximum candlepower at 55°
— Vertical plane through horizontal angle of 56°

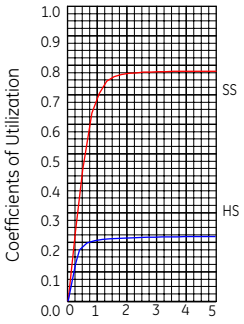

Street Width/Mounting Height

ERL1 Asymmetric Medium (E3E1)

8,500 Lumens
4000K
ERL1_E3E140

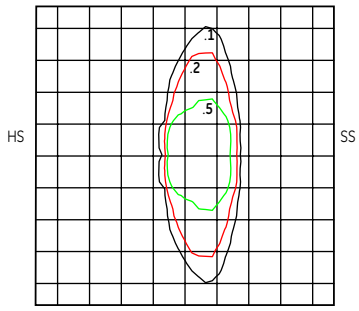

Grid Distance in Units of Mounting Height at 30' Initial Footcandle Values at Grade

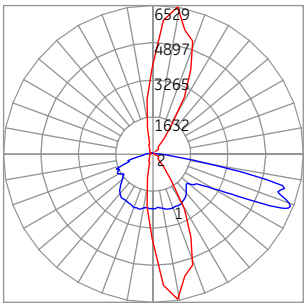

— Vertical plane through horizontal angle of maximum candlepower at 80°
— Vertical plane through horizontal angle of 69°

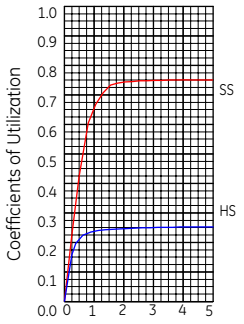

Street Width/Mounting Height

Product Dimensions

Evolve™ LED Streetlight (ERL1)

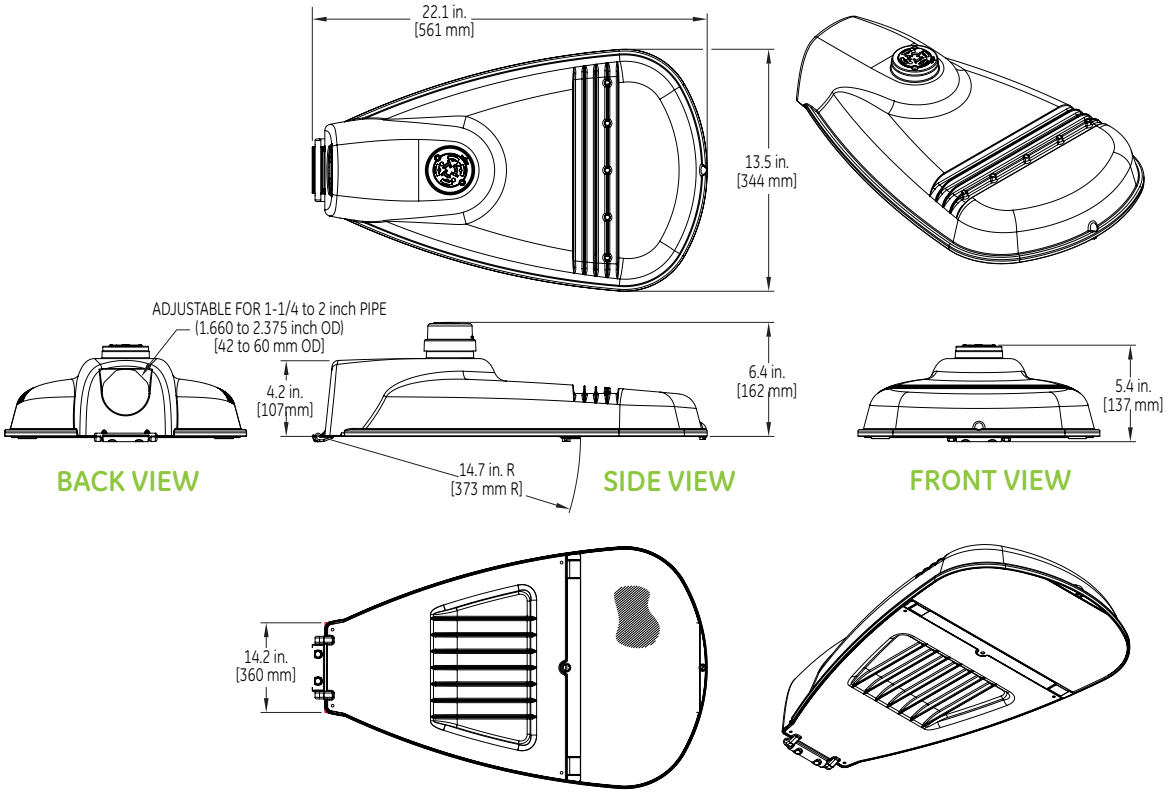

DATA

- Approximate net weight: 15.5 lbs (7.0 kgs)
  Contact manufacturer for specific configuration weight.
- Effective Projected Area (EPA): 0.5 sq ft max (0.046 sq m)

www.gelighting.com

GE and the GE Monogram are trademarks of the General Electric Company. All other trademarks are the property of their respective owners. Information provided is subject to change without notice. All values are design or typical values when measured under laboratory conditions. GE Lighting and GE Lighting Solutions, LLC are businesses of the General Electric Company. © 2015 GE.

OLP3093(Rev 06/29/15)

KEY FEATURES

- Available with multiple distribution patterns
- Hazardous location rated
- Thermally managed for maximum longevity
- Multiple adjustable mounting options
- Triple layer powder coating to weather extreme environments
- Vented enclosure ensures long-term reliability
- 0-10V Dimming 1%-100%

c UL us LISTED
E477827
E477829

MODEL NUMBER SELECTOR

Example: MR6-CW-WF-GY-GN-AC

MODEL	COLOUR	OPTIC	FINISH	LOCATION	POWER
-	-	-	-	-	
MR3 **MR6**	**CW** - Cool White **CS** - Custom**	**2F** - IESNA Type 2 **OF** - Oval 26° x 108° **SF** - Spot 15° **WF** - Wide **CS** - Custom*	**GY** - Grey **CS** - Custom*	**GN** - General Location **HZ** - HazLoc	**AC** - 120-277VAC **HV** - 347VAC

Additional costs and lead times may apply.

***Colour temperatures between 2700-6500K, alternate CRI's and other colours may be available. Additional costs and lead times may apply.*

TECHNICAL SPECIFICATIONS / MAXIMUM RATINGS

HOUSING	Die-cast Aluminium and Polycarbonate Lens
MOUNTING	Surface/Suspended Bracket Included SEE PAGE 3 FOR MOUNTING OPTIONS
VOLTAGE MAXIMUM	**AC**: 277VAC | **HV**: 347VAC
INPUT VOLTAGE	**AC**: 120-277VAC (50/60 Hz) **HV**: 347VAC±10%VAC (50/60 Hz)
POWER (TYP)	**MR3**: 26 W (WF) - 29 W (2F, OF, SF) **MR6**: 51 W (WF) - 57 W (2F, OF, SF)
CURRENT (TYP)	**MR3**: **AC** - 0.25A@120-277 VAC | **HV** - 0.10A@347 VAC **MR6**: **AC** - 0.50A@120-277 VAC | **HV** - 0.20A@347 VAC
CONNECTIONS	3/4" NPT
TEMPERATURE RANGE	-40°C to +55°C (Case ~20°C above ambient)
CERTIFICATIONS	**GN** - Certified to UL 1598 & CSA 22.2 No. 250.0, CSA 22.2 No. 250.13 **HZ** - Certified to UL 844 & CSA 22.2 No. 137 Class I, Division 2, Groups ABCD, T4; Class II, Division 2, Groups FG; Class III, T4; Class I, Zone 2, Groups IIC; Class I, Zone 22
INGRESS PROTECTION	IP66
COLOUR TEMP RANGE	**CW**: 5000K | **CS**: 2700-6500K
CRI VALUE (MIN)	**CW**: 75+
TOTAL LUMENS	SEE CHART ON PAGE 2
LUMEN MAINTENANCE	LM-80 > 100,000 hrs (Based on CREE long term testing)
WEIGHT	4.6 kg | 10.4 lbs

* The ambient temperature during lifetime, lumen and chromaticity determination is 25°C ± 1°C

DIMENSIONS

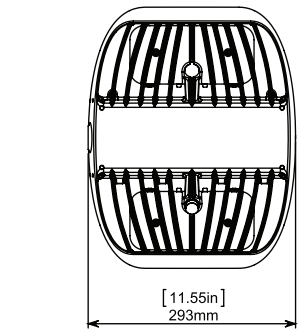

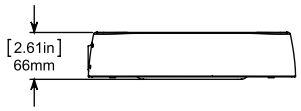

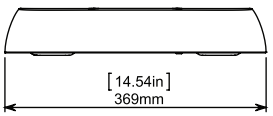

WARRANTY

Five (5) year limited warranty to the original purchaser. The warranty covers defects in materials and workmanship under normal use and service.

For additional information see:
http://www.nemalux.com/company/warranty-policy/

OPTIC OPTIONS

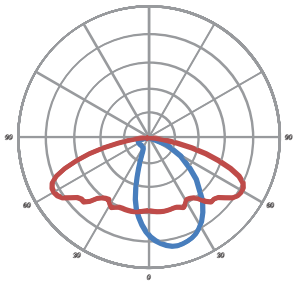

2F - IESNA Type 2

LUMEN OUTPUT (CW)	
MR3	2980
MR6	5520

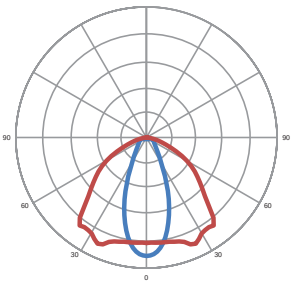

OC - Oval 26° x 108°

LUMEN OUTPUT (CW)	
MR3	3290
MR6	6090

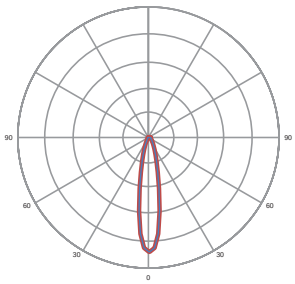

SF- Spot 15°

LUMEN OUTPUT (CW)	
MR3	3380
MR6	6270

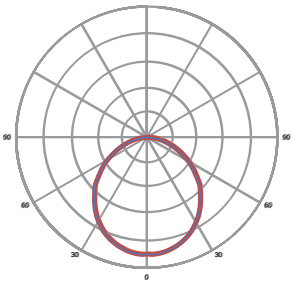

WF - Wide Beam

LUMEN OUTPUT (CW)	
MR3	3050
MR6	5650

*Note: Standard offering above. Up to 20 alternate optical profiles available upon request. Contact Nemalux Sales representative for further details. *Added special order lead times and costs will be incurred**

IES testing by UL

PHOTOMETRICS

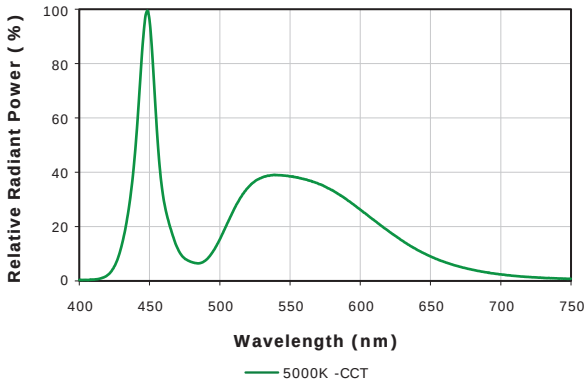

DIMMING

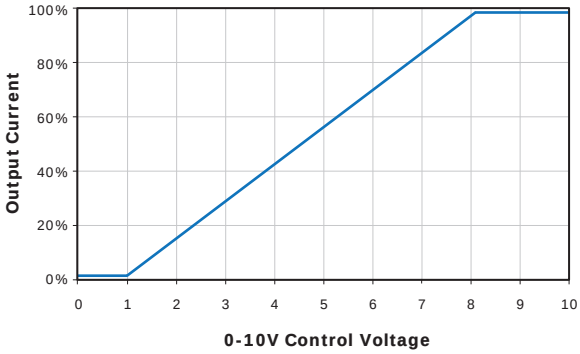

- Driver will source a maximum of 200uA for control needs
- Controller must sink current from the 0-10V control leads

MOUNTING OPTIONS

POLE MOUNT : 5.64 kg | 12.4 lbs

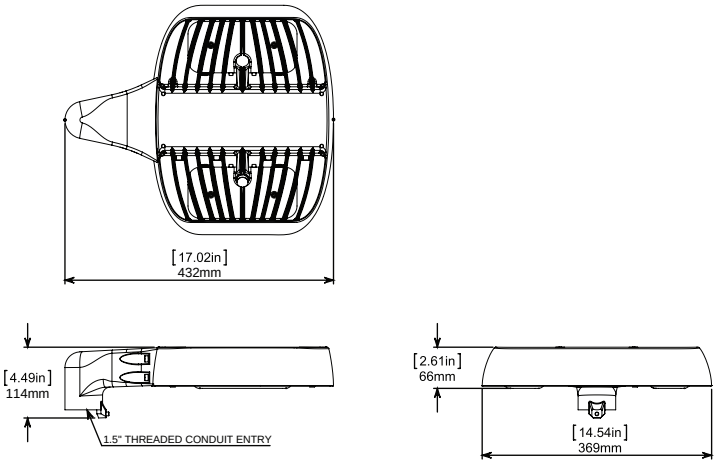

SURFACE MOUNT : 5.3 kg | 11.7 lbs

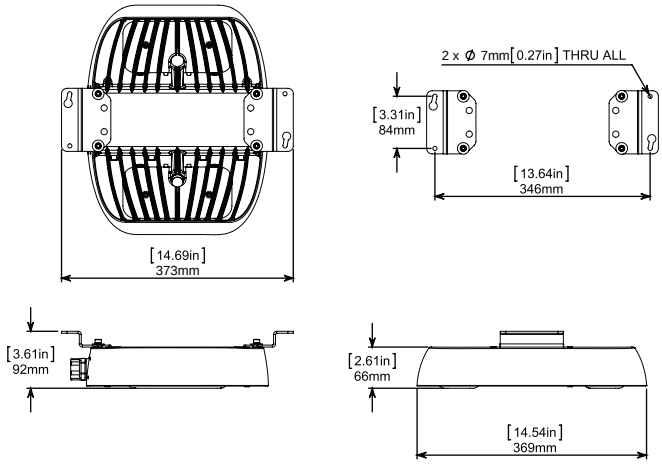

WALL PACK MOUNT : 6.8 kg | 15.0 lbs

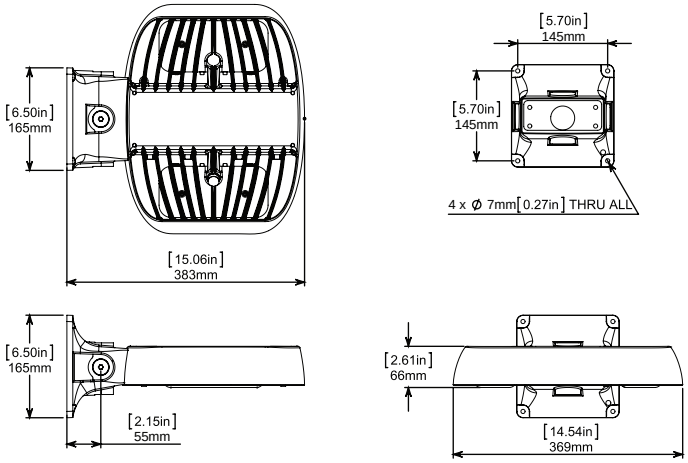

SUSPENDED MOUNT : 5.3 kg | 11.7 lbs

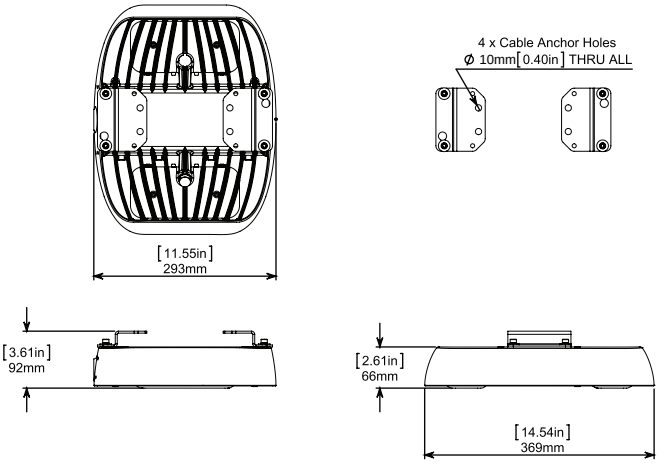

YOKE MOUNT : 6.3kg | 13.9lbs

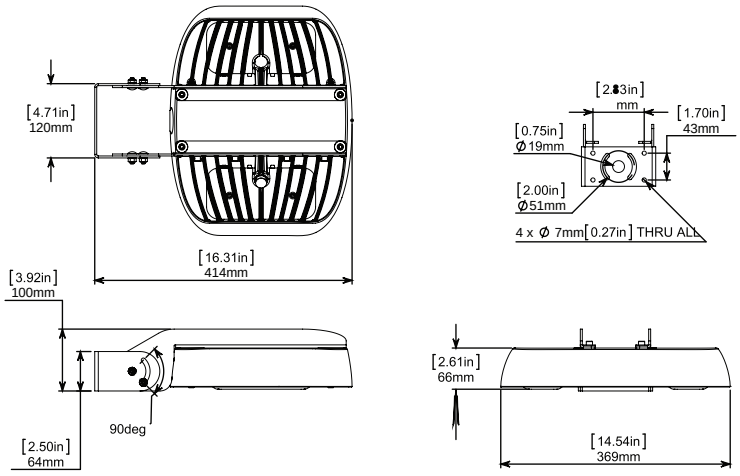

OPTIONAL ACCESSORIES

Example: MR-WM-GY

ACCESSORY	FINISH
-	
MR-WM - Wall Mount* **MR-PM** - Pole Mount* **MR-YM** - Yoke Mount*	**GY** - Grey **CS** - Custom*

**Additional costs and lead times may apply*

70W LED Full Cutoff Wall Pack

■ Product Pictures

- Lumileds LED, high luminous efficiency and long working life.
- High efficiency LED Driver, the wide range input voltage AC100-277V and AC200-480V.
- Cast aluminium cooling design better cooling, light quality, LED Tj < 85℃.
- Excellent Optics design, greatly improved the light utilization and evenness.
- **Photocell Control Available (Option)**

LUMILEDS The Brighter Choice

5 YEAR WARRANTY

DLC QPL LISTED

■ Product Applications

WSD LED FULL CUTOFF WALL PACK Lighting series can be widely used in indoor or outdoor lighting（Wet location）, like mechanical or electronic processing workshops, storage warehouses, steel mills, gas stations, toll booth, waiting rooms, the platforms of railway station , indoor stadiums and flower cultivating tents etc.

■ Structure Features

- **Shell materials: Aluminum & PC .**
- **Finish: Dark Bronze/White**
- **Net weight**：3.00kgs （6.61 lbs） Unit：inch(mm)

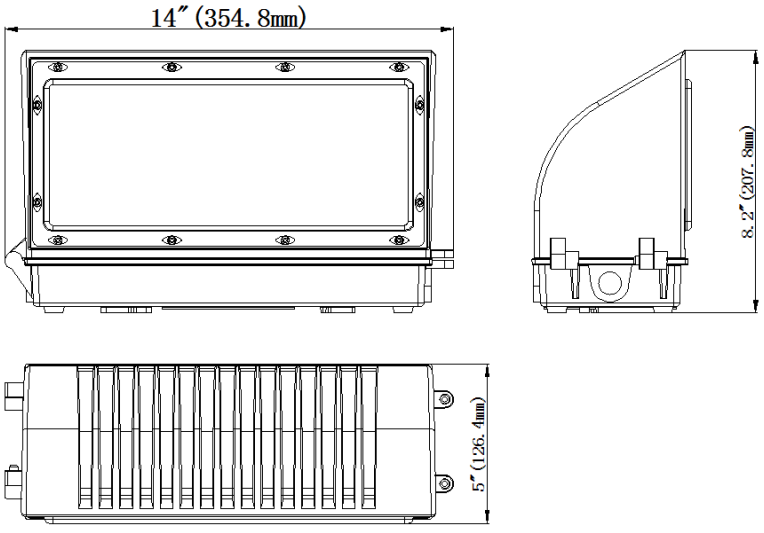

■ Technical Parameters

Type	WSD-FWP07W27-XXK-Z-Y		
Power	70W	**Lighting Angle**	60*90°
Input Voltage	AC100-277V	**LED Brightness Decay**	<5%/6000 hrs
PF	>0.95	**Working Life**	>50000 hrs
Driver Efficiency	>90%	**Working Temperature**	-30 - +45℃
Luminous Flux	7200 Lm	**Storage Temperature**	-40 -+80℃
Color Temperature	3000K/4000K/5000K/6500K	**Protection Level**	Wet Location/IP65
CRI	Ra>80	**Cable**	Input Connect, No cable

Remark: **"Z" may be D or W represented color,**

"Y" may be "P12", "P27" or blank represented type of photoelectric Switches.

■ Light Distribution Curve (Clear Lens)

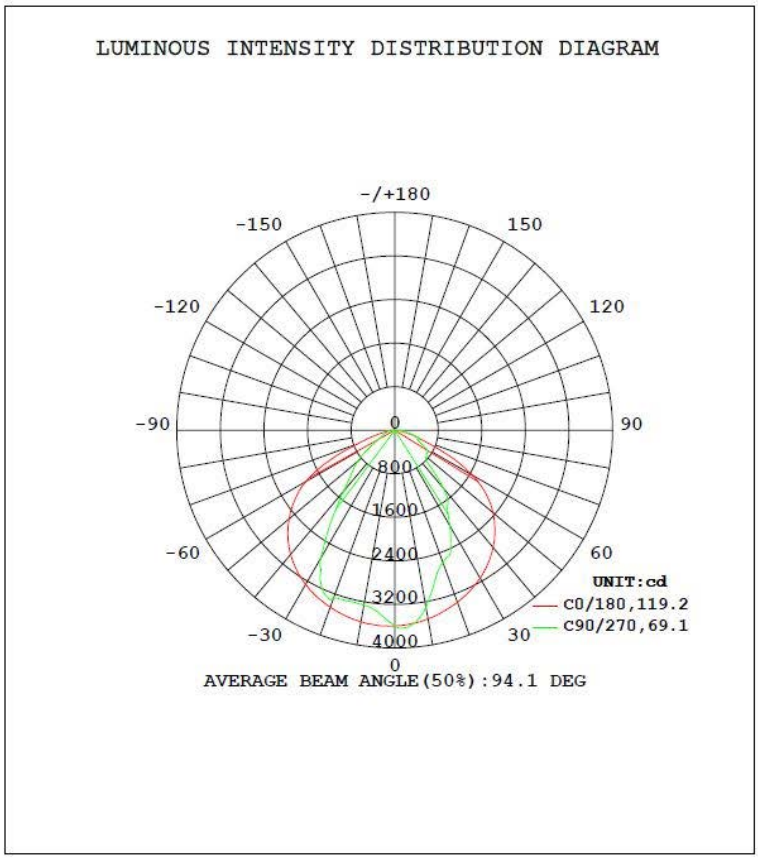

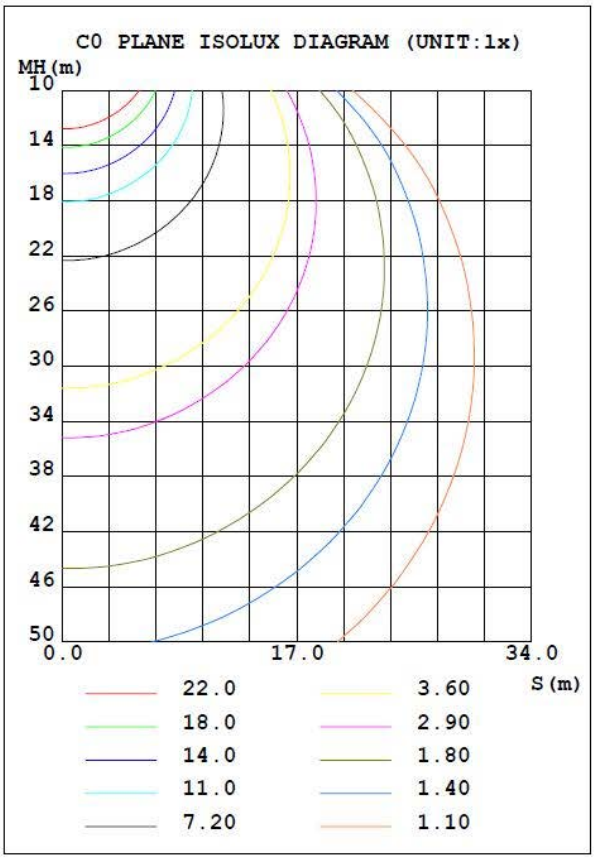

■ ORDERING INFORMATION:

EXAMPLE: WSD-FWP 07W 27-50K-D-P12

WSD	FWP	45W	27	50K	D	P12
Company	**Product**	**Power**	**Voltage**	**Color Temp**	**Finish**	**Control**
WISDOM	**FWP** Full Cutoff Wall Pack	**45W**(45W) **07W**(70W)	**27** AC100-277V **48** AC200-480V	**30K** (3000K) **40K** (4000K) **50K** (5000K) **65K** (6500K) ± **500K**	**D** Dark Bronze **W** White	**P12** 120V Photocell **P27** 277V Photocell

■ Product Certifications

■ Contact Us:

WISDOM OPTOELECTRONICS TECHNOLOGY CO.,LIMITED

Tel: +86 755 2744 8585 +86 755 2744 8884 **Fax:** +86 755 2744 8089
Email: leo.zhu@wisdom-ssl.com **Website:** www.wisdom-ssl.com
Add: FLOOR 8,BUILDING B2 SUNSHINE INDUSTRIAL PARK HEZHOU XIXIANG BAOAN DISTRICT SHENZHEN, GUANGDONG , CHINA, 518126,

Nemalux LED Lighting™

RSLED
rev. 08-2015

#252380
IECEx/CSA/14.0025x

KEY FEATURES

- Available with 19° (spot), 25° (narrow), 40° (medium), 125° (wide/frosted), NEMA 6x3 or Forward Kick optics
- Hazardous location rated
- Thermally managed for maximum longevity
- Multiple adjustable mounting options
- Efficiency up to 90 Lumen per Watt

MODEL NUMBER SELECTOR

Example: RSLED-CW-WF-GRY-GEN-WAL-VAC

MODEL	COLOUR	OPTIC	FINISH	LOCATION	MOUNT	POWER
RSLED						
	CW- Cool White **WW-** Warm White	**S** -Spot 19° **N** -Narrow 25° **M** -Medium 40° **W** -Wide 125° **WF** -Wide Frosted125° **FK** -Forward Kick **6X3** -Nema Type 6x3	**GRY-**Grey **CUS** -Custom * **Additional costs apply*	**GEN-** General **C1D2-** Class 1, Div 2	**POL** - Pole Mount **WAL** - Wall Mount **HBY** - High Bay	**VAC** - 90-277VAC **HDC** - 130-420 VDC **347** - 347-477VAC

TECHNICAL SPECIFICATIONS / MAXIMUM RATINGS

HOUSING	Die-cast Aluminium and Machined Aluminum
MOUNTING	Mounting Brackets (Other Options Available See Pg2)
VOLTAGE MAXIMUM	VAC: *277 VAC* | HDC: *420 VDC* | 347: *477 VAC*
INPUT VOLTAGE	VAC: *90-277 VAC* | HDC: *130-420 VDC* | 347: *347-477 VAC*
POWER (TYP)	VAC: 235W | HDC: 235W | 347: 312W
POWER (MAX)	VAC: *270W* | HDC: *270W* | 347: *360W*
CURRENT (MAX)	2.3A@115 VAC | 1.0A@277 VAC | 1.0A@347 VAC
CONNECTIONS	3/4" NPT x5
TEMPERATURE RANGE	-40° C to +50° C
TYPICAL CASE TEMPERATURE	~40° C Above Ambient Temperature
CERTIFICATIONS	cCSAus: Class I, Division 2, Groups ABCD; Class II, Division 1 and 2, Groups EFG; Class III; T4; Canada: Zone 2, Ex nA IIC, T4; Zone 20; USA: Class I, Zone 2, AEx nA IIC, T4; Zone 20: IECEx: Group II: Ex nA IIC T4 or 133.5°C Gc Group III: Ex tb IIIC T95°C Db
INGRESS PROTECTION	IP65
COLOUR TEMP RANGE	CW: 5000K | WW: 3500K
CRI VALUE (TYP)	CW: 70Min | WW: 80Min
TOTAL LUMENS	VAC/HDC - S: 20556 | M: 20395 | WF: 21713 | FK: 19084 347 - S: 22406 | M: 22231 | WF: 21713 | FK: 20802
LUMEN MAINTENANCE	LM-80 > 100,000 hrs (Based on CREE long term testing)
WEIGHT	16.3 kg | 36 lbs

* The ambient temperature during lifetime, lumen and chromaticity determination is 25° C ± 1° C

DIMENSIONS

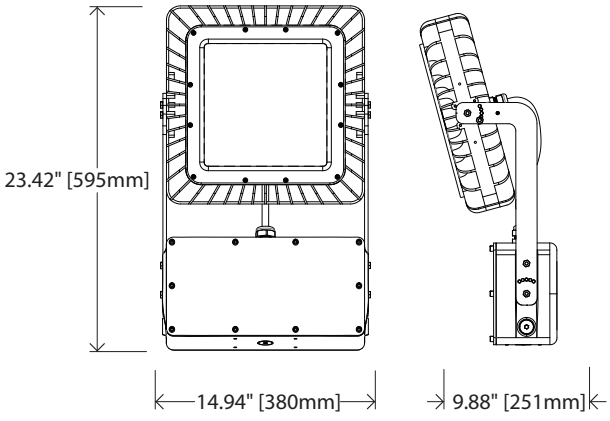

WARRANTY

Five (5) year limited warranty to the original purchaser. The warranty covers defects in materials and workmanship under normal use and service.

For additional information see:
http://www.nemalux.com/company/warranty-policy/

MADE IN CANADA
www.nemalux.com | sales@nemalux.com | Tel 403•242•7475 | Fax 403•243•6190

PHOTOMETRICS

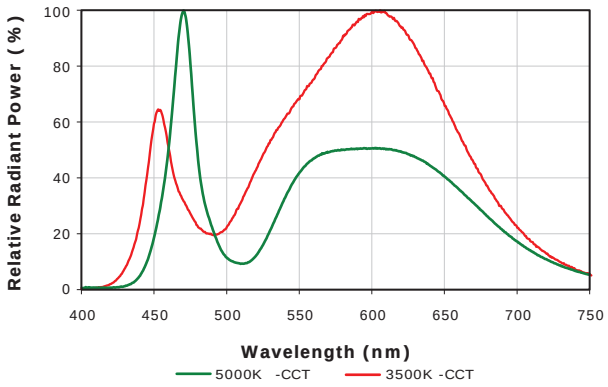

OPTIC OPTIONS

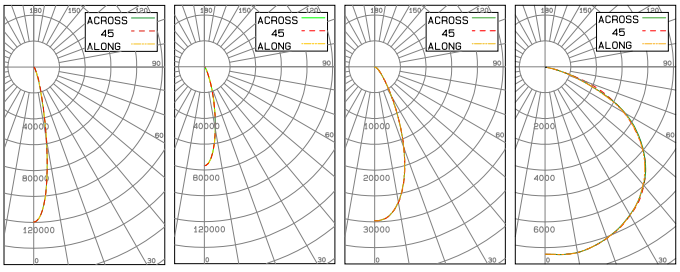

SPOT -19° | NARROW - 25° | MEDIUM - 40° | WIDE - 125°

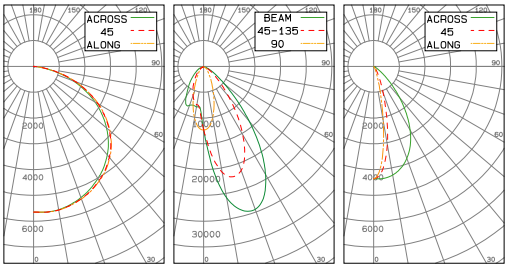

WIDE FROSTED | FORWARD KICK | NEMA 6x3

MOUNTING OPTIONS

HIGH BAY

High/Low Bay mounting:
- Suspended by Chain
  (Hook available upon request)
- Direct Conduit
- Surface mounted with wall bracket (Shown)

Safety Chain Plate provided with each HBY Fixture

POLE MOUNT

2-3/8" Standard Tenon

SURFACE MOUNT

ADJUSTABLE BRACKETS

Pole and Surface Mount can mount to the bottom and back of the junction box.

Eleven mounting angles in 15° increments.

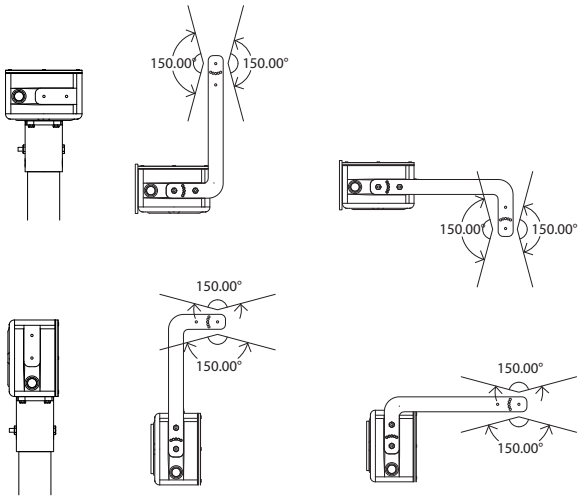

CUSTOM FINISHES

Powder Coated Aluminum

Black | White | Brown

Please contact for further options

MADE IN CANADA

www.nemalux.com | sales@nemalux.com | Tel 403•242•7475 | Fax 403•243•6190

Champ® FMV nR Floodlights

Cl. I, Div. 2, Groups A, B, C, D
Cl. I, Zone 2, AEx nR II
Cl. II, Div. 1, Groups F, G
(up to 250W)

Marine locations
NEMA Type 4X and IP66
Wet locations

The Champ FMV nR Series Floodlight offers exceptional illumination in industrial areas, both indoors and out. And, it comes standard as a restricted breathing luminaire. The Champ FMV nR Series Floodlight is easily adjusted to aim light where it's needed and is available in a wide variety of energy-saving mogul base HID light sources and wattages including:

- 150–400W High Pressure Sodium
- 175–400W Metal Halide

Applications:

The FMV is made with heavy-duty, die-cast aluminum components and stainless steel hardware. It offers superior corrosion resistance to ensure longer life, which makes the FMV floodlight the ideal choice for a wide variety of industrial applications, including wet and marine environments.

Features and Benefits:

- AEx nR, Ex nR restricted breathing rating is standard—a hazardous location luminaire without additional accessories or options; restricted breathing offers cooler T-numbers for increased hazardous locations suitability
- NEMA 7x6 butterfly beam floodlight pattern—wide, uniform and far reaching to provide excellent efficiency and more light where you need it
- NEMA Type 4X and IP66 construction is designed for use indoors and outdoors in marine and wet locations—with stainless steel external hardware suitable for saltwater and corrosive applications
- Easy wiring—standard terminal block with marked terminals saves time and eliminates wiring errors
- Vapor-tight sealing cable connector—standard
- Will accommodate existing mounting hardware—SFA6 slipfitter for pole and SWB6 wall mount
- Optional metric machining will accept M20 or M25 (must be specified on order)
- 40°C, 55°C and 65°C ambient suitability—addresses high ambients common at industrial facilities
- Low ambient capability to -40°C—perfect for colder climates
- Heavy-duty, die-cast copper-free aluminum enclosure with epoxy coating and stainless steel hardware—provides a robust design with industrial grade construction and corrosion resistance
- Hinged door frame assembly—has captive cover screws for ease of relamping
- Yoke mount design—standard construction provides the greatest mounting flexibility, can be mounted vertically (wall), horizontally (rooftop or floor), or any angle in between
- 3-axis resonance withstand and UL844 vibration compliant—can stand up to the tough jobs
- Precision formed aluminum reflector—superior beam control, distribution and efficiency
- Multi-tap ballasts—offering a choice of 120, 208, 240 and 277V; 220V 50Hz, 240V 50Hz, Tri-Tap (120, 277 and 347), and 480V ballasts are also available
- High light output with a low cost of operation—cost-effectiveness in a high wattage floodlight
- For use with SFA6 Slipfitter Adapter and SWB6 Wall Mount Bracket accessories—further enhances mounting flexibility

Certifications & Compliances:

NEC/CEC (NEC Ballast Gear and Socket):

- Class I, Division 2, Groups A, B, C, D
- Class I, Zone 2, AEx nR II
- Class II, Division 1, Groups F, G (up to 250W)
- Marine locations
- NEMA Type 4X and IP66
- Wet locations

IEC (IEC Ballast Gear and Socket):

- IEC Zone 2, Ex nR II (pending)

UL/cUL Standards:

- 844—Hazardous (Divisions Classified) Locations
- 60079-15
- 1598—Luminaires
- 1598A—Supplemental Requirements for Luminaires for Installation on Marine Vessels

IEC Standards:

- 60079-15

Standard Materials:

- Fixture housing and door frame assembly—die-cast aluminum
- External hardware—stainless steel
- Lens—heat- and impact-resistant tempered glass
- Yoke—aluminum

Standard Finishes:

- Enclosure and yoke—Corro-Free™ epoxy powder coat
- Stainless steel—natural

The only full frame trunnion mount floodlight with a T3 rating and a removable ballast tray assembly.

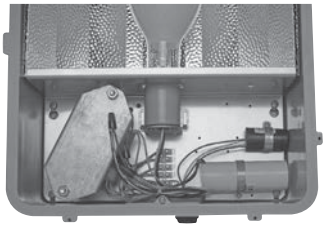

Industry Best for Ease of Installation:

1. Removable ballast tray
2. Prewired to terminal blocks
3. Substantial room for wiring

Ratings (Electrical/Size):

Sources/Wattages (Mogul Base Lamps)

- HPS—150, 250, and 400W
- MH—175, 250, and 400W

Voltages

Standard Voltage Ballasts

- Multi-tap (120, 208, 240, and 277V 60Hz)
- Dual-tap (120 and 277V)
- 480V 60Hz
- Tri-tap (120, 277, 347V 60Hz)

Optional Voltage Ballasts

- 220V or 240V 50Hz (for export)
- 220V 60Hz (for export)

Isolated Ballasts

- 208, 240, or 480V (for Canada)

Hub Size

- Standard—3/4" NPT
- Optional—25 mm (M25 x 1.5) or 20 mm (M20 x 1.5)

 Copyright© 2013 Eaton's Crouse-Hinds Business

Champ® FMV nR Floodlights

Cl. I, Div. 2, Groups A, B, C, D
Cl. I, Zone 2, AEx nR II

Marine locations
NEMA Type 4X and IP66
Wet locations

Ordering Information for Floodlight with NEC Ballast:

Lamp Type	Watts	Yoke Mount 3/4" NPT Hub
High Pressure Sodium	150	**FMVSY150/MT 76**
	250	**FMVSY250/MT 76**
	400	**FMVSY400/MT 76**
Metal Halide	175	**FMVMY175/MT 76**
	250	**FMVMY250/MT 76**
	400	**FMVMY400/MT 76**

Voltage Suffixes†

Voltage (60Hz)	Dual-Tap	Tri-Tap	Multi-Tap	480
Suffix	/DT	/TT	/MT	/480

To complete catalog number, add voltage and options suffix(es).

Options

Example: FMVMY400/MT 76 M25 V2PC20

Series | Yoke | Voltage | Metric Entry
Lamp Type | Watt | Beam Spread | Photocell

†150W HPS fixtures are furnished with ANSI spec/S55 ballasts for 55V lamps. For 100V lamps, add suffix "CE" after voltage suffix. Example: FMVSY150/MT CE 76.

Options:

Description	Suffix
Instant Restrike and Ballast Guard	
Instant restrike—enables a hot HPS lamp to immediately restrike after a momentary loss of arc due to voltage fluctuation or power outage	
Ballast guard starter cut out switch—prevents starter pulsing when lamp is cycling or inoperative; prolongs ballast and ignitor life.	
• 150W LX HPS only	**TIR**
Factory assembled with HID lamp installed	**FA**
Fused (not suitable for marine applications)	**S658**
20mm metric thread for conduit opening	**M20**
25mm metric thread for conduit opening	**M25**
3/4" NPT hub conduit opening	**NPT75**
Furnished with lamps (not installed)	**S714**
Retention chain	**S831**
Pulse-Start Metal Halide	**S828**
Enclosure machined for 2 conduit/cable entries	**S886**

Options for Photocell*:

Description	Suffix
Photocell 120V, 50/60Hz installed	**V2PC20**
Photocell 208-240V, 50/60Hz installed	**V2PC22**
Photocell 277V, 50/60Hz installed	**V2PC27**

*Photocell for Div. 2 installation only.

Accessories (Order Separately):

Slipfitter Adapter
To be mounted to yoke mount fixture
Fits onto 2" pipe/conduit **SFA6**

Wall Bracket
Use with slipfitter adapter SFA6 for easy wall mounting and increased adjustability **SWB6**

Photometric Data:

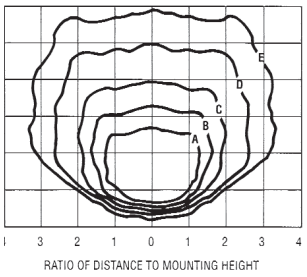

Isofootcandle Chart FMV
400W High Pressure Sodium (HPS)
Catalog Number: FMVSY400-76
Lamp: 400W Clear HPS
Lumen Rating: 50,000
For 150W HPS, multiply footcandles by .32.
For 250W HPS, multiply footcandles by 0.6.
Fixture located at 0°, 0° aiming angle at 45°

(Note: See Figures 1 and 2).

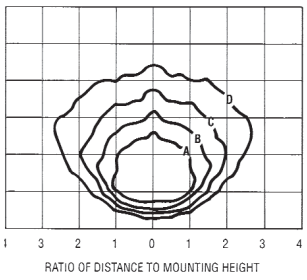

Isofootcandle Chart FMV
400W Metal Halide (MH)
Catalog Number: FMVMY400-76
Lamp: 400W Clear MH
Lumen Rating: 34,000
For 250W MH, multiply footcandles by 0.6.
Fixture located a 0°, 0° aiming angle 45°

(Note: See Figures 1 and 2).

Effective Projected Area (EPA):

- For windloading
- For proper pole selection

Aiming Angle	EPA
0°	2.9 FT^2
30°	2.5 FT^2
45°	2.1 FT^2

Footcandle Table:

Mounting Height	Footcandle Values for Isofotcandle Lines				
	A	B	C	D	E
15'	8.0	4.0	2.0	0.80	0.40
20'	4.5	2.3	1.1	0.50	0.23
25'	2.9	1.4	0.7	0.30	0.14
30'	2.0	1.0	0.5	0.20	0.10
35'	1.5	0.7	0.4	0.15	0.07
40'	1.1	0.6	0.3	0.11	0.06

1136 www.crouse-hinds.com US: 1-866-764-5454 CAN: 1-800-265-0502 Copyright© 2013 Eaton's Crouse-Hinds Business

Weights and Dimensions:

Net Fixture Weights (Lbs.):

Fixtures	FMVS	FMVM
150W	37	37
175–250W	40	42
400W	44	44

SFA6 (Slipfitter Adapter)—Add 4 lbs., SWB6 (Wall Bracket)—Add 6 lbs.

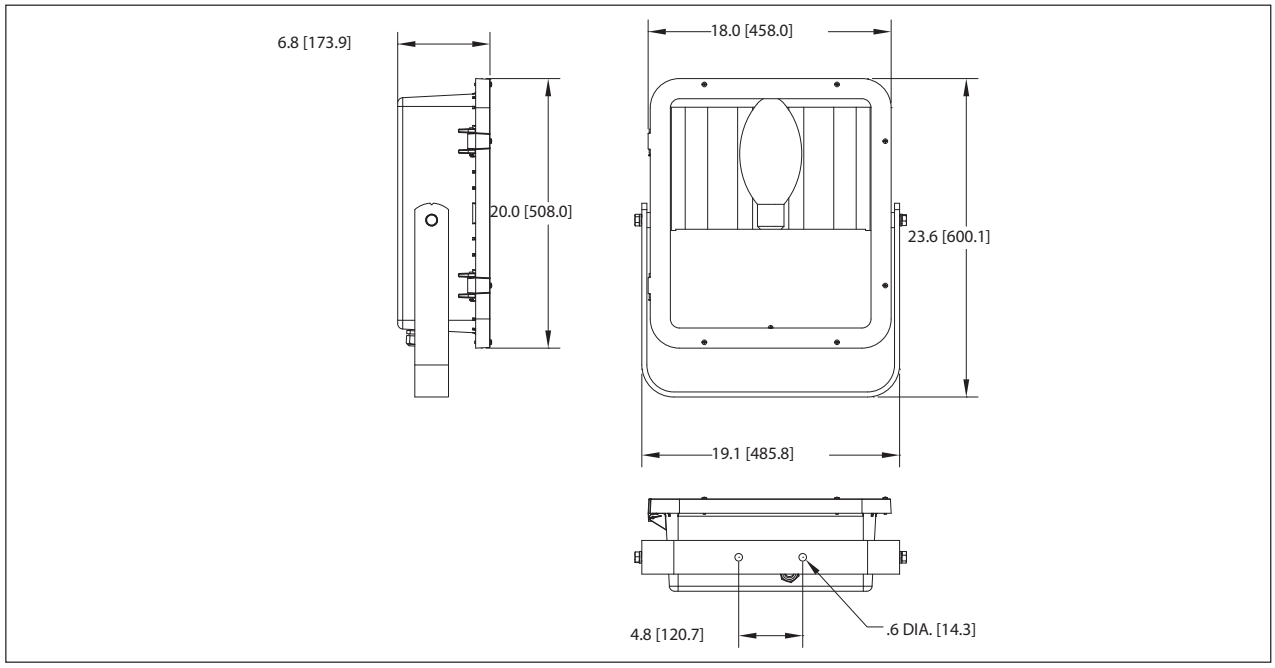

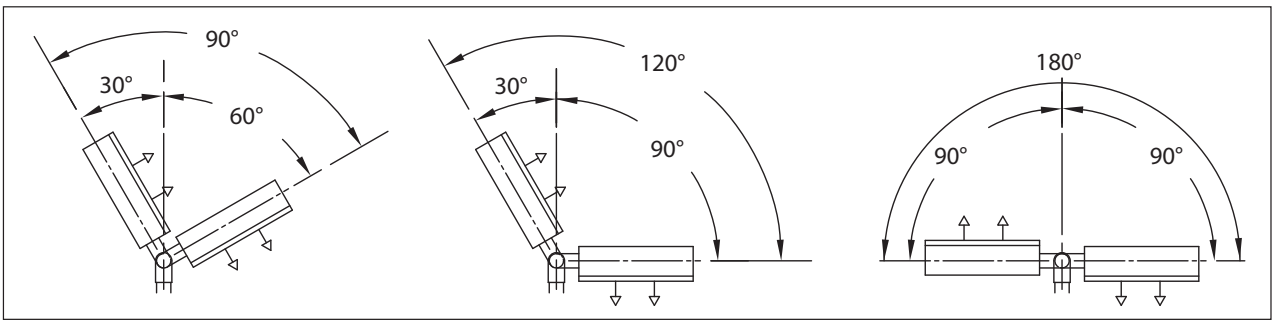

FIGURE 1 **FIGURE 2** **FIGURE 3**

 Copyright© 2013 Eaton's Crouse-Hinds Business

Champ® FMV nR Floodlights

Cl. I, Div. 2, Groups A,B,C,D
Cl. I, Zone 2, AEx nR II

Marine locations
NEMA Type 4X and IP66
Wet locations

Temperature Performance Data:

	Lamp		40°C Ambient Temperature Code			55°C Ambient Temperature Code			65°C Ambient Temperature Code			Fixture Aiming	
Catalog Series	Type	Watts	Class I, Zone 2	Class I, Div. 2	Supply Wire °C	Class I, Zone 2	Class I, Div. 2	Supply Wire °C	Class I, Zone 2	Class I, Div. 2	Supply Wire °C	Range	Figure
FMVS	High Pressure Sodium	150	T4	325	90	T4	325	90	T3	325	105	90°	1
			T4	325	90	T3	325	105	T3	325	105	120°	2
			T3	325	90	T3	325	105	T3	325	105	180°	3
		250	T4	325	90	T4	325	90	T3	325	105	90°	1
			T4	325	90	T3	325	105	T3	325	105	120°	2
			T3	325	90	T3	325	105	T3	325	105	180°	3
		400**	T3	T1	90	T3	T1	105	–	–	–	90°	1
			T3	T1	105	T3	T1	125	–	–	–	120°	2
			T3	T1	105	T3	T1	125	–	–	–	180°	3
FMVM	Metal Halide	175	T4	325	90	T4	325	90	T3	325	105	90°	1
			T4	325	90	T4	325	105	T3	325	105	120°	2
			T3	350	90	T3	350	125	T3	T1	105	180°	3
		250*	T4	325	90	T4	325	90	T3	325	105	90°	1
			T4	325	90	T4	325	105	T3	325	105	120°	2
			T3	350	90	T3	350	125	T3	T1	105	180°	3
		400**	T3	325	90	T3	325	105	–	–	–	90°	1
			T3	325	105	T3	325	125	–	–	–	120°	2
			T3	T1	105	T2	T1	125	–	–	–	180°	3
	Pulse-Start Metal Halide	175	T4	325	90	T3	325	105	T3	325	105	90°	1
			T4	325	90	T3	325	105	T3	325	105	120°	2
			T3	350	90	T3	T1	105	T3	T1	105	180°	3
		250*	T4	325	90	T3	325	105	T3	325	105	90°	1
			T4	325	90	T3	325	105	T3	325	105	120°	2
			T3	350	90	T3	T1	105	T3	T1	105	180°	3
		320**	T3	350	105	T3	350	105	–	–	–	90°	1
		350**	T3	350	105	T3	T1	125	–	–	–	120°	2
		400**	T3	T1	105	T3	T1	125	–	–	–	180°	3

*Suitable for use in 65°C ambient without optional fuses.
**Suitable for use in 55°C ambient without optional fuses.

Lamp Selection (Mogul Base):

Fixture	Watts Type	Bulb	G.E.	Osram	Philips
FMVSY150	150 HPS	ED23 ½ BT25	LU150/55	LU150/55	C150S55
FMVSY250	250 HPS	ED18 ½ or ET18	LU250	LU250	C250S50
FMVSY400	400 HPS	ED18 or BT37	LU400	LU400	C400S51
FMVMY175	175 MH	ED28 or BT28	MVR175/U	M175/U	MH175/U
FMVMY250	250 MH	ED28 or BT28	MVR250/U	M250/U	MH250/U
FMVMY400	400 MH	ED37 or BT37	MVR400/U	M400/U	MH400/U

Photometrics are available online.

 Copyright© 2015 Eaton's Crouse-Hinds Business

VMV Series 50–175W

Champ® H.I.D. Luminaires

Cl. I, Div. 2, Groups A, B, C, D
Restricted Breathing Cl. I,
Div. 2 & Zone 2 (Suffix S826)
Cl. II, Groups E, F, G, Cl. III &
Simultaneous Presence
(HPS 50W, 70W)

Marine & Wet Locations
3, 3R, 4, 4X; IP56 to IP66

Applications:

VMV series *Champ* luminaires are used:

- In manufacturing plants, refineries, chemical, petrochemical, and other industrial process facilities, waste or sewage treatment facilities, offshore, dockside, and harbor installations, and other heavy industrial applications
- In areas in which ignitible concentrations of flammable gases or vapors will be present only due to abnormal, unusual, or accidental conditions
- Where combustible dusts are present
- In marine applications where water spray and corrosive atmospheres are considerations
- In elevated ambient temperatures often found in industrial applications
- In installations where moisture, dirt, dust, vibration, corrosion, and rough usage are problems
- Wherever the damaging effects of water, wind, snow, sleet, hot sun, or any combination of these elements are found

Features:

- Compact, lightweight design is ideal for medium and low mounting heights
- Cast copper-free aluminum construction (less than 0.4 of 1% copper) and epoxy powder finish provide excellent resistance to corrosion
- Seven mounting arrangements to suit any lighting layout – pendant, flexible pendant, ceiling, wall bracket, angle stanchion, straight stanchion, and quad-mount
- Wide range of light sources and wattages to meet specifiers' needs: 50, 70, 100, and 150 watt high pressure sodium (HPS); 70, 100, 175 watt metal halide (MH and Pulse Start MH)
- Hinged ballast housing for ease of installation and maintenance
- Wide choice of photometric distributions. Glass globes, refractors and compact refractors available for all wattage luminaires; plastic refractors (for non-hazardous applications only) for 50–100 watt luminaires
- All luminaires are designed to perform in a 40°C ambient temperature. Selected luminaires are suitable for ambient temperatures up to 65°C
- Superior gasketing seals between the mounting module, housing, and optical assembly for optimum performance in wet and corrosive environments
- Hubs with an integral conduit stop and bushing to help prevent damage to field wiring during installation
- Low ambient capability to (–40°C)
- Dome and 30° angle reflectors made of bright white *Krydon*® material provide superior reflectivity, with twist-on feature requiring no tools or additional hardware. Will not chip, peel, dent, rust, or corrode
- Grounding wire for safety
- High power factor ballasts (Min P.F. 90%) and available in a variety of voltages to meet local area requirements
- Mogul base porcelain lamp socket

Certifications and Compliances:

- NEC & CEC:
  Class I, Division 2, Groups A, B, C, D
  HPS 50W, 70W – Class II, Class III & Simultaneous Presence (Class I, Division 2 and Class II)
  Class I, Zone 2
- UL Standards:
  844 Hazardous (Classified) Locations
  1598 Luminaires
  1598A Marine Locations
- CSA Standards:
  C22.2 No. 137
- IEC Standards:
  60079-15

Standard Materials:

- Ballast housings and mountings – copper-free aluminum (less than 0.4 of 1%)
- Exterior hardware – stainless steel
- Reflectors (dome and angle) – *Krydon* fiberglass-reinforced polyester material
- Globes – heat and impact resistant internally fluted glass
- Refractors – glass (50–175 watts); plastic 50–100 watts), for non-hazardous applications
- Guards: Globe – copper-free aluminum
  Refractor – stainless steel

Standard Finishes:

- Copper-free aluminum – epoxy powder coat
- *Krydon* material – high reflectance white
- Stainless steel – natural

Electrical Ratings:

- 120, 208, 240, 277, 347, 480, 600, Multi-tap (120, 208, 240 and 277)
- 50 to 150W HPS; 70 to 175W MH

Options:

The following special options are available from the factory by adding suffix to luminaire Cat. No.:

Description	Suffix
Factory Sealed Champs Class I, Division 2 & Zone 2 Provides T3 code without conduit or cable seals Restricted breathing/Non-sparking	**S865**
Restricted Breathing Construction Class I, Division 2 & Zone 2 Suitabilty Cooler Operating Temperatures (T-Numbers)	**S826**
Terminal block Furnished with terminal block, crimp terminals and dedicated voltage ballasts (no MT, DT or TT)	**S826TB**
Fused – to protect ballast and capacitors against abnormal line conditions (Not available with /MT Ballast) (Not for use in Canada) (Not suitable for marine applications)	**S658***
Quick-Clip - Holds weight of housing when closed. No need to support luminaire while screwing the housing to the cover	**S890**
Ballast-Gard™ starter cut-out switch – prevents starter pulsing when lamp is cycling or inoperative; prolongs ballast and ignitor life. Available for use with 50–150W LX HPS only	**BG**
Instant restrike – enables a hot HPS lamp to immediately restrike after a momentary loss arc due to voltage fluctuation or power outage. It has no effect on the warm-up period of cold lamps. 50–150W LX HPS only	**IR**
Quartz auxiliary lighting – comes to full brightness immediately and remains lit until the HID lamp attains 60–70% of full illumination. For non-hazardous locations only. Must use R2, R3 and R5 refractors.	**QTZ**
Refractor Mount - For ballast housing only. Used with R2, R3 and R5 refractors.	**RM**
Stainless steel insert – top hat with stainless steel threaded insert to attach ballast housing	**S806**
TEFLON coating on globe for increased shatter protection G24 only. T-Numbers not affected	**S808**
Factory assembled with H.I.D. lamps installed for additional labor savings	**FA**

Note: BG and IR options cannot be used together. IR and QTZ options cannot be used together.

Accessories:

- See pages 1022–1023 for complete listing.

TEFLON is a registered trademark of E.I. duPont Co.

*When ordering fuses for luminaires, option S658, you must specify the operating voltage. S658 cannot be ordered with /MT in the catalog number.

 Copyright© 2015 Eaton's Crouse-Hinds Business

Crouse-Hinds by EATON

VMV Series 50–150W High Pressure Sodium

Champ® H.I.D. Luminaires

Cl. I, Div. 2, Groups A, B, C, D
Restricted Breathing Cl. I,
Div. 2 & Zone 2 (Suffix S826)
Cl. II, Groups E, F, G, Cl. III &
Simultaneous Presence
(50W, 70W)

Marine & Wet Locations
3, 3R, 4, 4X; IP66

To complete the catalog #, include information in notes 1, 2 and 3 below. For guards and other optics see VMV Series - Ordering By Components page.

	Mounting Style	Hub Size	Lamp Watts	BASIC CATALOG NUMBER With G24 Globe and P21 Guard	With G241 Type I Compact Refractor *	With R5 Glass Refractor †
	Pendant Mount	¾	50	**VMVS2A050GP**	**VMVS2A050G241**	**VMVS2A050R5**
		1		**VMVS3A050GP**	**VMVS3A050G241**	**VMVS3A050R5**
		¾	70	**VMVS2A070GP**	**VMVS2A070G241**	**VMVS2A070R5**
		1		**VMVS3A070GP**	**VMVS3A070G241**	**VMVS3A070R5**
		¾	100	**VMVS2A100GP**	**VMVS2A100G241**	**VMVS2A100R5**
		1		**VMVS3A100GP**	**VMVS3A100G241**	**VMVS3A100R5**
		¾	150	**VMVS2A150GP**	**VMVS2A150G241**	**VMVS2A150R5**
		1		**VMVS3A150GP**	**VMVS3A150G241**	**VMVS3A150R5**
	Flexible Pendant Mount	¾	50	**VMVS2HA050GP**	**VMVS2HA050G241**	**VMVS2HA050R5**
		¾	70	**VMVS2HA070GP**	**VMVS2HA070G241**	**VMVS2HA070R5**
		¾	100	**VMVS2HA100GP**	**VMVS2HA100G241**	**VMVS2HA100R5**
		¾	150	**VMVS2HA150GP**	**VMVS2HA150G241**	**VMVS2HA150R5**
	Ceiling Mount Thru-Feed	¾	50	**VMVS2C050GP**	**VMVS2C050G241**	**VMVS2C050R5**
		1		**VMVS3C050GP**	**VMVS3C050G241**	**VMVS3C050R5**
		¾	70	**VMVS2C070GP**	**VMVS2C070G241**	**VMVS2C070R5**
		1		**VMVS3C070GP**	**VMVS3C070G241**	**VMVS3C070R5**
		¾	100	**VMVS2C100GP**	**VMVS2C100G241**	**VMVS2C100R5**
		1		**VMVS3C100GP**	**VMVS3C100G241**	**VMVS3C100R5**
		¾	150	**VMVS2C150GP**	**VMVS2C150G241**	**VMVS2C150R5**
		1		**VMVS3C150GP**	**VMVS3C150G241**	**VMVS3C150R5**
	Wall Mount Thru-Feed	¾	50	**VMVS2TW050GP**	**VMVS2TW050G241**	**VMVS2TW050R5**
		1		**VMVS3TW050GP**	**VMVS3TW050G241**	**VMVS3TW050R5**
		¾	70	**VMVS2TW070GP**	**VMVS2TW070G241**	**VMVS2TW070R5**
		1		**VMVS3TW070GP**	**VMVS3TW070G241**	**VMVS3TW070R5**
		¾	100	**VMVS2TW100GP**	**VMVS2TW100G241**	**VMVS2TW100R5**
		1		**VMVS3TW100GP**	**VMVS3TW100G241**	**VMVS3TW100R5**
		¾	150	**VMVS2TW150GP**	**VMVS2TW150G241**	**VMVS2TW150R5**
		1		**VMVS3TW150GP**	**VMVS3TW150G241**	**VMVS3TW150R5**
	Quad-Mount Pendant, Adjustable, Thru-Feed, 25° Angle, 12½° Angle	¾	50	**VMVS25Q050GP**	**VMVS25Q050G241**	**VMVS25Q050R5**
		¾	70	**VMVS25Q070GP**	**VMVS25Q070G241**	**VMVS25Q070R5**
		¾	100	**VMVS25Q100GP**	**VMVS25Q100G241**	**VMVS25Q100R5**
		¾	150	**VMVS25Q150GP**	**VMVS25Q150G241**	**VMVS25Q150R5**
	Stanchion Mount 25° Angle	1½	50	**VMVSJ050GP**	**VMVSJ050G241**	**VMVSJ050R5**
		1½	70	**VMVSJ070GP**	**VMVSJ070G241**	**VMVSJ070R5**
		1½	100	**VMVSJ100GP**	**VMVSJ100G241**	**VMVSJ100R5**
		1½	150	**VMVSJ150GP**	**VMVSJ150G241**	**VMVSJ150R5**
	Stanchion Mount Straight	1½	50	**VMVSP050GP**	**VMVSP050G241**	**VMVSP050R5**
		1½	70	**VMVSP070GP**	**VMVSP070G241**	**VMVSP070R5**
		1½	100	**VMVSP100GP**	**VMVSP100G241**	**VMVSP100R5**
		1½	150	**VMVSP150GP**	**VMVSP150G241**	**VMVSP150R5**

* For G243 Type III Compact Refractor, change "241" at end of catalog number to "243". Ex. VMVS2A050G243
For G245 Type V Compact Refractor, change "241" at end of catalog number to "245". Ex. VMVS2A050G245

† For R2 Glass Refractor, change "R5" at end of catalog number to "R2". Ex. VMVS2A050R2.
For R3 Glass Refractor, change "R5" at end of catalog number to "R3". Ex. VMVS2A050R3.

1. Add voltage suffix to end of catalog number

Standard Voltage Ballasts – 60Hz

	NEC/UL				CEC/CSA (cUL)		
Voltage	Multi Tap	Dual Tap	120V	480V	Tri Tap	Dual Tap	120V
Suffix	/MT	/DT	/120	/480	/TT	/DT	/120

Multi Tap and Dual Tap ballasts are powered for 277V

Optional Voltage Ballasts - 50 or 60Hz

	CEC/CSA (cUL) - CWI Isolated Ballasts				EXPORT		
Voltage	208V CWI	240V CWI	480V CWI	600V CWI	220V 60Hz	220V 50Hz	240V 50Hz
Suffix	/208CWI	/240CWI	/480CWI	/600CWI	/220	/220 50	/240 50

2. 150W HPS Luminaires: For 55V lamps - add suffix LX; for 100V lamps - add suffix CE. 50W HPS luminaire is dual tap only.

3. Options - Add the required option suffixes, see page 962, in alpha-numeric order.

Copyright© 2014 Eaton's Crouse-Hinds Business

VMV Series 150–175W Pulse Start Metal Halide

Champ® H.I.D. Luminaires

Cl. I, Div. 2, Groups A, B, C, D
Restricted Breathing Cl. I, Div. 2 & Zone 2 (Suffix S826)

Marine & Wet Locations
3, 3R, 4, 4X; IP66

To complete the catalog #, include information in note 1 below. For guards and other optics see VMV Series - Ordering By Components page.

	Mounting Style	Hub Size	Lamp Watts	BASIC CATALOG NUMBER With G24 Globe and P21 Guard	With G245 Type V Compact Refractor *	With R5 Glass Refractor †
	Pendant Mount	¾	150	**VMVM2A150GP S828**	**VMVM2A150G245 S828**	**VMVM2A150R5 S828**
		1		**VMVM3A150GP S828**	**VMVM3A150G245 S828**	**VMVM3A150R5 S828**
		¾	175	**VMVM2A175GP S828**	**VMVM2A175G245 S828**	**VMVM2A175R5 S828**
		1		**VMVM3A175GP S828**	**VMVM3A175G245 S828**	**VMVM3A175R5 S828**
	Flexible Pendant Mount	¾	150	**VMVM2HA150GP S828**	**VMVM2HA150G245 S828**	**VMVM2HA150R5 S828**
		¾	175	**VMVM2HA175GP S828**	**VMVM2HA175G245 S828**	**VMVM2HA175R5 S828**
	Ceiling Mount Thru-Feed	¾	150	**VMVM2C150GP S828**	**VMVM2C150G245 S828**	**VMVM2C150R5 S828**
		1		**VMVM3C150GP S828**	**VMVM3C150G245 S828**	**VMVM3C150R5 S828**
		¾	175	**VMVM2C175GP S828**	**VMVM2C175G245 S828**	**VMVM2C175R5 S828**
		1		**VMVM3C175GP S828**	**VMVM3C175G245 S828**	**VMVM3C175R5 S828**
	Wall Mount Thru-Feed	¾	150	**VMVM2TW150GP S828**	**VMVM2TW150G245 S828**	**VMVM2TW150R5 S828**
		1		**VMVM3TW150GP S828**	**VMVM3TW150G245 S828**	**VMVM3TW150R5 S828**
		¾	175	**VMVM2TW175GP S828**	**VMVM2TW175G245 S828**	**VMVM2TW175R5 S828**
		1		**VMVM3TW175GP S828**	**VMVM3TW175G245 S828**	**VMVM3TW175R5 S828**
	Quad-Mount Pendant, Adjustable Thru-Feed, 25° Angle, 12½° Angle	¾	150	**VMVM25Q150GP S828**	**VMVM25Q150G245 S828**	**VMVM25Q150R5 S828**
		¾	175	**VMVM25Q175GP S828**	**VMVM25Q175G245 S828**	**VMVM25Q175R5 S828**
	Stanchion Mount 25° Angle	1½	150	**VMVMJ150GP S828**	**VMVMJ150G245 S828**	**VMVMJ150R5 S828**
		1½	175	**VMVMJ175GP S828**	**VMVMJ175G245 S828**	**VMVMJ175R5 S828**
	Stanchion Mount Straight	1½	150	**VMVMP150GP S828**	**VMVMP150G245 S828**	**VMVMP150R5 S828**
		1½	175	**VMVMP175GP S828**	**VMVMP175G245 S828**	**VMVMP175R5 S828**

* For G241 Type I Compact Refractor, change "245" at end of catalog number to "241". Ex. VMVM2A150G241-S828
For G243 Type III Compact Refractor, change "245" at end of catalog number to "243". Ex. VMVM2A150G243-S828

† For R2 Glass Refractor, change "R5" at end of catalog number to "R2". Ex. VMVM2A150R2-S828.
For R3 Glass Refractor, change "R5" at end of catalog number to "R3". Ex. VMVM2A150R3-S828.

1. Add voltage suffix to end of catalog number

Standard Voltage Ballasts – 60Hz

	NEC/UL			CEC/CSA (cUL)	
Voltage	Multi Tap	120V	480V	Tri Tap	120V
Suffix	/MT	/120	/480	/TT	/120

Optional Voltage Ballasts - 50 or 60Hz

	EXPORT			
Voltage	220V 60Hz	220V 50Hz	230V 50Hz	240V 50Hz
Suffix	/220	/220 50	/230 50	/240 50

 Copyright© 2014 Eaton's Crouse-Hinds Business

Crouse-Hinds by EATON

Champ® H.I.D. Luminaires

To complete the catalog #, include information in notes 1, 2 and 3 below. For guards and other optics see VMV Series - Ordering By Components page.

	Mounting Style	Hub Size	Lamp Watts	BASIC CATALOG NUMBER With G24 Globe and P21 Guard	With G241 Type I Compact Refractor *	With R5 Glass Refractor †
	Pendant Mount	¾	70	**VMVM2A070GP**	**VMVM2A070G241**	**VMVM2A070R5**
		1		**VMVM3A070GP**	**VMVM3A070G241**	**VMVM3A070R5**
		¾	100	**VMVM2A100GP**	**VMVM2A100G241**	**VMVM2A100R5**
		1		**VMVM3A100GP**	**VMVM3A100G241**	**VMVM3A100R5**
		¾	175	**VMVM2A175GP**	**VMVM2A175G241**	**VMVM2A175R5**
		1		**VMVM3A175GP**	**VMVM3A175G241**	**VMVM3A175R5**
	Flexible Pendant Mount	¾	70	**VMVM2HA070GP**	**VMVM2HA070G241**	**VMVM2HA070R5**
		¾	100	**VMVM2HA100GP**	**VMVM2HA100G241**	**VMVM2HA100R5**
		¾	175	**VMVM2HA175GP**	**VMVM2HA175G241**	**VMVM2HA175R5**
	Ceiling Mount Thru-Feed	¾	70	**VMVM2C070GP**	**VMVM2C070G241**	**VMVM2C070R5**
		1		**VMVM3C070GP**	**VMVM3C070G241**	**VMVM3C070R5**
		¾	100	**VMVM2C100GP**	**VMVM2C100G241**	**VMVM2C100R5**
		1		**VMVM3C100GP**	**VMVM3C100G241**	**VMVM3C100R5**
		¾	175	**VMVM2C175GP**	**VMVM2C175G241**	**VMVM2C175R5**
		1		**VMVM3C175GP**	**VMVM3C175G241**	**VMVM3C175R5**
	Wall Mount Thru-Feed	¾	70	**VMVM2TW070GP**	**VMVM2TW070G241**	**VMVM2TW070R5**
		1		**VMVM3TW070GP**	**VMVM3TW070G241**	**VMVM3TW070R5**
		¾	100	**VMVM2TW100GP**	**VMVM2TW100G241**	**VMVM2TW100R5**
		1		**VMVM3TW100GP**	**VMVM3TW100G241**	**VMVM3TW100R5**
		¾	175	**VMVM2TW175GP**	**VMVM2TW175G241**	**VMVM2TW175R5**
		1		**VMVM3TW175GP**	**VMVM3TW175G241**	**VMVM3TW175R5**
	Quad-Mount Pendant, Adjustable Thru-Feed, 25° Angle, 12½° Angle	¾	70	**VMVM25Q070GP**	**VMVM25Q070G241**	**VMVM25Q070R5**
		¾	100	**VMVM25Q100GP**	**VMVM25Q100G241**	**VMVM25Q100R5**
		¾	175	**VMVM25Q175GP**	**VMVM25Q175G241**	**VMVM25Q175R5**
	Stanchion Mount 25° Angle	1½	70	**VMVMJ070GP**	**VMVMJ070G241**	**VMVMJ070R5**
		1½	100	**VMVMJ100GP**	**VMVMJ100G241**	**VMVMJ100R5**
		1½	175	**VMVMJ175GP**	**VMVMJ175G241**	**VMVMJ175R5**
	Stanchion Mount Straight	1½	70	**VMVMP070GP**	**VMVMP070G241**	**VMVMP070R5**
		1½	100	**VMVMP100GP**	**VMVMP100G241**	**VMVMP100R5**
		1½	175	**VMVMP175GP**	**VMVMP175G241**	**VMVMP175R5**

* For G243 Type III Compact Refractor, change "241" at end of catalog number to "243". Ex. VMVM2A070G243
For G245 Type V Compact Refractor, change "241" at end of catalog number to "245". Ex. VMVM2A070G245

† For R2 Glass Refractor, change "R5" at end of catalog number to "R2". Ex. VMVM2A070R2.
For R3 Glass Refractor, change "R5" at end of catalog number to "R3". Ex. VMVM2A070R3.

1. Add voltage suffix to end of catalog number

Standard Voltage Ballasts – 60Hz

	NEC/UL			CEC/CSA (cUL)	
Voltage	Multi Tap	120V	480V	Tri Tap	120V
Suffix	/MT	/120	/480	/TT	/120

Optional Voltage Ballasts - 50 or 60Hz

	CEC/CSA (cUL) - CWI Isolated Ballasts			EXPORT			
Voltage	208V CWI	480V CWI	600V CWI	220V 60Hz	220V 50Hz	230V 50Hz	240V 50Hz
Suffix	/208CWI	/240CWI	/600CWI	/220	/220 50	/230 50	/240 50

2. 70W ballast not available in 480V.

3. Options - Add the required option suffixes, see page 962, in alpha-numeric order.

Copyright© 2014 Eaton's Crouse-Hinds Business

VMV Series – Ordering by Components

VMV luminaires are available in components.

A complete luminaire consists of:

I. Champ Cover (Mounting Module)

II. VMV Ballast Housing – Include voltage and required option(s)

III. Optical & Guard components – Globe, Reflector, Refractor, Guard

I. Champ Cover (Mounting Module):

Type	Conduit	Cat. #
Pendant	¾"	**APM2**
	1"	**APM3**
Flexible Pendant	¾"	**HPM2**
Ceiling*	¾"	**CM2**
	1"	**CM3**
Wall	¾"	**TWM2**
	1"	**TWM3**
Stanchion – 25 Degree Angle	1½"	**JM5**
Stanchion – Straight	1½"	**PM5**
Quad-Mount	¾"	**QM25**

*Not available with V2PC photocell.

II. Ballast Housings:

Complete catalog number must have the **voltage suffix** (MT shown) and any **options suffixes**.

Lamp Type	Lamp Watts	Cat. # For Globe and Compact Refractor	Cat. # For Large Refractor
High Pressure Sodium	50	**VMVS050/DT**	**VMVS050/MT RM**
	70	**VMVS070/MT**	**VMVS070/MT RM**
	100	**VMVS100/MT**	**VMVS100/MT RM**
	150	**VMVS150/MT LX**	**VMVS150/MT LX RM**
Metal Halide	70	**VMVM070/MT**	**VMVM070/TT RM**
	100	**VMVM100/MT**	**VMVM100/MT RM**
	175	**VMVM175/MT**	**VMVM175/MT RM**

III. Globe, Reflectors, Refractors, Guards:

Type	Cat. #
Globe	**G24**
Globe – Teflon Coated	**G24 S808**
Globe Guard	**P21**
Reflector – Dome	**RD70**
Reflector – Angle	**RA70**
Compact Refractor Type 1	**G241**
Compact Refractor Type 3	**G243**
Compact Refractor Type 5	**G245**
Compact Refractor Guard	**P241**
Large Refractor Type 2	**R2**
Large Refractor Type 3	**R3**
Large Refractor Type 5	**R5**
Large Refractor Guard	**P23**
Large Plastic Refractor Type 2	**PR2**
Large Plastic Refractor Type 3	**PR3**
Large Plastic Refractor Type 5	**PR5**

 Copyright© 2015 Eaton's Crouse-Hinds Business

Champ® H.I.D. Luminaires

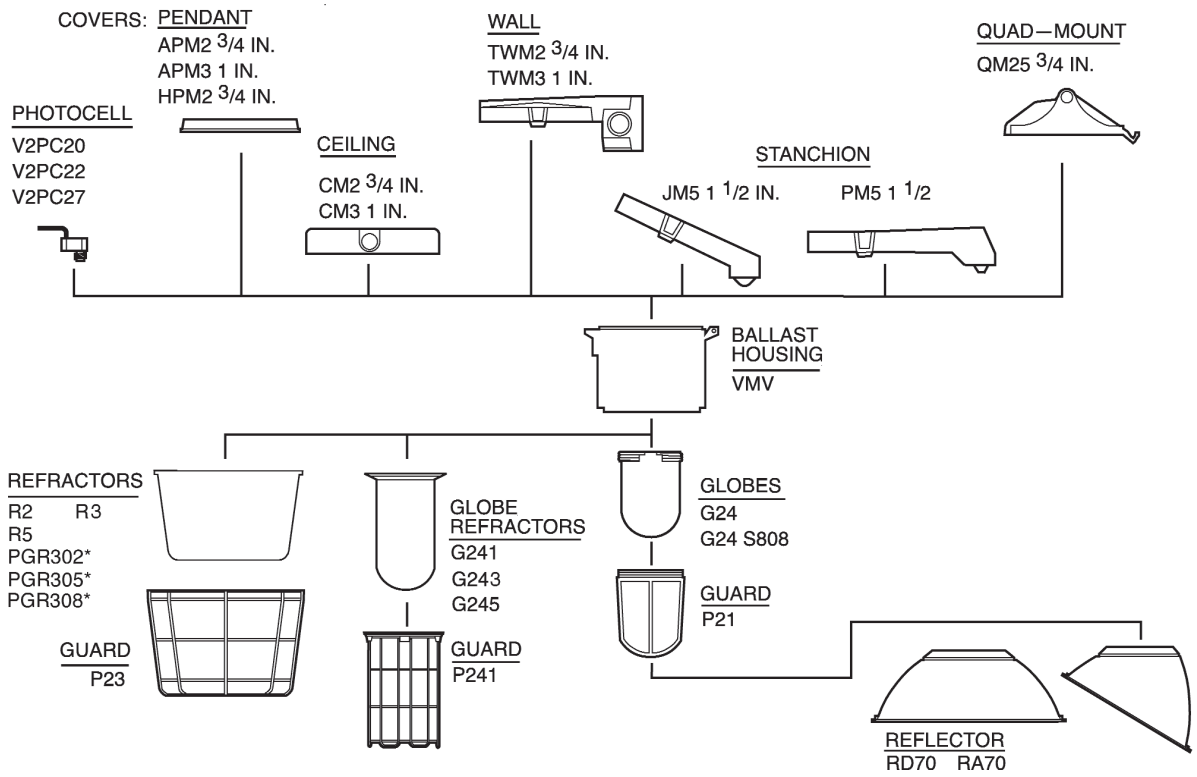

*Plastic refractors are for non-hazardous areas only (50–100W Max.)

 Copyright© 2013 Eaton's Crouse-Hinds Business

Champ® H.I.D. Luminaires

	Lamp		Rated Ambient °C	Class I, Division 2				Class II, Division 1		Class I, Zone 2		Supply Wire Suitable For °C	
Cat. #	Wattage	Type		Globe (G24, G241, G245)	Globe (G24) w/ Reflector (RA70 or RD70)	Refractor (R2, R3, or R5)	Group	Globe (G24) w/ or w/o Reflector (RA70 or RD70)	Simultaneous Presence Class I, Div. 2 Class II, Div. 1	Restricted Breathing Suffix S826 w/ Globe (G24, G241, G245)	Factory Sealed Suffix S865 AEx nA nR II	Globe (G24, G241, G245)	Refractor (R2, R3, or R5)
VMVM70	70	MH	40	T3A	T3A	T3A		T3A		T5	T3	90	90
VMVM70	70	MH	55	T3	T3	T3		T3		T4	T3	90	90
VMVM70	70	MH	65	T3	T3	T3		T3		T4	T3	90	90
VMVM100	100	MH	40	T2D	T2D	T2D		T2D		T4	T3	90	90
VMVM100 S849	100	MH	40	T2	T2	T2		T2		T4	T3	75	75
VMVM100	100	MH	55	T2D	T2D	T2D		T2D		T4	T3	90	90
VMVM150	150	MH	40	T2A	T2A	T2B		T2A		T3	T3	90	90
VMVM175	175	MH	40	T2A	T2A	T2B		T2A		T3	T3	90	90
VMVS50	50	HPS	40	T3A	T3A	T3B	EFG	T4A	T3A	T5	T3	75	65
VMVS50	50	HPS	55	T3A	T3A	T3A	EFG	T4	T3	T5	T3	75	75
VMVS50	50	HPS	65	T3	T3	T3	EFG	T4	T2D	T5	T3	75	75
VMVS70	70	HPS	40	T3	T3	T3B	EFG	T3C	T2C	T4	T3	75	65
VMVS70	70	HPS	55	T3	T3	T3	EFG	T3C	T2B	T4	T3	90	90
VMVS100	100	HPS	40	T2C	T2C	T2D	EFG	T3A	T2A	T4	T3	90	75
VMVS100	100	HPS	55	T2B	T2B	T2C	EFG			T3	T3	105	90
VMVS150	150	HPS	40	T2A	T2A	T2B				T3	T3	90	85
VMVS150	150	HPS	55	T2	T2	T2A				T3	T3	105	105
VMVIG055	55	Induction	40	T2C	T2C	—				T6	—	65	—
VMVIG055	55	Induction	55	T2C	T2C	—				T5	—	65	—

The Class I, Division 2 T-codes apply to luminaires without the restricted breathing (S826) or factory sealed (S865) options. These luminaires are listed to UL 844. UL844 specifies how the temperatures are measured.

The Class I, Zone 2 T-codes are for luminaires that are additionally listed to UL 60079-15 that specify a different method for measuring temperatures. Since NEC® 501.1 states that equipment "…for use in Class I, Zone 0, 1, or 2 locations shall be permitted in Class I, Division 2 locations…" then these luminaires are suitable for Class I, Division 2 but with cooler temperature ratings. They also have the advantage of meeting the more rigorous mechanical tests of UL 844.

 Copyright© 2014 Eaton's Crouse-Hinds Business

Dimensions
In Inches:

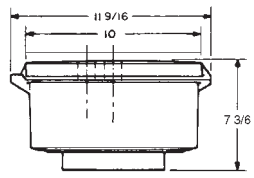

Pendant Mount

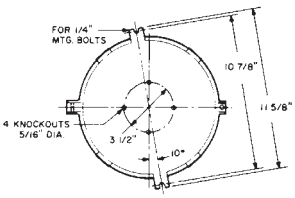

Ceiling Mount Top View

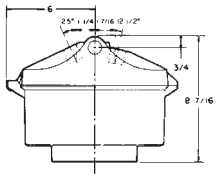

Quad-Mount

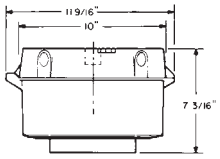

Ceiling Mount

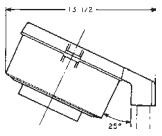

25° Angle Stanchion Mount

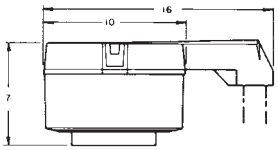

Straight Stanchion Mount

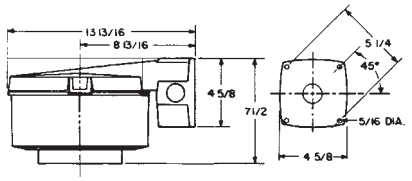

Wall Mount

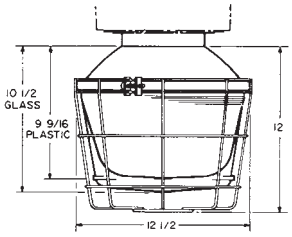

Luminaire With: Refractors, Guard

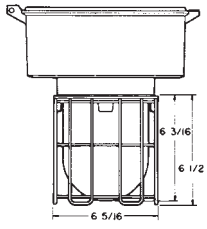

Compact Refractor

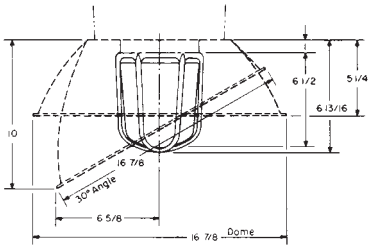

Globe, Guard, Reflectors

Net Luminaire Weights:

Luminaire Series	Lamp Watts 50	70	100	150	175
Luminaire with Globe, Guards (lbs.):					
VMVS	13½	14½	14½	14½	
VMVM		13	13¼		15½
Luminaire with Glass Refractor (lbs.):					
VMVS	21¾	22¾	22¾	22¾	
VMVM		21	21½		23¾

Type	Lbs.	Type	Lbs.
Add for mounting modules:			
Pendant	1¼	Quad-Mount	3½
Flexible Pendant	1½	Angle Stanchion	3½
Ceiling	2¾	Straight Stanchion	4½
Wall	4½		
Add for reflectors:			
Dome	1½	30° Angle	1½

Deduct: ½" lb. for fixture without P21 Guard

 Copyright© 2013 Eaton's Crouse-Hinds Business

Champ® H.I.D. Luminaires

Lamp: 100W/E – 23½ high pressure sodium (HPS)
Total bare lamp lumens: 9500

NOTE: All data provided is for high pressure sodium luminaires with 100W/E–23-½ clear lamps. Use conversion factors (multipliers) shown below for other clear lamp types and wattages. Consult Eaton's Crouse-Hinds for additional photometric data on any *Champ* Series luminaire.

Luminaire with Globe and Dome Reflector

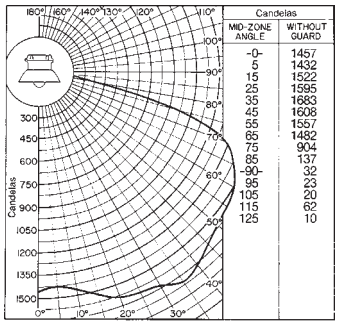

Multipliers (for use with candela curve only).

Luminaire Series	Lamp Watts	Conversion Factor
	50	0.42
VMVS	70	0.67
	150	1.68

Luminaire spacing ratio: 1.85

Coefficient of Utilization

Effective Floor Cavity Reflectance 20%

% Reflectance		Room Cavity Ratio				
Eff. Ceil.	Wall	1	2	3	4	5
	50	.823	.707	.610	.529	.464
80	30	.784	.646	.538	.451	.384
	10	.749	.594	.482	.391	.324
	50	.804	.690	.597	.517	.452
70	30	.767	.633	.530	.445	.377
	10	.734	.587	.477	.388	.321
	50	.765	.658	.571	.494	.434
50	30	.735	.611	.513	.431	.368
	10	.709	.569	.466	.381	.318
	50	.731	.629	.546	.473	.416
30	30	.708	.591	.497	.419	.357
	10	.685	.555	.456	.375	.312
	50	.701	.603	.524	.454	.399
10	30	.681	.569	.482	.406	.348
	10	.662	.541	.446	.367	.307
0	0	.644	.521	.427	.348	.288

% Reflectance		Room Cavity Ratio				
Eff. Ceil.	Wall	6	7	8	9	10
	50	.412	.366	.326	.296	.258
80	30	.334	.290	.253	.224	.187
	10	.278	.239	.201	.175	.142
	50	.403	.359	.320	.291	.252
70	30	.329	.285	.250	.221	.187
	10	.274	.235	.200	.174	.142
	50	.386	.344	.307	.279	.244
50	30	.320	.277	.244	.216	.182
	10	.271	.231	.197	.172	.140
	50	.371	.329	.296	.269	.235
30	30	.312	.272	.237	.210	.178
	10	.267	.227	.195	.170	.137
	50	.357	.319	.285	.260	.227
10	30	.304	.266	.232	.206	.173
	10	.263	.224	.192	.167	.135
0	0	.245	.207	.176	.152	.120

Isofootcandle Chart: Luminaire with Globe and Dome Reflector

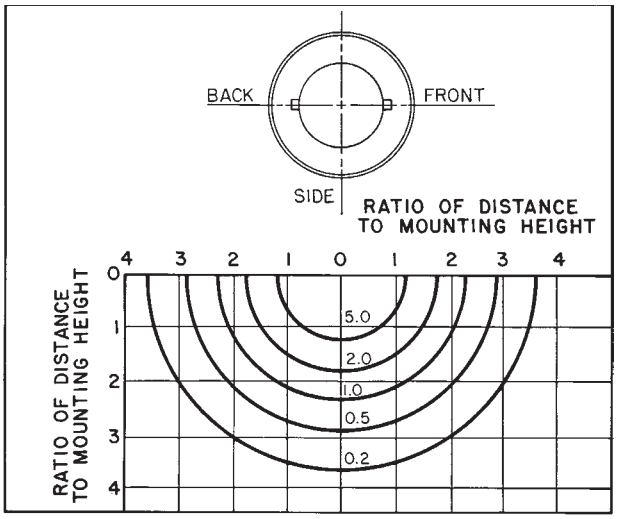

Isofootcandle Chart: Luminaire with Globe and 30° Angle Reflector

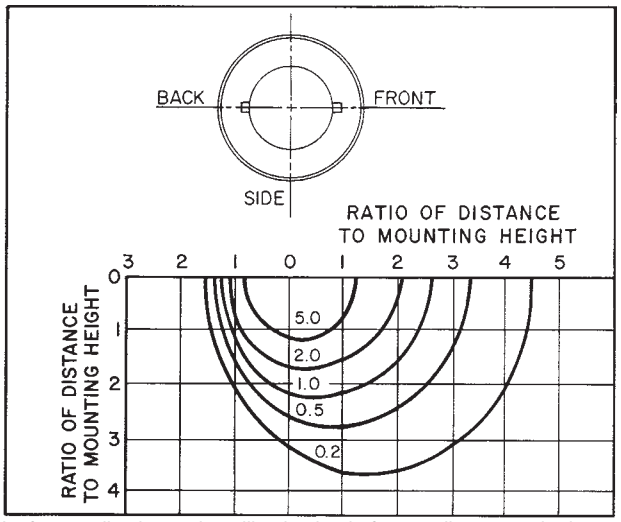

Isofootcandle charts show illumination in footcandles on work plane 10 feet below light center. Multiply by factor shown to convert to other mounting heights.

Height (Ft.)	Factor	Height (Ft.)	Factor
6	2.78	14	0.51
8	1.56	16	0.39
12	0.70		

www.crouse-hinds.com US: 1-866-764-5454 CAN: 1-800-265-0502 Copyright© 2013 Eaton's Crouse-Hinds Business

Crouse-Hinds by EATON

Champ® H.I.D. Luminaires

Lamp: 100W/E0 – 23½ high pressure sodium (HPS)

Luminaire with I.E.S. Type V Glass Refractor

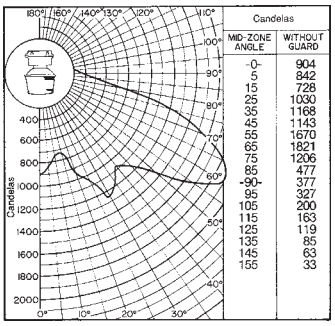

MID-ZONE ANGLE	WITHOUT GUARD
0	904
5	842
15	728
25	1030
35	1168
45	1143
55	1670
65	1821
75	1206
85	477
90	377
95	327
105	200
115	163
125	119
135	85
145	63
155	33

NOTE: Photometric data was developed using a 100 watt clear high pressure sodium lamp (9500 lumens). For other clear lamps, use the following conversion factors (multipliers):

Luminaire Series	Lamp Watts	Conversion Factor
VMVS	50	0.42
	70	0.67
	150	1.68

Luminaire spacing ratio: 2.0

Coefficient of Utilization

Effective Floor Cavity Reflectance 20%

% Reflectance Eff. Ceil.	Wall	Room Cavity Ratio 1	2	3	4	5
80	50	.848	.709	.597	.508	.437
	30	.796	.631	.509	.414	.343
	10	.750	.566	.439	.341	.271
70	50	.818	.682	.576	.489	.419
	30	.770	.611	.493	.402	.331
	10	.726	.552	.428	.334	.264
50	50	.759	.632	.533	.451	.389
	30	.720	.574	.464	.377	.312
	10	.685	.521	.407	.318	.253
30	50	.706	.586	.493	.417	.359
	30	.675	.538	.435	.354	.291
	10	.645	.495	.386	.302	.240
10	50	.658	.544	.457	.385	.331
	30	.632	.504	.408	.331	.274
	10	.608	.469	.366	.286	.227
0	0	.581	.441	.340	.260	.203

% Reflectance Eff. Ceil.	Wall	Room Cavity Ratio 6	7	8	9	10
80	50	.384	.337	.299	.272	.238
	30	.292	.249	.214	.189	.159
	10	.226	.189	.154	.132	.103
70	50	.369	.325	.288	.262	.229
	30	.283	.240	.203	.183	.156
	10	.218	.182	.150	.130	.105
50	50	.341	.301	.266	.243	.214
	30	.266	.225	.195	.173	.146
	10	.209	.173	.143	.124	.099
30	50	.316	.277	.248	.225	.198
	30	.249	.213	.182	.161	.136
	10	.199	.163	.136	.117	.093
10	50	.292	.258	.223	.209	.134
	30	.233	.200	.171	.151	.127
	10	.188	.154	.128	.110	.087
0	0	.165	.133	.108	.091	.070

 Copyright© 2013 Eaton's Crouse-Hinds Business

APPENDIX B
VFPA CONSULTATION

APPENDIX B -
TABLE 1.0

CONSULTATION SUMMARY FOR VANCOUVER FRASER PORT AUTHORITY

Source of Issue	Issue Description	Trans Mountain's Response	Addressed with NEB Condition or TMEP Commitment
In- person meeting on June 11, 2014	• TMEP should connect with the VFPA energy manager on lighting	• Trans Mountain will continue to engage with VFPA, including the energy manager on lighting for WMT • The Light Emissions Management Plan has been developed and will be submitted for review to the VFPA as part of the WMT development permit application	• NEB Condition 82: **Light Emissions Management Plan for the Westridge Marine Terminal.** Trans Mountain must file with the NEB, **at least 3 months prior to commencing construction at the Westridge Marine Terminal**, a Light Emissions Management Plan for the Westridge Marine
In- person meeting on June 27, 2016	• Lighting equipment should be "appropriate" – references later on to all guidelines available on Port's website.	• Trans Mountain will continue to engage with the VFPA on the lighting plan for WMT • 'Appropriate' lighting equipment has been proposed and is included in the Light Emissions Management Plan (Appendix A) for consideration. • The Light Emissions Management Plan has been developed and will be submitted for review to the VFPA as part of the WMT • Development permit application	• NEB Condition 82: **Light Emissions Management Plan for the Westridge Marine Terminal.** Trans Mountain must file with the NEB, **at least 3 months prior to commencing construction at the Westridge Marine Terminal**, a Light Emissions Management Plan for the Westridge Marine
In- person meeting on January 19, 2017	• Lighting is part of the energy efficiency study • Connect with VFPA energy manager	• Trans Mountain will continue to engage with the VFPA on the lighting plan for WMT, and has made contact with the VFPA Energy Manager. • The Light Emissions Management Plan has been developed and will be submitted for review to the VFPA as part of the WMT development permit application • Lighting design, and associated energy efficiency is outlined in Section 2.5 of the Light Emissions Management Plan, with reference luminaries information included in Appendix A.	• NEB Condition 82: **Light Emissions Management Plan for the Westridge Marine Terminal.** Trans Mountain must file with the NEB, **at least 3 months prior to commencing construction at the Westridge Marine Terminal**, a Light Emissions Management Plan for the Westridge Marine