Fraser Grain Terminal: Amendment Application – Preliminary Report

Prepared for:

Fraser Grain Terminal Ltd.
1500-570 Granville Street
Vancouver, BC V6C 3P1

Project No. 103083-02

Prepared by:

Hemmera Envirochem Inc.
18th Floor, 4730 Kingsway
Burnaby, BC V5H 0C6
T: 604.669.0424
F: 604.669.0430
hemmera.com

July 7, 2020

TABLE OF CONTENTS

LIST OF ATTACHMENTS

1.0 INTRODUCTION

Fraser Grain Terminal Ltd. (FGT) is currently constructing the Fraser Grain Export Terminal (Export Terminal) at Fraser Surrey Docks in Surrey, BC under PER Permit 15-041. FGT proposes the addition of a grain cleaning system, a component which is not included in the original project design.

The purpose of this preliminary version of the Amendment Application is to provide an overview of the design changes and a summary of the study updates. The results of study updates that have been completed are included in this report. Where studies are still underway, a summary of the updates that are being conducted is provided.

2.0 SUMMARY OF DESIGN CHANGES

FGT is proposing to add a grain cleaning system to meet export standards. While the majority of the receiving grain is anticipated to be "export shipment ready" when delivered to the Export Terminal, being equipped to clean grain is critical to consistently meet any export market requirements. The cleaning system is designed to remove dust, oversized or unthreshed grains, and other agricultural products (e.g. chaff, leaves, pods, etc. from wheat, canola, and peas).

2.1 Cleaning System Components

The grain cleaning system will consist of the components below. These components are described in detail in **Attachment A**.

- Concrete foundation supported on Rammed Aggregate Piers (RAP)
- A three-level steel support structure. The north and east walls will be enclosed with preformed metal painted cladding. The south and west sides are open to the atmosphere and obscured from view by the adjacent bins. The structure is 40' wide x 40' long x 80' tall.
- Cleaning equipment, which will be enclosed in the support structure. A description of the cleaning equipment can be found in sections 2.1.3.1 to 2.1.3.4 of **Attachment A**.
- Dust control systems, including:
  - Three grade-mounted baghouse dust collection systems:
    - Two for primary cleaners (as described in sections 2.1.3.1 and 2.1.3.2 of **Attachment A**)
    - One for secondary cleaners (as described in sections 2.1.3.3 and 2.1.3.4 of **Attachment A**)
  - One point-source dust collector for screenings[1] equipment.
  - One point-source dust collector for byproduct[2] equipment.
  - Retractable dust control loadout spout for loading screenings to trucks.
- Enclosed conveyance system throughout using belt conveyors, screw conveyors, drag conveyors and bucket elevators.
- Two 4,200 cubic foot screenings storage bins.
- A new modular Motor Control Centre (MCC) building to hold new switchgear. The new MCC will be located adjacent to the existing container loading MCC. The approximate footprint of the new MCC will be 12' x 40', and it will be a one storey building.
- Additional switching station module and transformer for high voltage power.

The proposed location of the cleaner and its components is shown on FWS drawings P001 and P002, attached. The system uses a mechanical cleaning process, with no water or cleaning agents required.

Screenings removed by cleaning will be collected via a baghouse dust collection system and will either be stored for blending into "overclean" grain intended for export or will be shipped via truck to the local feed market.

[1] Screenings refer to the material being removed during the cleaning process.
[2] Byproduct refers to a secondary clean product intended for export

2.2 Design Considerations

The grain cleaning system has been designed to minimize impacts to the local environment and follows the guidelines outlined in the PER permit. These design considerations include:

- Location of the grain cleaning system:
  - The grain cleaning system is in a central area next to the approved steel bins (currently under construction). This minimizes project footprint and minimizes the size and length of additional grain handling equipment. The cleaned grain will be routed to the approved steel bins for storage.
  - The support structure is shorter than the current approved large steel bins and is not anticipated to visually impact neighbors (see drawings P003 and P004).
  - The grain cleaning system is positioned on an existing industrial site, so no clearing of land or changes to existing project boundaries is required (see drawing P002).
- Construction of the cleaning system:
  - Construction is estimated to take approximately six months starting in early fall of 2020. The first three months of the grain cleaning system will overlap with the construction of the Export Facility (anticipated to be complete by the end of 2020).
  - There would be some limited additional truck traffic during construction. No overweight loads are expected with only three oversize loads anticipated.
  - FGT intends to utilize the contractors who are already mobilized on-site, and who are familiar with the current project details and environmental requirements.
- Operation of the cleaning system:
  - The grain cleaning system shares the bucket elevator used for container loading. Operationally, this means that when the grain cleaning system is being utilized, the container loading facility is not functioning to load containers for outbound traffic.
  - The grain cleaning system will be operated from the main control system with no operators in the cleaning building, except for routine inspections.
  - The dedicated dust control system will only operate when the container loading system is not operating, thus eliminating incremental noise and dust emissions from having both dust control systems operating simultaneously.
  - The additional cleaning equipment and associated conveyances are all 75% smaller in motor size and conveyance capacity relative to the equipment and conveyances already on site. Because of the size/capacity of the new equipment and the sheltered location, there will a minimal impact on noise emissions to the surrounding neighbours.
  - Central baghouse filters and point source filters will remove dust from conveyances and cleaning equipment.
  - All grain cleaning equipment will function on the basis of weight and size separation. No water or chemical usage is required.
  - Primary hours of operation are 12 hours a day (overnight) and 7 days a week for 39 weeks per year. Cleaning may also occur during daytime hours on weekdays and weekends when commercial and seasonal conditions require which may extend operations up to 52 weeks per year, if necessary. Container loading will not be operational when grain cleaning occurs, thereby reducing electrical load and truck traffic.

- Other:
  - No water supply or sanitary sewer is needed for the addition of the cleaning system. All grain cleaning process are dry processes.
  - No changes or additions are required to natural gas service, main electrical service, or storm sewer systems.
  - An upgrade is required to the existing switching station. Existing underground feeders will bring power into the site, and no additional cabling or excavation is required.

3.0 DRAWING REQUIREMENTS

The following engineering drawings have been prepared by FWS and are included in **Attachment B**:

- General arrangement drawings:
  - Drawing P001 Surrounding Area Plan
  - Drawing P002 Facility General Arrangement
  - Drawing P003 Storage Bin Cross Section – Looking West
  - Drawing P004 Storage Bin Cross Section – Looking South
  - Drawing P005 Temporary Building Location
  - Drawing P006 Code Compliance Plan
- Process flow drawings:
  - Drawing F001 Flow Diagram
  - Drawing F002 Dust Flow Diagram

A civil, drainage, and utilities drawing has been prepared by ISL to update site stormwater management, and is included in **Attachment C**:

- Stormwater Management Plan 32022C-08

4.0 UPDATES TO REQUIRED STUDIES, REPORTS, AND PLANS

All required studies from the May 12, 2016 Application Submission Requirements for the Export Facility have been reviewed for required updates. The results of this review are described below.

4.1 Spill Prevention, Emergency Response, and Hazardous Materials Handling Plan

Construction and operation of the grain cleaning system will not require the use of any additional hazardous materials or emergency response measures. Updates to the Spill Prevention, Emergency Response, and Hazardous Materials Handling Plan will be not be required.

4.2 Geotechnical Report

The grain cleaning system location falls within the area which is addressed by the geotechnical report prepared for the Export Terminal by GeoPacific Consultants Ltd., titled "Geotechnical Report for Proposed Fraser Grain Terminal, Fraser Surrey Docks, Surrey, B.C.", and dated March 29, 2018. The design of the grain cleaning system is in accordance with the recommendations of this report.

4.3 Stormwater Pollution Prevention Plan

All underground utilities and drainage remain unchanged. As shown in the ISL drawing (**Attachment C**) and corresponding memo (**Attachment D**), the grain cleaning system constitutes a 3.4% increase in impervious surfaces and will have negligible impact on the current storm sewer catchments and water quality control systems currently planned.

The Stormwater Pollution Prevention Plan will be updated to reflect revised changes in stormwater calculations. No other changes to the operational processes or potential pollutants will be required. The revised plan will be attached to the final version of this report.

4.4 Traffic Impact Study

During construction, there will be some limited additional truck traffic. No overweight loads are expected with only three oversize loads anticipated.

During operations, total combined truck traffic will increase from 98 trucks to 103 trucks/weekday, a 5% increase in average daily truck traffic. These trucks will be used to deliver cleaning by-products to the local market.

Stantec previously prepared a transportation impact assessment (TIA) for the Export Terminal in February 2017. The overall conclusion of the study indicated that the impact of the Export Terminal is minimal in both the short and long term.

The results of the TIA were reviewed to incorporate the grain cleaning system. The memo in **Attachment E** describes the results of this review. In summary, from the proposed additional trips expected for the grain cleaning system, traffic impact to the existing road network is expected to be insignificant. The net increase in trips for the inbound and outbound totals approximately four vehicle trips per hour in the AM and PM peak hours. With this insignificant increase in the expected traffic pattern, traffic operations are expected to operate similarly.

4.5 Rail Operations Plan

No changes to rail operations required for the Export Terminal will occur as a result of the proposed design change. As such, no updates to this plan are required.

4.6 Marine Structures Study

No changes to marine structures are proposed. As such, no updates to this study are required.

4.7 Marine Traffic Information

No changes to marine traffic will occur as a result of the proposed design change. As such, no updates to this information are required.

4.8 BATNEC Report

The purpose of the addition of the grain cleaning system to the Export Facility is to reduce the environmental footprint of cleaning grain for shipping at this facility. The design aims to:

- Reduce fuel emissions from rail and truck transport.
- Utilize existing equipment already onsite.
- Reduce the amount of people required to control and maintain the equipment during operation.

The grain coming to the facility will mostly be cleaned at prairie grain terminals in western Canada, to reduce hauling screenings and dust via rail to the Export Terminal. To meet export standards, the grain may require additional cleaning. The addition of the grain cleaning system will also reduce the need to ship grain locally to another elevator to be cleaned, then shipped again via truck or rail back to the Export Facility for loading a ship.

The cleaning process, although simple, can incorporate multiple pieces of equipment and separate systems. FGT is re-purposing existing equipment and storage bins, minimizing construction costs, emissions and overall power consumption. The operation of the cleaners is also planned to happen at off peak times (nights and weekend) to minimize the peak energy demand on the facility and effect on neighbors.

The grain cleaning machines were selected to be a state-of-the art cleaning system that uses simple controls and minimal people to operate. The primary cleaning system is designed to handle multiple commodities with changes to airflow only which are easily controlled remotely or on the outside of the machine and minimize vibration and screen changes. In comparison to other grain cleaning solutions, this solution has fewer motors, smaller overall footprint compared to traditional machines. Due to the large air volumes drawn from the machine and grain flow, fugitive dust is minimized in the first two cleaning steps. The re-introduction of the dust back into the clean grain stream also minimizes the handling requirements and dust generation. Other possibilities for handling screenings and dust can include making pellets for animal feed. This is an energy intensive process that also creates significant noise in comparison to the small volume, fully enclosed equipment planned for this operation.

4.9 Environmental Noise Assessment

Additional noise source equipment such as conveyors, fans and blowers are not expected to increase sound pressure levels at nearby residences due to the location of the grain cleaning system in the central area. No additional train or shipping traffic is proposed and a minor increase from 98 trucks to 103 trucks/weekday is proposed.

The grain cleaning system shares the bucket elevator used for container loading. Operationally, this means that when the cleaning system is being utilized, the container loading facility is not functioning to load containers for outbound traffic. In addition, the dedicated dust control system will only operate when the container loading system is not operating, thus eliminating incremental noise emissions from having both dust control systems operating simultaneously.

Due to these considerations, the additional noise sources are anticipated to generate negligible increases on noise levels at receptors.

The noise model is currently being updated to incorporate the grain cleaning system and other recent design changes. Predicted noise levels at nearby receptors will be assessed and compared to the original assessed and criteria values. Mitigation measures will be applied as needed.

The results of this study are anticipated to be available near the end of August 2020. We note that we are aiming to submit the amendment application in July 2020. The overall conclusions and proposed mitigation measures related to noise impacts are not anticipated to change from those proposed in the August 2018 PER submittal.

4.10 Environmental Air Assessment

The supplementary dust filtration unit will consist of a baghouse dust collection system. Truck traffic during operations will increase from 98 trucks to 103 trucks/weekday. The grain cleaning system shares the bucket elevator used for container loading. Operationally, this means that when the cleaning system is being utilized, the container loading facility is not functioning to load containers for outbound traffic. In addition, the dedicated dust control system will only operate when the container loading system is not operating, thus eliminating incremental dust emissions from having both dust control systems operating simultaneously. Due to these considerations, the additional dust sources are anticipated to generate negligible increases in emissions and thus no significant increase in air quality concentrations at receptors are expected.

The air dispersion model being conducted presently for Metro Vancouver for the existing design will be updated to include emissions sources from the grain cleaning system including the baghouse dust collections system (three baghouses) and two point-source filters.

The results of this study are anticipated to be available near the end of August 2020. We note that we are aiming to submit the amendment application in July 2020. The overall conclusions and proposed mitigation measures are not anticipated to change.

4.11 Energy Efficiency Study

The design of the grain cleaning system will follow National Energy Code requirements as outlined in the Project Permit 15-041. LED lighting and premium efficiency motors shall be used for process equipment. Energy consumption levels will increase slightly, compared to the original project design. Changes are as follows:

- Horsepower:
  - Total horsepower (hp) of main plant, per original permit: 5,000 hp
  - Total revised hp of main plant plus proposed cleaning addition: 5,289 hp (5.6% increase)
- Power consumption:
  - Total anticipated annual power consumption, per original permit: 6.78 GWhr
  - Total revised anticipated annual power consumption of main plant plus proposed cleaning addition: 7.43 GWhr (9.6% increase)
- Power demand:
  - Total anticipated power demand, per original permit: 4.12 MVA
  - Total revised anticipated power demand of main plan plus proposed cleaning addition: 4.52 MVA (9.7% increase)

The majority of cleaning will occur in the nights and weekends. As most other businesses in the vicinity have reduced power consumption at that time, the impact is expected to be negligible. The additional load in off-peak hours will be beneficial to BC Hydro in keeping the power demand and line voltage stable. The cleaners may occasionally be run in the daytime and is not expected to create a significant additional demand as the container loading area will be shut down to offset the operations.

4.12 Viewscape and Shade Impact Analysis

The maximum height of the towers is shorter than, or at the same elevation, as the current large steel bins and existing catwalks (see drawings P003 and P004 in **Attachment B**). The additional storage bins, dust control systems and main cleaner support structure are all less than half the height of the existing bins and towers. As such, viewscape and shade impacts are anticipated to be negligible.

4.13 Alternative Siting Options

The location and configuration of the overall Export Terminal will remain unchanged. The grain cleaning system is in a central area next to the approved steel bins (currently under construction). This minimizes project footprint and minimizes the size and length of additional grain handling equipment. The cleaned grain will be routed to the approved steel bins for storage.

4.14 Archaeological Assessment

No excavation is required to construct the grain cleaning system. As such, no impacts to archaeological resources are anticipated.

4.15 Construction Environmental Management Plan

Contractors will continue to follow the same design and installation practices approved in the Construction Environmental Management Plan (CEMP). Proposed construction activities associated with the cleaner will be reviewed and included in the CEMP as required. As no new construction techniques are proposed, any updates are anticipated to be minor.

A revised CEMP will be attached to the final version of this report.

4.16 Soil and Groundwater Management Plan

Approximately half of the building slab for the cleaner is located over the previously identified contaminated groundwater area. Consistent with the previously approved silo and shiploader foundation, rammed aggregate piles (RAPs) will be installed to reduce liquefaction spread and improve bearing capacity. As no new techniques are proposed, updates are not anticipated to the Soil and Groundwater Management Plan.

The currently approved Groundwater Monitoring Plan, including quarterly groundwater testing, will continue to be implemented throughout the construction schedule and operations as required by the conditions of the Project Permit.

4.17 Nesting Bird Survey

The requirements for a nesting bird survey remain unchanged from those already defined in the CEMP.

4.18 Species at Risk Assessment

The potential effects to species at risk remain unchanged from those identified in the Habitat Assessment Report.

4.19 Fire and Explosion Plan

The Export Terminal, including the grain cleaning system, has been designed to employ the best available material handling technology for agricultural products, and to follow best engineering practices where code requirements are not specific or not applicable.

Please refer to the Fire and Explosion Plan (**Attachment F**) for details of fire and explosion prevention and mitigation strategies for the main plant. The grain cleaning system will utilize the same fire access roads and hydrants already on site for firefighting.

4.20 Dust Hazard Analysis

A preliminary Dust Hazard Analysis (DHA) was completed to establish design parameters for the grain cleaning system addition (**Attachment G**). This preliminary DHA reviews the process equipment, identifies the location of fire and explosion hazards, and indicates how these hazards are mitigated.

4.21 Flood Protection Report

The addition of the grain cleaning system does not require any changes to flood protection measures.

5.0 CLOSURE

We look forward to discussing these proposed measures with you at your earliest convenience. A project representative will be in touch to coordinate a meeting. Please feel free to contact the undersigned regarding any questions or further information that you may require.

Report prepared by:
Hemmera Envirochem Inc.

ORIGINAL SIGNED

Kim Milligan, M.Env.
Project Manager

Report prepared by:
Hemmera Envirochem Inc.

ORIGINAL SIGNED

Mark Milner, M.Eng., P.Eng.
Project Director, Atmospheric Sciences

Report reviewed by:
Hemmera Envirochem Inc.

ORIGINAL SIGNED

Michael Choi, B.Sc., P.Chem.
Business Leader, Physical Sciences

ATTACHMENT A

Project Description and Description of Operations

FRASER
GRAIN TERMINAL

PROJECT PERMIT AMENDMENT

Project Description & Description of Operations

Fraser Grain Terminal Project
VFPA Permit #15-041
June 26, 2020
FWS Job #09-20-001C
Revision 7

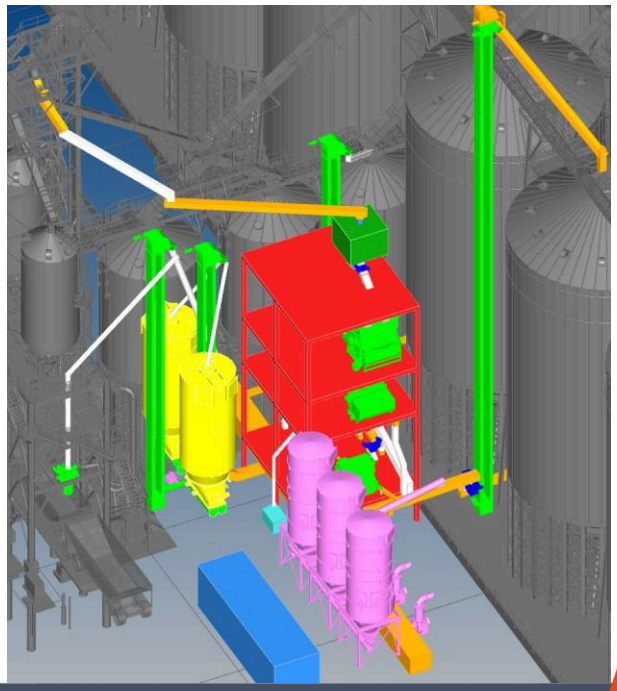

FWS THE CONFIDENCE BUILDERS

FWS GROUP OF COMPANIES

Fraser Grain Terminal Project Permit Amendment

Project Description & Description of Operations

TABLE OF CONTENTS

LIST OF FIGURES

0 – DISCLAIMER

This report is provided to Fraser Grain Terminal Ltd. (FGT) in relation to a permit application to Vancouver Fraser Port Authority ("VFPA") for the Project and any reliance by any other third party on this report shall be the responsibility of such third party. FWS assumes no liability with respect to any reliance by any such third party on this report.

1 - EXECUTIVE SUMMARY

Fraser Grain Terminal Ltd. (FGT) is currently constructing the Fraser Grain Export Terminal (Export Terminal) at Fraser Surrey Docks in Surrey, BC under VFPA Project Permit 15-041. The overall objective is to trans-ship a throughput capacity of 3.5million metric tonnes of grain annually, and 547,000 metric tonnes annually of canola meal pellets through an existing facility jointly operated by FGT and DPW-FS (JV Facility). FGT is requesting an amendment to their existing Project Permit, to include the addition of a grain cleaning system. This system is designed to meet export market requirements, while minimizing any impact to the local environment and neighbours. It is designed in accordance with the principles and concepts implemented for the main plant. The cleaning equipment is designed to handle over 50% of the incoming grain and up to 2.0M MTPY if commercial and seasonal requirements exist.

This report includes a detailed description of the project design criteria, proposed equipment and operations required ancillary systems, and construction schedule. Drawings referenced throughout this report are provided as separate digital files.

Design Impacts

The proposed cleaner system has been designed to minimize impacts to the local environment, and follows the guidelines outlined in the Project Permit. These design considerations include:

1) Location of Cleaner System;
    a. The Cleaner System is in a central area right next to the current steel bins under construction, thereby utilizing existing project storage and limiting additional handling equipment required.
    b. The fully enclosed grain cleaning equipment will be supported on a steel cleaner support structure. The structure will be designed to provide weather protection on the roof and 2 sides only while remaining open to the environment on the remaining sides, like the other grain handling equipment at the Export Terminal.
    c. There will be a requirement for additional steel support towers to accommodate additional conveyance equipment. The maximum height of the towers is shorter than, or at the same elevation, as the current large steel bins and existing catwalks. The additional storage bins, dust control systems and main cleaner support structure are all less than half the height of the existing bins and towers, so there would be no considerable visual impacts to neighbours.
    d. The Cleaner System is positioned on what is now an industrial developed site, so no clearing of land or changes to boundaries is required.
    e. No piles will be required to support the new steel towers, bents and cleaner support structure. The slab-on-grade foundation is supported by Rammed Aggregate Piers (RAP) like the main facility. No tunnels or pits are necessary, thus there will be minimal impact to existing underground contamination, and low risk for archeological disturbance. The small footprint of the cleaners, which are centralized in an area already designed for industrial equipment and foundations, will have a minimal impact on site drainage and stormwater pollution.

2) Operation of Cleaner System
    a. The Cleaner System shares the bucket elevator used for Container Loading. Operationally, this means that when the Cleaner System is being utilized, the Container Loading facility is not functioning to load containers for outbound traffic. We recognize that this operational limitation may need to be overcome at some point in the future when volumes are maximized.
    b. The dedicated Cleaner System dust control system will only operate when the Container Loading system is not operating, thus eliminating incremental noise and dust emissions from having both dust control systems operating simultaneously.
    c. In addition to the new cleaner equipment, there will also be a new Motor Control Centre (MCC) building included adjacent to the existing container loading MCC. The approximate footprint of the new MCC will be 10' wide x 40' long x 12' high (interior dimensions), and it will be a one storey building.
    d. The additional cleaner equipment and associated conveyances are all 75% smaller in motor size and conveyance capacity relative to the equipment and conveyances already on site. Because of the size/capacity of the new equipment and the sheltered location, there will a minimal impact on noise emissions to the surrounding neighbours.
    e. All grain cleaning equipment will function based on air (weight) and size separation, thus no additional water or chemical usage is required.
    f. Primary hours of operation are 12 hours a day (overnight) and 7 days a week operation 39 weeks per year. Cleaning may also occur during daytime hours on weekdays and weekends when commercial and seasonal conditions require which may extend operations up to 52 weeks per year, if necessary. Container loading will not be operational, reducing electrical load and truck traffic when grain cleaning occurs.
3) Cleaning System Components
    a. All grain will undergo primary cleaning in two stages, passing through a Scalper/Aspirator and a Vertical Drop Multi-Pass Cleaner (VDMC).
    b. Wheat will undergo secondary cleaning in an indent cylinder sizing machine, to remove any canola that is mixed with the wheat.
    c. Peas will undergo secondary cleaning in an air screening machine, to remove any split peas.
    d. Cleaned wheat and peas will be conveyed to storage using existing conveyances. Screenings will be stored temporarily in new screenings bins and reintroduced to the grain stream during shipping. Other cleaning by-products will be stored in separate new bins and loaded into trucks for sale or disposal through a new spout in the existing truck loading facility.
    e. Central baghouse filters and point source filters will remove dust from conveyances and cleaning equipment, to prevent buildup of explosive dust concentrations, and to control airborne dust. Collected dust will be reintroduced to the grain stream during shipping or included with screenings.

4) Impact on Site Services
    a. No water supply or sanitary sewer is needed for the addition of the cleaning system. All grain cleaning process are dry processes.
    b. No changes or additions are required to natural gas service, main electrical service, or storm sewer systems for the addition of the cleaning system.
    c. An upgrade is required to the existing switching station. Existing underground feeders will bring power into the site, and no additional cabling or excavation is required.
5) Building Code Considerations
    a. The cleaning system addition will not require fire separation or spatial separation from other parts of the facility. Sprinklers and standpipes are not required.
    b. Travel distances to exits will not exceed the approved limits for the main facility.
6) Construction
    a. It is estimated that this project will take approximately 6 months of construction onsite, starting in early fall of 2020.
    b. There would be some limited additional truck traffic during construction, however no overweight loads are expected. Three oversize loads, the modular MCC building and two welded steel bins will be shipped to site in one piece. Currently, these are anticipated to be a nominal 14' wide x 40' long x 14' high. This is all upland construction on an existing industrial site.
    c. FGT wishes to continue to utilize our contractors already mobilized on-site, who are familiar with the current project details and requirements.
    d. Our contractors will continue to follow the same design and installation practices already approved in the Construction Environmental Management Plan (CEMP).

2 - PROJECT DESCRIPTION

2.1 GENERAL SCOPE

2.1.1 Background

The design of the main FGT Export Terminal is based on incoming grain which is "export shipment ready" from facilities throughout the Western Canadian grain network. There are a few Western Canadian prairie grain terminals without cleaning operations, and in certain grain growing areas and seasons, products may be shipped to FGT without being cleaned to export quality standards. The Export Terminal is the last handling point in the export supply chain, so being equipped to clean is critical to consistently meeting export market requirements.

This proposed cleaner arrangement will be much smaller capacity than those currently found in other terminals in the Vancouver area, which are typically equipped with capacity to clean 100% of volumes handled. The proposed FGT cleaning project has been designed to provide capacity to clean over 50% of the total projected grain volumes described in the Project Permit. This cleaning system will be used to clean any products that may require additional cleaning to meet export standards, in only these upset conditions.

This is a conventional grain cleaning system using physical sizing (screens) and air (density) to remove the following:

- Dust
- Oversize or unthreshed grain
- Chaff, leaves, pods, heads, shells, etc. from primarily wheat, canola and peas
- Secondary cleaning system to either separate split peas from whole peas and/or canola from wheat that is mixed accidentally

2.1.2 General Description

The cleaning system is an internal handling step only, with no effect on incoming handling volumes for the Export Terminal. The Cleaning operation requires all incoming grain to be received and stored in the Facility bins, and then drawn from storage bins using the main facility conveyance system currently in place. A new two-way valve coming from the Container & Truck Loading bucket elevator is added, to allow product to be fed to the new cleaning system. This feed methodology means that during cleaning operations, feeding the container or truck grain loading system is not possible. Conversely, when loading containers or grain trucks, cleaning is not possible, thus limiting noise, traffic and air emissions due to the additional equipment.

In select cases where the container loading bin is fully pre-filled, a maximum of four (4) containers could be loaded during cleaning operations. If the truck grain loading bin is pre-filled, a maximum of only three (3) grain trucks could be loaded during cleaning operations. Grain trucks and screenings trucks share the same loading area so only one truck may be loaded at any time.

The Cleaning System is in a central area next to the steel bins currently under construction, thereby utilizing existing project storage and limiting additional handling equipment required. Fully enclosed grain cleaning equipment will be supported on a steel cleaner support structure e designed to provide weather protection on the roof and 2 sides

only, while remaining open to the environment on the remaining sides. This is similar to other grain handling equipment at the Export Terminal.

There will be additional steel support towers to accommodate additional conveyance equipment. The maximum height of the towers is at the same elevation, or shorter than, the current large steel bins and conveyor galleries. The additional screenings storage bins, dust control systems and main cleaner support structure are all less than half the height of the existing bins and towers, so there would be minimal visual impacts to neighbours.

Operation of the cleaning system which is primarily an internal handling step, will occur primarily, but not limited to night shifts and weekends, and only when cleaning is necessary. Note all flow rates and capacities referenced in this report are based on Wheat at bulk density of 768 kg/m3 (48 lbs/cubic foot).

FIGURE 1 – ANNUAL THROUGHPUT OF CLEANING SYSTEM (based on Wheat, Canola and Peas)

GRAIN CLEANING EQUIPMENT ANNUAL VOLUME		
Design Incoming Total Annual Volume for Grain Cleaning	3,500,000	MTPY
Clean Grain	1,754,000	MTPY
Oversize to Waste - (Average 0.2%)	3,500	MTPY
Total Liftings/Screenings (Average 2%)	35,000	MTPY
Liftings/Screenings/Dust* - Shipped by Truck (Nominally 50% of Total Liftings/Screenings)	20,580	MTPY
Liftings/Screenings/Dust* - Blended to clean grain and shipped via OGV (Nominally 50% of Total Liftings/Screenings)	20,580	MTPY
**Dust Filter Efficiency (99.990%)*		

2.1.2.1 Grain Cleaning Operations

There is a Primary cleaning system and Secondary (Reclaim) system at this facility. All cleaned grain must pass through the Primary system consisting of four (4) machines. In cases where there is a by-product that can be separated (reclaimed) from the clean stream, one of the two reclaim cleaning machines will be used in series. See the Process Flow shown on FWS Drawing F001.

The Secondary system will be used rarely, and only when the following conditions exist:

- Good quality Wheat and Canola are admixed together, or
- Split peas must be separated from whole peas to meet export standards

The Primary cleaning system will create 4 streams of products:

- Clean Grain for storage and shipping
- Oversize (large foreign material, stones, wood, plant stalks, etc.)
- Dust (fines)
- Screenings (grain by-products)

Anticipated annual volumes of products are shown in Figure 2. Clean grain will be stored in facility bins, to be ready for shipping through the FGT shipping systems.

Oversize products are collected into a small dumpster and disposed of in accordance with local regulations.

Dust is a small fraction of the flow, and is re-introduced into clean grain stream, like the main plant operation.

Screenings will be stored for blending into "overclean" grain and shipped via Ocean Going Vessel (OGV) to meet acceptable export levels, or via truck (primarily Super-B grain trailers) to the local feed market for animal consumption.

The Secondary (Reclaim) cleaning system will create 3 streams of products:

- Clean Grain for storage and shipping through main facility
- Dust (fines) to be introduced into clean grain stream.
- By-products (Either clean canola or split peas) to be stored and shipped through main facility

FIGURE 2 – ANNUAL VOLUME OF PRIMARY AND SECONDARY CLEANING PRODUCTS

TOTAL ANNUAL VOLUME BY PRODUCT		
Total Annual Design Volume for Grain Cleaning	1,754,000	MTPY
PRIMARY CLEANING		
Wheat - 40%	701,600	MTPY
Canola - 40%	701,600	MTPY
Peas - 20%	350,800	MTPY
SECONDARY CLEANING		
Wheat/Canola Separation - 50%	350,800	MTPY
Split Peas/Whole Peas - 75%	263,100	MTPY

Other grains such as barley, oats, soybeans and lentils may also be cleaned through this system, if required as part of the overall annual cleaning capacity.

2.1.2.2 Description of Facilities

The Cleaning System will consist of the following:

1. Concrete foundation supported on Rammed Aggregate Piers (RAP), to match the existing facility bin storage slab
2. Enclosed conveyance system throughout using belt conveyors, screw conveyors, drag conveyors and bucket elevators.
3. Enclosed cleaning equipment, with dust control systems to minimize fugitive dust
4. A three-level steel grain cleaner support structure. This structure is not fully enclosed, but does have weather and noise protection on two sides as the existing bins provide additional protection.
5. Two nominal 4200 cubic foot screenings storage bins.
6. Three additional grade-mounted baghouse dust control systems:
    a. Two for Primary cleaners
    b. One for Secondary cleaners (only operates with the air screening machine)
7. One point source dust collector for Screenings equipment.
8. One point source dust collector for By-product equipment.
9. The cleaning system will be operated from the main control system with no operators in the cleaning support structure, except for routine inspections.
10. Retractable dust control loadout spout for loading screenings to trucks.
11. Stair and ladder access into the cleaning support structure.
12. A single new modular Motor Control Centre (MCC) building to hold new switchgear.
13. Additional switching station module and transformer for high voltage power.

2.1.2.3 Special Remarks

Several site-specific geotechnical investigations have been performed on the site, to characterize the soil for construction and liquefaction effects during a seismic event. The proposed grain export facility and cleaning system shall be constructed to meet Canadian National Building Code (NBC) 2015. To conform with the seismic design requirements, a ground improvement program is required to deal with effects of liquefaction. The proposed method of ground improvement in various areas is to use Rammed Aggregate Piers (RAP).

The main cleaning support structure slab on grade will be located with approximately half the slab area over the in-situ contaminated groundwater area. This ground area shall be improved using a system of RAPs to reduce liquefaction spread and improve bearing capacity. A series of grout filled RAPs, installed on the west perimeter of

the main FGT facility densified area, is already in place to minimize the potential movement of the existing groundwater plumes. Within this grouted perimeter berm, un-grouted RAPs will be installed to provide the balance of ground improvements.

To densify the new cleaning structure foundation, the existing Bekaert building slab, foundations, and rail spur were previously removed, and replaced with clean fill. No crushed concrete is in this area from the main facility.

Any excavated material required to be cut or excavated, shall be tested and stored on site. Clean material shall be re-used on site where possible or hauled off site. Contaminated materials shall be handled according to the CEMP.

2.1.3 Project Components

2.1.3.1 Primary Cleaning– First Stage

Grain to be cleaned is stored in the main plant storage bins and conveyed using the enclosed belt conveyor and bucket elevator system to the Container Loading Leg. A two-way diverter valve is installed to send grain via a small enclosed belt conveyor and surge bin mounted on the exterior above the Cleaner support structure roof. From the surge bin, grain is metered to two lines of Primary Cleaning equipment. There are 2 stages to the Primary Cleaning System, with the first being a Scalper/Aspirator and the second a Vertical Drop Multi-Clean Aspirator (VDMC)

The first stage of the Primary cleaning system will create 4 streams of products:

- Clean Grain for storage and shipping
- Scalpings Discharge or Oversize (large foreign material)
- Liftings (Light) or Dust (fines)
- Liftings (Heavy) or Screenings (grain by-products)

The operation of a Scalper/Aspirator is shown in Figure 3. This machine uses a mechanical wheel to “scalp” or brush large material into the Scalpings/Oversize stream. A screen on the scalping reel provides physical size separation of large from small particles, and air is used to separate lighter product from Clean Grain. Liftings are then separated further in the same machine, using air settling techniques to separate Heavy Liftings/Screenings from Light Liftings/Dust. Screenings are mechanically conveyed to a storage system. Dust is collected by the baghouse system and reintroduced back into the clean grain or screenings stream using enclosed mechanical conveying.

The capacity of each conveying system is significantly smaller than the main plant capacities. In the cleaning system, the maximum conveying capacity is 500 MTPH compared to 2000 MTH of the Export Terminal.

Anticipated annual volumes of products are shown in Figure 2.

FIGURE 3 – TYPICAL CLEANING OPERATION OF SCALPER/ASPIRATOR

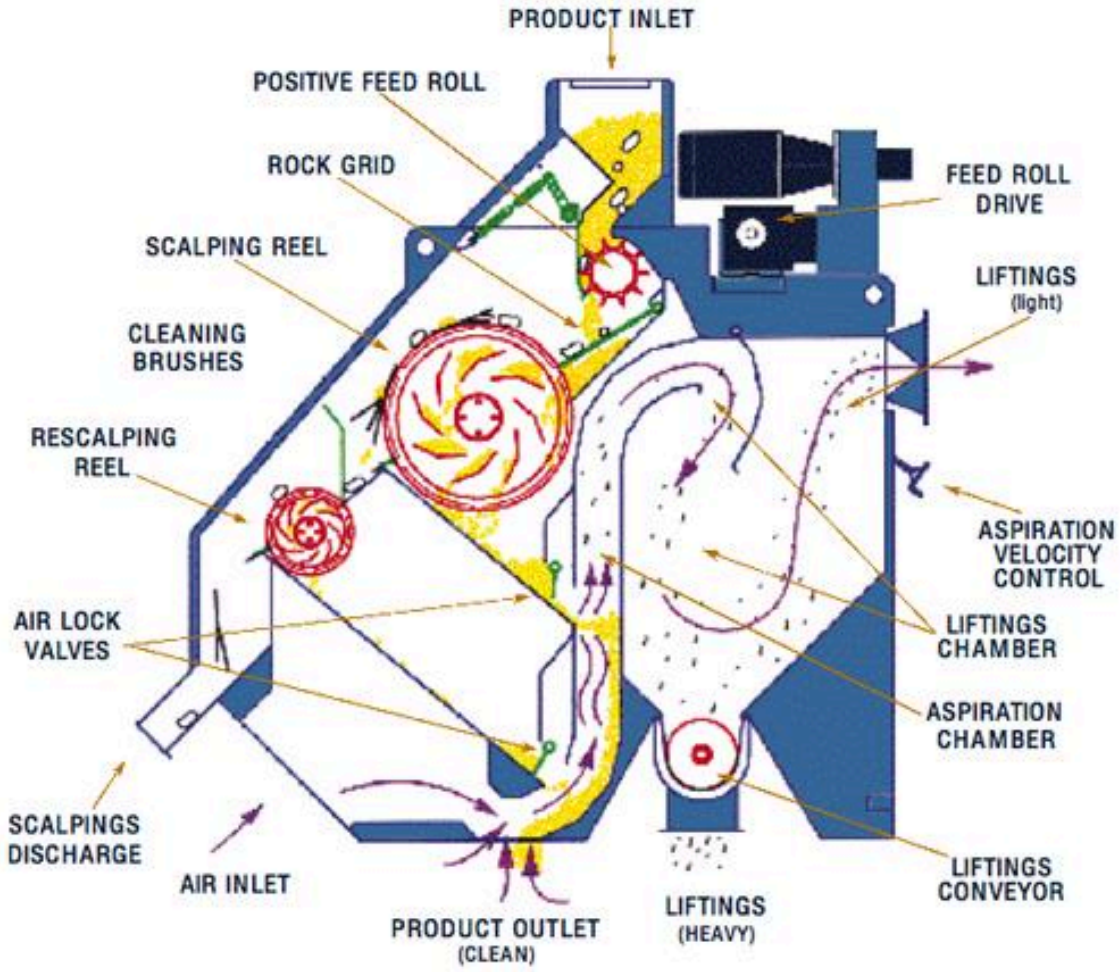

2.1.3.2 Primary Cleaning – Second Stage

The Screenings or Heavy liftings can carry good saleable product to be recovered during the second stage of the Primary Cleaning, using a Vertical Drop Multi-Pass Cleaner (VDMC). The VDMC uses air forced upwards through a downward flowing stream of grain, to separate lighter material from heavier good quality grain.

Clean grain is mechanically conveyed back to the Export terminal system for storage and shipping.

Screenings or Liftings are mechanically conveyed back to the Screenings storage system for blending or shipping.

Dust is captured by a baghouse system shared with the First Stage of Primary cleaning system and re-introduced into the clean grain or screenings stream.

The VDMC is a small cleaning machine, designed to process nominally 25 MTPH of product.

FIGURE 4 – TYPICAL CLEANING OPERATION OF VDMC

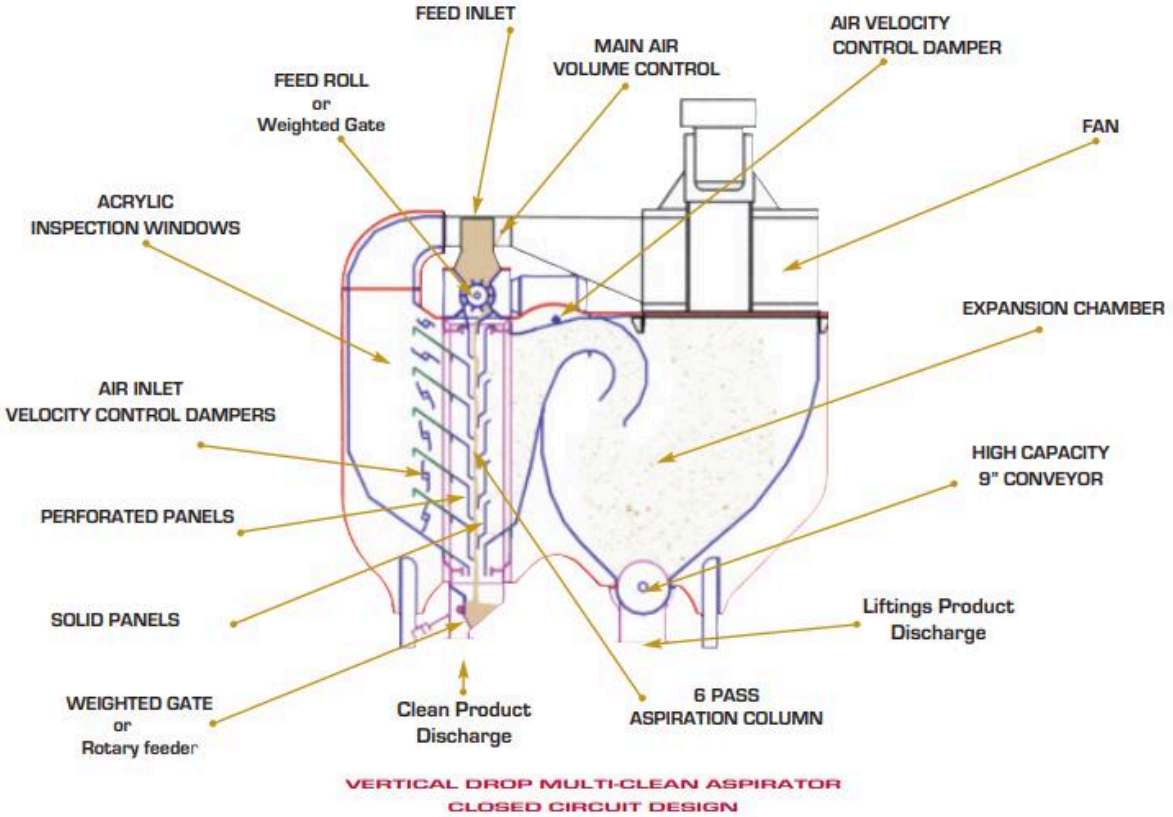

2.1.3.3 Secondary Cleaning – Wheat/Canola Admixture Separation

The Secondary cleaning system includes two separate machines to be used only for specialized applications. During Cleaning Operation, the Primary Cleaning System will always be used and when necessary, only one of the secondary cleaning machines can be used at any one time.

In rare circumstances, good quality wheat and canola can be mixed together, and a step is needed to separate wheat from canola by size. This separation will use a Sizing Machine with multiple indent cylinders to separate wheat from canola whose grains vary greatly in size. Dust is removed from the grain in the Primary cleaning process, so there is no dust collected in the Secondary Cleaning process. The movement of grain through the machine is slow and gentle for the grain sizing process to be effective.

Wheat will be mechanically conveyed back to existing storage using the clean grain system.

Canola will be mechanically conveyed back to one existing storage using the by-product system.

The capacity of each conveying system is significantly smaller than the main plant capacities. In the cleaning system, the maximum conveying capacity is 25 MTPH compared to 2000 MTH of the Export Terminal.

FIGURE 5 – GRAIN FLOW OF SIZING MACHINE

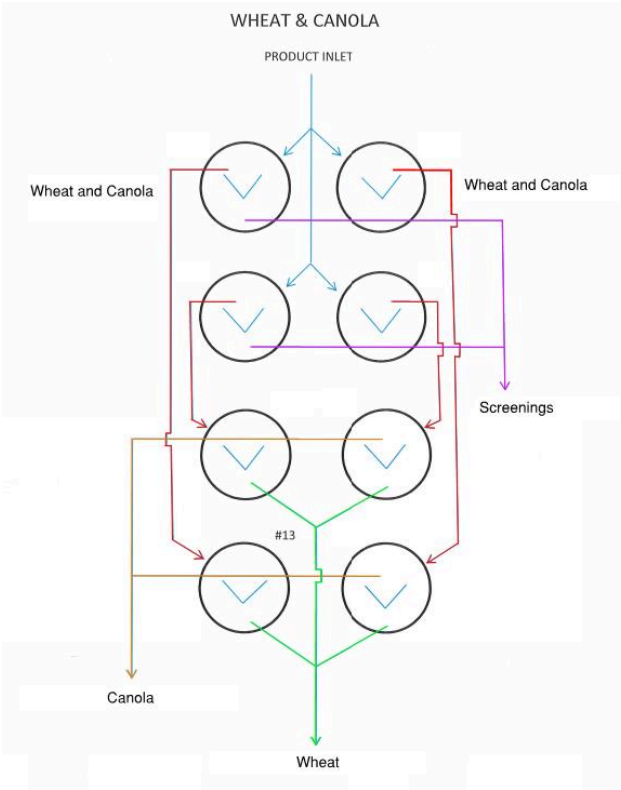

FIGURE 6 – SIZING CYLINDER SEPARATION

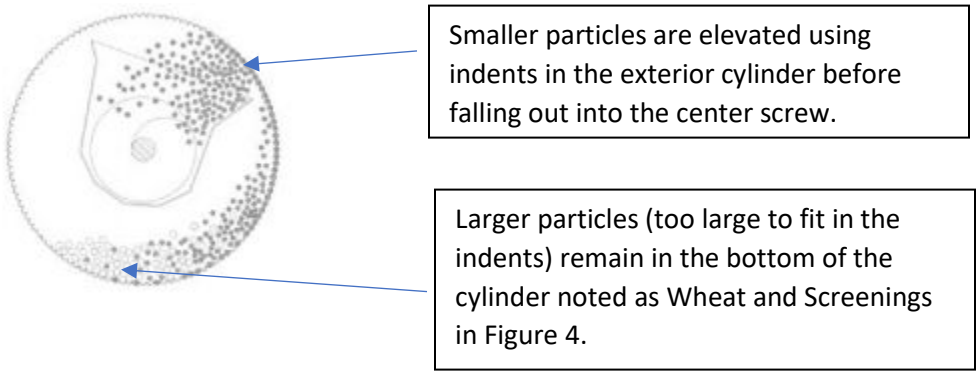

2.1.3.4 Secondary Cleaning – Split Pea/Whole Pea Separation

Export standards for peas allow only a certain amount of split peas as a fraction of whole peas. Peas are fragile and can split during shipping and handling from farm to Export Terminal. A small air screening machine will be used, when split pea counts are near or above export standards. This machine uses vibratory sieves and some air to separate split peas from whole peas. Dust is removed from the grain in the Primary cleaning process, so there is virtually no dust collected in Secondary Cleaning. The movement of grain through the machine is slow and gentle for the grain sizing process to be effective.

Whole peas will be mechanically conveyed back to existing storage using the clean grain system.

Split peas will be mechanically conveyed back to existing storage using the by-product system.

The capacity of each conveying system is significantly smaller than the main plant capacities. In the cleaning system, the maximum conveying capacity is 25 MTPH compared to 2000 MTH of the Export Terminal.

FIGURE 7 – TYPICAL LAYOUT OF AIR SCREENING MACHINE

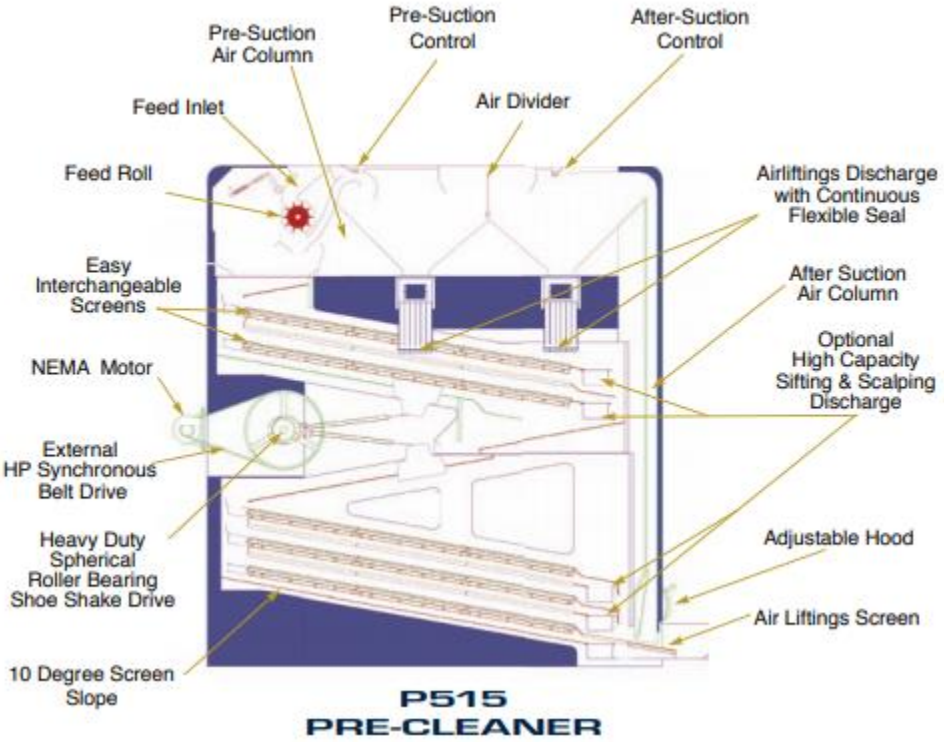

2.1.3.5 Cleaning Support Structure

The Cleaning Equipment Support Structure will be located near the center of the facility and will support each stage of cleaning on a different level. The structure will be constructed using galvanized structural steel members and bar grate walking areas. The structure is nominally 40' wide x 40' long x 80' tall.

The roof will support conveyances for incoming grain to be cleaned and provide maintenance access at this level. A solid steel roof will provide weather protection for the lower equipment. The internal three floors of the structure shall be bar grating. The North and East walls shall be clad with preformed metal painted cladding to provide weather protection. The adjacent bins on the South and West sides provide shelter which will minimize weather effects there. The bottom floor is elevated approximately 12' above the concrete surface to provide access to reclaim equipment and is open for easy clean-up.

The Cleaning support structure shall have main steel members galvanized, with gray walls to blend in with the rest of the facility. Exterior stairs shall be provided for access to the various floors of the cleaner support structure and for emergency egress. Ladders and rest platforms shall be provided to other locations only requiring maintenance access like bucket elevator heads.

2.1.3.6 Screenings Storage and Loadout

Screenings with the fine dust removed will be temporarily stored in two nominal 4200 cubic foot, welded steel bins on the concrete slab. The bins will nominally provide storage for 10 hours of cleaning. From these bins, screenings will be conveyed on plant belt conveyors to blend into "overclean" grain destined to meet export standards or loaded out to truck for animal feed consumption.

Truck loading will use a retractable dust control loading spout to fill trucks, within the existing loadout tower on the site. The retractable loading spout will be extended when filling, to minimize drop height, and will auto-retract as filling occurs. The truck filling will be monitored via CCTV and controlled by an operator in the existing Truck Loading Booth, located in the loading tower, or the main control building

Semi trucks hauling conventional covered, super-B grain trailers will be loaded with screenings, on the existing truck scale. Capacity of the loading spout is nominally 100 MTPH.

2.1.3.7 Motor Control Centre (MCC) Building

A single 10' wide x 40' long x 12' high (interior dimensions) modular MCC building will be installed on the new concrete foundation. The building will have metal cladding which matches the colour scheme and details of the buildings on site. This MCC building will have its own HVAC system and heat detection, connected to the central plant alarm system.

2.1.3.8 Dust Control

2.1.3.8.1 Dust Control Strategy

Applicable NFPA standards will be followed in the management of combustible dust. Please refer to the Fire and

Explosion Plan section details.

The mitigation strategies used on this Project to minimize risks of fires and explosions will include the following:

- All material handling equipment will be totally enclosed
- Provision of explosion-isolation screws below each screenings bin
- Installation of special dust control loading spout on the truck loading station
- Provision of bag or cartridge type air filters, with aspiration fans connected to each conveyor, leg, and most cleaners. Fans create negative pressure inside the equipment plenum to eliminate dust emission.
- Dust accumulated in the cartridge filters in the form of dust lumps will be returned immediately to the product flow.

Baghouse filters with fans will have 99.990% efficient filter media (10 mg/m3 output). Point source filters will have 99.999% efficient filter media (5mg/m3 output).

See FWS Drawing F002 for a schematic of the dust control system.

2.1.3.8.2 Training of Personnel

FGT will develop a training plan for workers to include the following:

- Fire and dust explosion hazards
- Control of ignition sources
- Housekeeping

2.1.3.9 Civil Services

There are no new underground or civil services needed for this expansion.

2.1.3.9.1 Water Supply

No water supply is needed for this cleaning system. No sprinkler system is required for this open cleaner support structure, similar to the existing plant equipment.

2.1.3.9.2 Sanitary Sewer

No sanitary sewer is required for the cleaners. Operators controlling the cleaner system from the current main control building have access to washrooms in the main control building.

2.1.3.9.3 Storm Sewer

There are no changes to the storm sewer system installed for the Export Terminal.

2.1.3.9.4 Natural Gas

There is no natural gas needed for the new process.

2.1.3.9.5 Electrical Service

The 25 kV line installed to service the Export Terminal is adequate to support the new loads of the cleaner system. The cleaner system will also generally primarily operate during nights and weekends, where there is also lower power demand on the surrounding grid.

2.1.4 LAND

2.1.4.1 Summary of Land Area Affected by the Project

No new land lease changes are needed as the cleaners are placed within the FGT lease area.

2.2 PROJECT SITE

2.2.1 General Description of the Land

The cleaner system will be installed within a recently developed industrial footprint that is still undergoing construction. The structures and equipment will be placed at grade adjacent to the existing on-site roadway. The proposed area to be developed is nominally 65' wide x 110' long.

FIGURE 8 – PROPOSED CLEANER LOCATION ON PLANT SITE

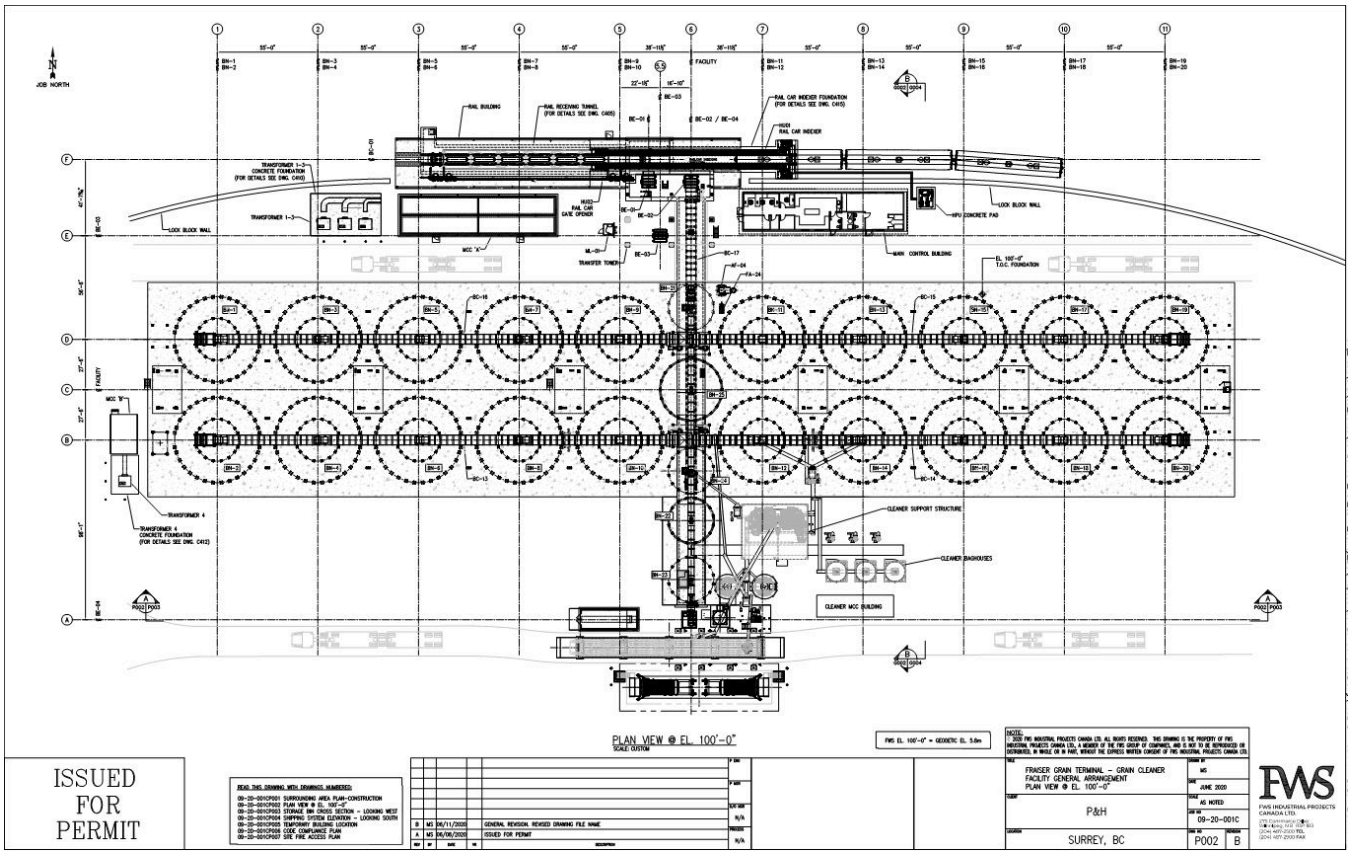

2.2.2 Environmental Issues

There are no excavations needed for this installation, and the foundation will be supported by a Rammed Aggregate Pier (RAP) grid, similar to those installed under the current facility. The RAP system will be installed in accordance with the Construction Environmental Management Plan (CEMP) currently in force on the site, which includes this method of ground improvement.

2.3 FACILITY DESIGN CRITERIA

2.3.1 Total Annual Capacity

Total Annual Export Terminal Throughput 4.0M MTPY

JV Shed 1 Volume (not to be cleaned) = 0.5M MTPY

Total Annual Volume (not including JV Shed 1) = 3.5M MTPY

Design Cleaning Capacity = nominally 50% of total annual capacity (Not including JV Shed 1) = 1.75M

MTPY but could clean over 2.0M MTPY if commercial and seasonal conditions require.

Nominal Rated Cleaning Capacity = 500 MTPH

2.3.2 Cleaning System Operating Hours

Design Operating hours = 12 hours per night on weekdays & 20 hours per day on weekends, but may vary with commercial and seasonal conditions

12 hrs x 5 days + 20 hours per day x 2 days = 100 hours per week.

Total Design Operating hours per year = 3507 hours per year

Average weeks of Cleaner operation annually = (3507 hours per year/100 hours per week) X 1.10 (10% operational efficiency) = 39 weeks per year or 273 days/year and up to 52 weeks per year if commercial and seasonal conditions require.

2.3.3 Products to be Cleaned

Wheat, Canola, Peas

Other grains such as barley, oats, soybeans and lentils may also be cleaned through this system, if required

Screenings Handling

- 50% Blended to Ocean Going Vessels (OGV)
- 50% Shipped to local market via bulk truck

2.3.4 Screenings

Storage volume: One (1) – 10-hour operating time

Truck sizes – 25 MT per truck

Loading Capacity: 100 MTPH

Average Truck Traffic per day – 5 trucks per weekday, 10 trucks per day on weekends

Peak Truck Traffic per day – 6 trucks per weekday, 12 trucks per day on weekends

2.3.5 Structural Steel

Structural steel support structures on a concrete foundation were selected to reduce the overall weight of the facility in a seismic event. The finished appearance is designed to blend in with the existing facility.

2.3.6 Dust System

At Fraser Grain Terminal, dust emissions will be controlled by enclosing all conveying equipment and all grain cleaners. Dust control and filtering is provided at critical points.

All conveying equipment associated with the cleaning system is totally enclosed. Grain flow will only be exposed to the environment, with the potential for dust emission, at the Screenings loadout spout discharge.

A Special retractable dust control spout will be used to reduce fugitive dust emissions at this point.

See separate Dust Hazard Analysis report for further information on the dust control system.

2.3.7 Truck Screening Loading System

The truck screening loading system shall be a common system located in a shared bay of the truck loading structure. This allows a single operator in either of the control buildings to load bulk trucks with screenings or grain, through dedicated spouts for each. Grain trucks and screenings trucks share the same loading area so only one truck may be loaded at any time.

The truck screenings loading system will be a semi-automated arrangement utilizing a telescoping dust control spout. This type of dust control device uses a dedicated set of dust control filters to collect dust and re-introduce lumps of dust back to the product stream. The retractable spout will be lowered to the bottom of the truck box, and then will auto-retract as the truck fills. This system uses a sensor and flexible dust baffles, to minimize dust emissions between the bottom of the newly formed dust pile and spout discharge. See Figure 9.

FIGURE 9 – TYPICAL OPEN VEHICLE DUST CONTROL SPOUT

2.3.8 Fire Protection

Please refer to the Fire and Explosion Plan for details of fire protection provisions.

As outlined in the Fire and Explosion Plan, the main facility and cleaning control system shall be monitored by the PLC control system and hazard monitoring devices. These devices shall provide notification of any issue to the operators in the control room.

The current perimeter fire hydrant loop located around the facility provides water supply to local Fire Departments, if needed to fight fires on site. The current roadway provides access to the cleaner equipment on the site.

2.3.9 Electrical System

Electrical components will be selected in the detailed design phase, for continuous heavy-duty operation and with regard for operating and environmental conditions. Electrical components will comply with applicable codes and standards.

The following standards will be followed:

- CSA C22.1 Safety Standards for Electrical Installations
- CEMA (Conveyor Equipment Manufacturer's Association) standards

Electrical Hazardous Area Classifications

#	AREA	CLASSIFICATION	TYPE OF EQUIPMENT TO BE USED
1	Inside Material Handling Equipment - Inside conveyor casings - Inside Bucket Elevator casings - Inside cleaning equipment - Inside spouting	Zone 20	Class II, Division 1, Group G
2	Other areas Outdoors Within Cleaner Support Structure	Outdoors	NEMA 4X

2.3.10 Codes, Standards and Classification

The grain cleaning area is included in the special and unusual structure of the grain elevator. As such, the grain cleaning area does not require fire separations from other parts of the grain elevator, and sprinklers are not required. The location of the grain cleaning equipment slightly enlarges the area of the special and unusual

structure, but existing separation from other structure is sufficient that no exterior rated fire separation is required. The design will ensure that travel distances to exits do not exceed the approved limits for the existing facility.

2.3.11 Power Distribution

The current switching station will be expanded to add one additional switching section and re-use existing underground feeders to supply an upgraded dry mount transformer FWS Drawing P002.

Including the cleaner system addition Fraser Grain Terminal's main electrical load characteristics will be approximately:

- Connected load: under 5,500 hp
- Maximum demand: 4.52 MVA

The cleaner system will require one separate Motor Control Centre (MCC) located at grade near the cleaner system. The power supply will come from a distribution panel in MCC B next to the upgraded transformer and will run above grade supported by existing bins to feed this MCC system.

The new MCC, located adjacent to the cleaner support structure, will be a pre-engineered modular steel building, constructed off site. Generally, the MCC shall house:

- Motor control centres (low and medium voltage)
- I/O racks for the PLC control equipment
- Lighting distribution equipment
- Special controllers (cleaning equipment speeds)

2.3.12 Lighting

To minimize the effect of the FGT lighting system on surrounding areas, the following measures are included in the lighting design:

- Outdoor fixtures are LED type, allowing better control of light distribution, plus power savings
- Lighting in the cleaner support structure will only be at full brightness when required for repair or inspection.
- Lighting within the cleaner support structure will also be contained in the area by the roof, the two cladded walls and the existing steel storage bins.

Emergency lighting will be provided as required by code, utilizing separate battery powered lights, or single fixtures with internal fixtures providing both regular and emergency lighting.

Please refer to COMCO drawings 10022-L01 to L09 in Project Permit 15-041 for proposed lighting levels and layout for the main facility permit 15-041. Final layout of lighting for the cleaner equipment will follow similar guidelines.

2.4 OPERATIONS

2.4.1 Truck Traffic

The FGT Project Description & Description of Operations Figure 22, submitted as part of the original Project Permit 15-041, shows a combined daily truck traffic of 98 trucks, including all bulk, containers (empty and full) for FGT based on truck operations 253 days/year.

The cleaner system is projected to operate an additional 20 days per year for a total of 273 days per year. On weekdays, total combined truck traffic will increase by a 3-5 trucks from 98 trucks to 103 trucks/day, a 5% increase in average daily truck traffic. This slight increase has minimal effect on annual traffic volumes and will not significantly affect the results of the traffic level of service from the initial project permit.

2.4.2 Hours of Operation

Hours of Operation of the cleaner system will range from 8 to 24 hours per day, depending on needs for cleaning. Cleaning will ideally happen when loading Ocean Going Vessels (OGVs) 24 hours per day, to facilitate blending and shift schedules for employees. Should cleaning occur on weekdays container loading will not be possible thus reducing electrical load, dust emissions and noise as well as truck and container handling equipment.

2.4.3 Parking and Expected Changes to Employment

No new employees are required because of the addition of this equipment. No changes are required to parking onsite.

2.5 DESCRIPTION OF OPERATIONS

2.5.1 Grain Staging and Feeding

When not loading containers, the existing container loading bucket elevator will send grain via a conveyor to a small surge bin to feed the cleaners. The upper conveyor will be aspirated by the new primary cleaning dust system.

The small surge bin provides flow control to evenly feed the primary cleaning system and it will be aspirated through the upper conveyor.

2.5.2 Grain Primary Cleaning

Grain to be cleaned will discharge via gravity from the surge bin to a modulating 2-way valve, to feed both Primary cleaning systems. Grain will discharge via gravity to the next level of cleaning, and ultimately to the collection conveyance system to clean grain storage. From clean grain storage, grain may be shipped to OGV or containers.

From each of the primary cleaning machines, dust is collected in two dedicated baghouse systems and is mechanically conveyed back into the clean stream or conveyed to screenings storage.

2.5.3 Grain Secondary Cleaning - Reclaim

In special cases where wheat and canola are mixed together, a further sizing step is needed. Clean grain with the dust and some screenings removed, is diverted via an enclosed conveyor to a sizing machine. This sizing machine will send wheat to the clean grain system and reclaimed canola will be conveyed to an existing storage bin.

The by-product stream will be aspirated by the main cleaner system and any dust will be discharged to the clean grain stream.

In special cases where split peas need to be removed from whole peas to meet export quality grades, clean peas with the dust and some screenings removed, are diverted via an enclosed conveyor to an air screening machine. The air screening machine uses sifting action and aspiration to separate whole peas from split peas. This air screening machine will send whole peas to the clean grain system and reclaimed split peas will be conveyed to an existing storage bin.

The by-product stream will be aspirated by the main cleaner system, and any dust will be discharged to the clean grain stream or to the screenings stream. The air screening machine will have its own small baghouse collection system that will also convey any dust to the clean grain stream or to the screenings stream.

2.5.4 Screenings Storage and Loading

Screenings will be conveyed mechanically to two welded smooth wall storage bins, fitted with special steep hopper discharges and twin-screw conveyor unloaders. Only one bin will be filled at time during cleaning. The other bin will be emptied to either blend into the shipping stream through the Export Terminal, or to load out to trucks.

The truck loading operation is controlled by the operator in the either of the two existing control rooms. Blending is controlled by the main control room operator.

Dust from the screenings equipment system is collected and re-introduced to the Screenings leg or blending conveyor via two-way valve.

2.6. FIRE AND LIFE SAFETY DESIGN

2.6.1 General Design Considerations

FGT will be designed to employ the best available material handling technology for agricultural products, and to follow best engineering practices where code requirements are not specific or not applicable.

Please refer to the Fire and Explosion Plan for details of fire and explosion prevention and mitigation strategies for the main plant. The cleaners will utilize the same fire access roads and hydrants already on site for firefighting.

Stairs are provided for primary egress from the cleaner support structure and this is not an occupied space during normal operations.

2.6.2 Buildings

Other than the MCC building, all equipment is enclosed and exposed to the elements. This minimizes areas where potential dust laden air can accumulate.

2.7 PROPOSED CONSTRUCTION PERIOD

2.7.1 Construction Schedule

The construction schedule is based on a 6-month period starting in the last 3 months of the current Export Terminal construction. Target start date is early Fall 2020, with completion in early Spring 2021.

2.7.2 Construction Equipment Requirements

Skid steer Loader – 2 months

5 T Excavator – 1 month

Telescoping forklift – 6 months

Concrete trucks – 1 week

200-ton truck crane – 3 months

30-ton boom truck crane – 4 months

Straight boom lifts – 2 units – 3 months

End dump trucks – 4 units – 1 month

Small hand tools, welders – 6 months

2.7.3 Construction Traffic Volumes

Based on the construction duration, FWS has developed a conceptual estimate of construction traffic volumes for the project.

Delivery trucks

- Total Work days – 6 days/week x 4 weeks/month x 6 months = 144 work days
- Average trucks /day = 4 trucks/day

There will be special circumstances, primarily during the one foundation concrete pour, where there will be a peak of truck traffic on singular days which could be very heavy. Maximum number of trucks per day = 40 trucks.

In addition to delivery trucks, there will be worker vehicles driving onto the FGT site. A parking area has been provided for worker vehicles in the FWS drawings. The conceptual estimate for worker vehicles is based on a vehicle occupancy of 1.5 people per vehicle.

Average Attendance = 20 people

Average vehicles = 13 vehicles

Peak Attendance = 40 people (approx. 2x average day attendance)

Peak vehicles = 26 vehicles

Access on site for construction vehicles shall be on the roadways constructed with crossing slabs over underground utilities. No overweight loads are expected for the construction of this addition. Three oversize loads, the modular MCC building and two welded steel bins will be shipped to site in one piece. Currently, these are anticipated to be a nominal 14' wide x 40' long x 14' high.

3 – ADDITIONAL SUPPORTING INFORMATION

3.1 Geotechnical Report

The grain cleaning addition falls within the area which is addressed by the geotechnical report prepared for the main project permit 15-041 by GeoPacific Consultants Ltd., titled "Geotechnical Report for Proposed Fraser Grain Terminal, Fraser Surrey Docks, Surrey, B.C.", and dated March 29, 2018.

The design of the grain cleaning addition is in accordance with the recommendations of this report.

3.2 Energy Efficiency

The design of this facility will follow National Energy Code requirements as outlined in the Project Permit 15-041. LED lighting and premium efficiency motors shall be used for process equipment.

Total horsepower (hp) of main plant per original permit: under 5000 hp

Total revised hp of main plant plus proposed cleaning addition: under 5500 hp (10 % increase)

Total anticipated power demand, per original permit: 4.12 MVA

Total revised anticipated power demand of main plan plus proposed cleaning addition: 4.52 MVA (9.7 % increase)

Most of the grain cleaning is anticipated to occur primarily, but not limited to, nights and weekends. As most other businesses in the vicinity have reduced power consumption at that time, the impact is expected to be negligible.

The additional load in off-peak hours will be beneficial to BC Hydro in keeping the power demand and line voltage stable. The Cleaners may alternatively be run in the daytime, as required, and is not expected to create a significant additional demand as the container loading area will be shut down to offset the operations.

3.3 BATNEC (Best Available Technology at Not Excessive Cost) Assessment

The purpose of the addition of this grain cleaning equipment to Fraser Grain Terminal is to reduce the environmental footprint of cleaning grain for shipping at this facility. The design aims to:

- Reduce fuel emissions from rail and truck transport.
- Utilize existing equipment already onsite.
- Reduce the amount of people required to control and maintain the equipment during operation.

Although the grain coming to the facility will be mostly cleaned at Western Canadian prairie grain terminals, to

reduce hauling screenings and dust via rail to FGT. There are reasons including, seasonal conditions, grain rail loading timing, off-spec product or blended product is shipped from Western Canadian prairie grain terminals that does not meet export standards and requires cleaning prior to loading an OGV. By adding cleaners to the FGT facility footprint, it also reduces the need to ship dirty grain locally to another elevator to be cleaned, then shipped again via truck or rail back to FGT for loading a ship. The location of the cleaner system was selected because this is the last opportunity to clean grain prior to shipping overseas. Cleaning at a remote location is not feasible and would increase truck and/or rail emissions by shipping cleaned grain and screenings and/or dust between facilities.

The proposed cleaning systems are proven in the industry. This minimizes the overall footprint, electrical demand and potential noise for the system.

The cleaning process, although simple, can incorporate multiple pieces of equipment and separate systems. This system achieves the necessary cleaning using the least amount of process equipment, compared to other cleaning systems using more screens and rotating equipment evaluated for this project. Here, FGT is re-purposing existing equipment and storage bins to be used for cleaning, when needed. This minimizes construction costs, emissions and overall power consumption. The arrangement of the cleaners in a vertical orientation reduces the number of bucket elevators and/or conveyors to re-elevate the product.

The operation of the cleaners is planned primarily for off peak times (nights and weekend) to minimize the peak demand on the facility and effect on neighbors, unless daytime cleaning is required to meet vessel loading timing.

These grain cleaning machines are state-of-the art using simple controls and no additional operational staff to operate the cleaning equipment. The primary cleaning system is designed to handle multiple commodities with changes to airflow only which are easily controlled remotely or on the outside of the machine and minimize vibration and screen changes, in comparison to other cleaning systems. In comparison to other grain cleaning solutions, this solution has fewer motors, and smaller overall footprint. Due to the large air volumes drawn from the machine and grain flow, fugitive dust is minimized in the first two cleaning steps. By using air in the initial cleaning step, the explosion risk is reduced very early in the process. The re-introduction of the dust back into the clean grain stream or into the screenings stream also minimizes the handling requirements and dust generation.

Other possibilities for handling screenings and dust can include making pellets for animal feed. This is an energy intensive process that also creates significant noise in comparison to the small volume, fully enclosed equipment planned for this operation.

3.4 Fire & Explosion Plan Report

This will be issued as separate document.

3. 5 Preliminary Dust Hazard Analysis Report

This will be issued as separate document.

4 - DRAWING REQUIREMENTS

4.1 Site Location

See FWS Drawing P001 for site location in the general area.

4.2 Site Plan

See FWS Drawing P002.

4.3 Buildings, Structures and Equipment

See FWS Drawing P003 and P004.

4.4 Lot Grading, Drainage, Storm Water Management and Utilities

All underground utilities and drainage remain unchanged. See ISL Drawing (TBD) to see updated calculations on Stormwater pervious vs. impervious area

4.5 Parking and Access

No changes to parking and access are required from Permit 15-041.

4.6 Construction Laydown Areas

See FWS Drawing P005.

5 - REFERENCES

Images of Cleaners – www.Carter-Day.com

ATTACHMENT B

Drawings – FWS General Arrangement

Project Number 09-20-001C 6/24/2020 PERMIT DRAWING LIST REVISED

Project Name FRASER GRAIN TERMINAL - GRAIN CLEANER EQUIPMENT ADDITION

09-20-001C - Permit Amendment Drawing List

Company	Drawing Number	Revision	Date	Drawing Name
FWS	P001	B	6/11/2020	Surrounding Area Plan
FWS	P002	D	6/24/2020	Facility General Arrangement
FWS	P003	B	6/11/2020	Storage Bin Cross Section - Looking West
FWS	P004	B	6/11/2020	Storage Bin Cross Section - Looking South
FWS	P005	C	6/15/2020	Temporary Building Location
FWS	P006	A	6/8/2020	Code Compliance Plan
FWS	F001	B	6/18/2020	Flow Diagram
FWS	F002	B	6/18/2020	Dust Flow Diagram

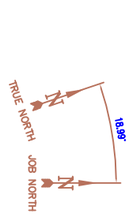

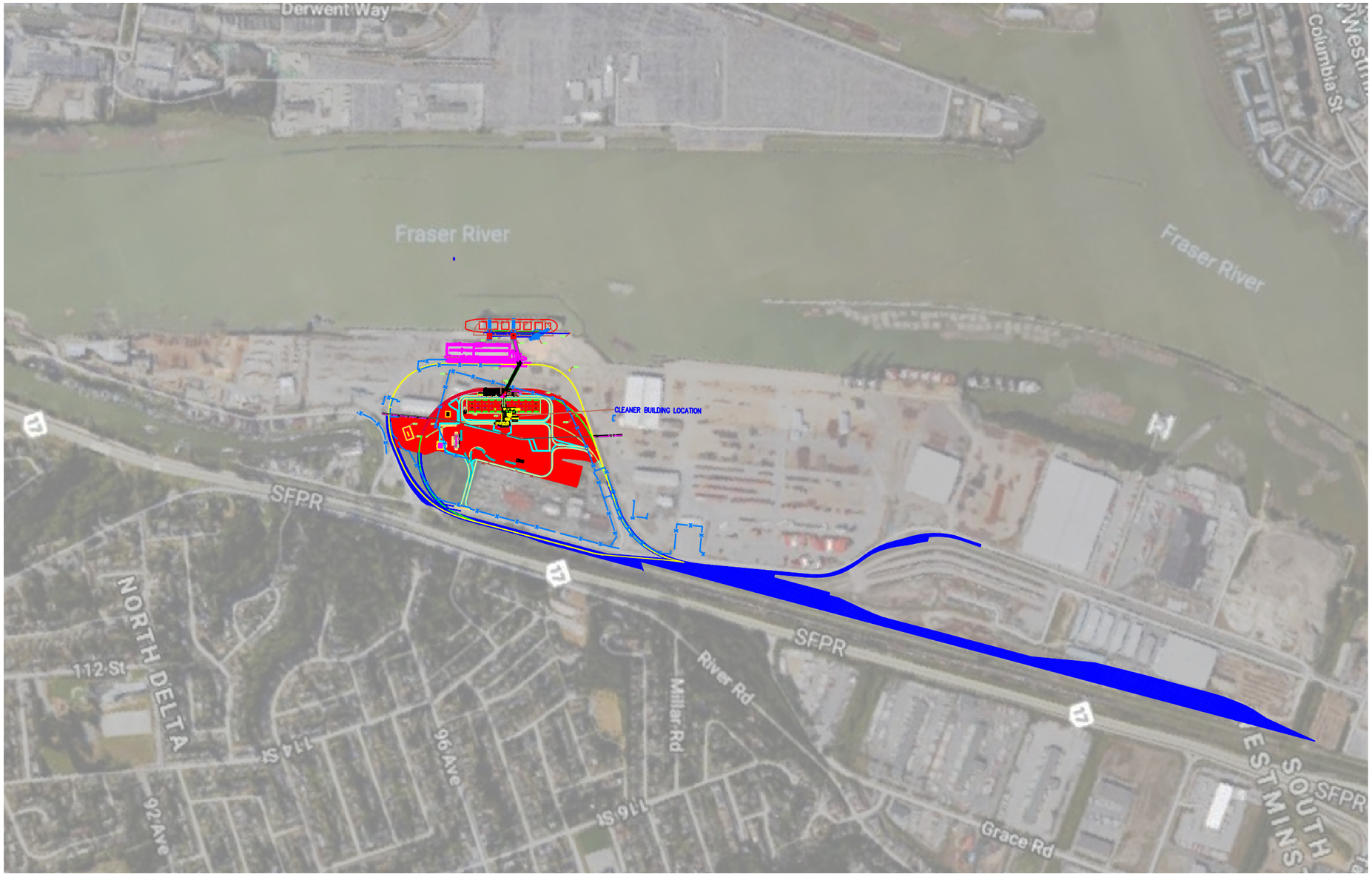

LEGEND:

- FGT AREA
- MARINE AREA
- FSD PARY LEASE AREA

SURROUNDING AREA PLAN – CONSTRUCTION

ISSUED FOR PERMIT

READ THIS DRAWING WITH DRAWINGS NUMBERED:

09-20-001CP001 SURROUNDING AREA PLAN-CONSTRUCTION
09-20-001CP002 PLAN VIEW @ EL. 100'-0"
09-20-001CP003 STORAGE BIN CROSS SECTION – LOOKING WEST
09-20-001CP004 SHIPPING SYSTEM ELEVATION – LOOKING SOUTH
09-20-001CP005 TEMPORARY BUILDING LOCATION
09-20-001CP006 CODE COMPLIANCE PLAN
09-20-001CP007 SITE FIRE ACCESS PLAN

REV	BY	DATE	VR	DESCRIPTION
B	MS	06/11/2020		REMOVED NOTE
A	MS	06/08/2020		ISSUED FOR PERMIT

P ENG
P MGR
O/O MGR N/A
PROCESS N/A

TITLE: FRAISER GRAIN TERMINAL – GRAIN CLEANER GENERAL ARRANGEMENT SURROUNDING AREA PLAN-CONSTRUCTION

CLIENT: P&H

LOCATION: SURREY, BC

DRAWN BY: MS
DATE: JUNE 2020
SCALE: 1:5000
JOB NO: 09-20-001C
DWG NO: P001
REVISION: B

FWS INDUSTRIAL PROJECTS CANADA LTD.
275 Commerce Drive
Winnipeg, MB R3P 1B3
(204) 487-2500 TEL
(204) 487-2900 FAX

C:_Vault\CUI\Vault\CAD\09_series\09-20-001_FGT_CDPA_Surrey_BC\Proposal\09-20-001CP001.dwg\P001RB Jun-11-2020 1:29:57 PM

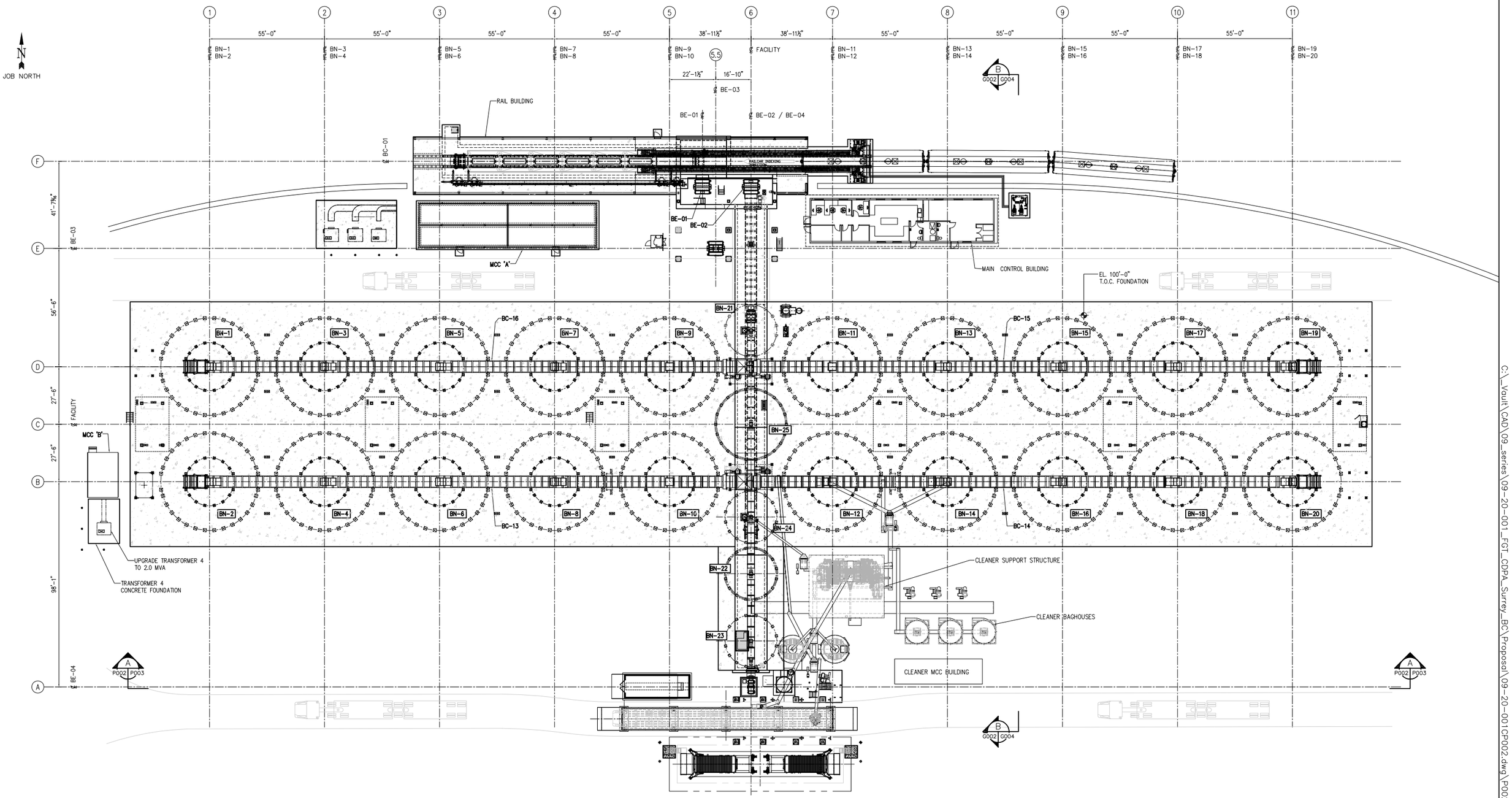

PLAN VIEW @ EL. 100'-0"

SCALE: CUSTOM

FWS EL. 100'-0" = GEODETIC EL. 5.8m

ISSUED FOR PERMIT

READ THIS DRAWING WITH DRAWINGS NUMBERED:

09-20-001CP001 SURROUNDING AREA PLAN-CONSTRUCTION
09-20-001CP002 PLAN VIEW @ EL. 100'-0"
09-20-001CP003 STORAGE BIN CROSS SECTION – LOOKING WEST
09-20-001CP004 SHIPPING SYSTEM ELEVATION – LOOKING SOUTH
09-20-001CP005 TEMPORARY BUILDING LOCATION
09-20-001CP006 CODE COMPLIANCE PLAN
09-20-001CP007 SITE FIRE ACCESS PLAN

REV	BY	DATE	VR	DESCRIPTION
D	MS	06/24/2020		REMOVED CALLOUTS/ANNOTATIONS
C	MS	06/15/2020		REVISED NOTE
B	MS	06/11/2020		GENERAL REVISION. REVISED DRAWING FILE NAME
A	MS	06/08/2020		ISSUED FOR PERMIT

P ENG
P MGR
D/O MGR N/A
PROCESS N/A

TITLE: FRAISER GRAIN TERMINAL – GRAIN CLEANER FACILITY GENERAL ARRANGEMENT PLAN VIEW @ EL. 100'-0"

CLIENT: P&H

LOCATION: SURREY, BC

DRAWN BY: MS
DATE: JUNE 2020
SCALE: AS NOTED
JOB NO: 09-20-001C
DWG NO: P002
REVISION: D

FWS INDUSTRIAL PROJECTS CANADA LTD.
275 Commerce Drive
Winnipeg, MB R3P 1B3
(204) 487-2500 TEL
(204) 487-2900 FAX

C:_Vault\CAD\09_series\09-20-001_FGT_CDPA_Surrey_BC\Proposal\09-20-001CP002.dwg\P002RD Jun-24-2020 2:43:54 PM

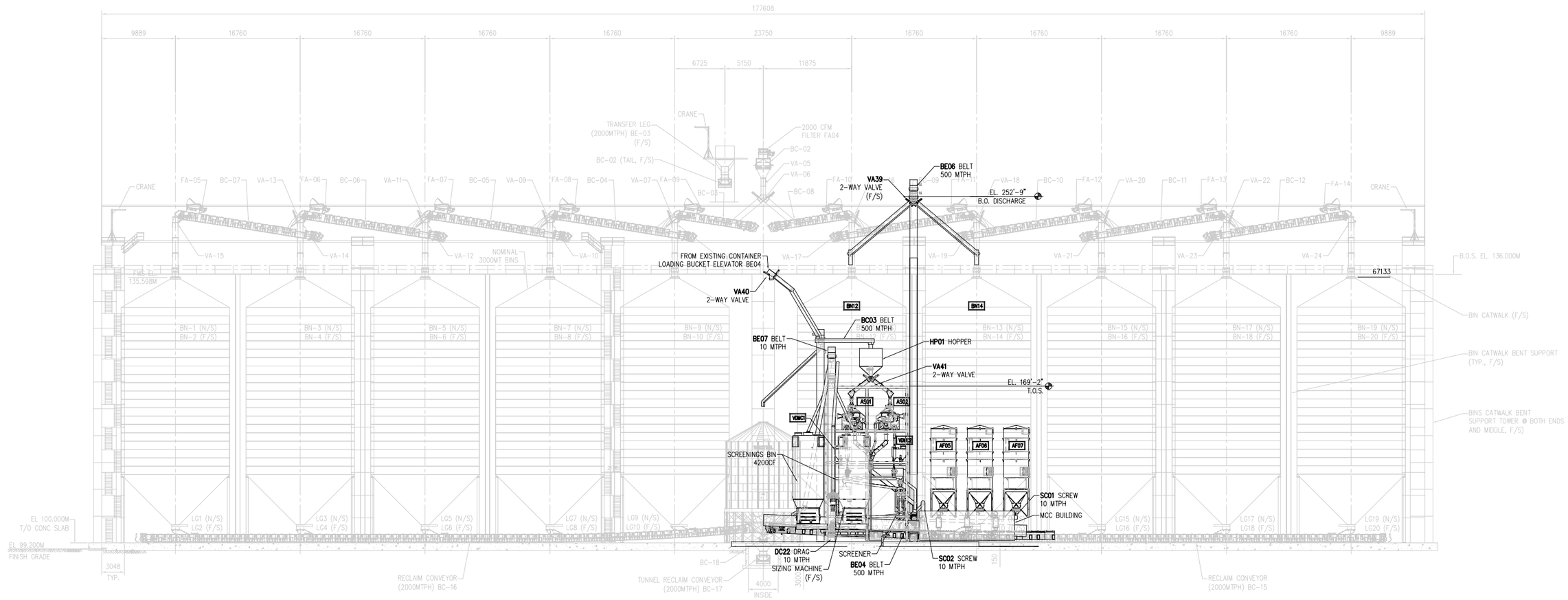

A SECTION
P002 P003 SCALE: 1:550

READ THIS DRAWING WITH DRAWINGS NUMBERED:

09-20-001CP001 SURROUNDING AREA PLAN-CONSTRUCTION
09-20-001CP002 PLAN VIEW @ EL. 100'-0"
09-20-001CP003 STORAGE BIN CROSS SECTION – LOOKING WEST
09-20-001CP004 SHIPPING SYSTEM ELEVATION – LOOKING SOUTH
09-20-001CP005 TEMPORARY BUILDING LOCATION
09-20-001CP006 CODE COMPLIANCE PLAN
09-20-001CP007 SITE FIRE ACCESS PLAN

ISSUED FOR PERMIT

REV	BY	DATE	VR	DESCRIPTION
B	MS	06/11/2020		GENERAL REVISION
A	MS	06/08/2020		ISSUED FOR PERMIT

P. ENG
P. MGR
D/O MGR N/A
PROCESS N/A

TITLE: FRAISER GRAIN TERMINAL – GRAIN CLEANER GENERAL ARRANGEMENT STORAGE BIN CROSS SECTION – LOOKING WEST
CLIENT: P&H
LOCATION: SURREY, BC
DRAWN BY: MS
DATE: JUNE 2020
SCALE: AS NOTED
JOB NO: 09-20-001C
DWG NO: P003
REVISION: B

FWS INDUSTRIAL PROJECTS CANADA LTD.
275 Commerce Drive
Winnipeg, MB R3P 1B3
(204) 487-2500 TEL
(204) 487-2900 FAX

C:_Vault\CAD\09_series\09-20-001_FGT_CDPA_Surrey_BC\Proposal\09-20-001CP003.dwg\P003RB Jun-11-2020 4:23:25 PM

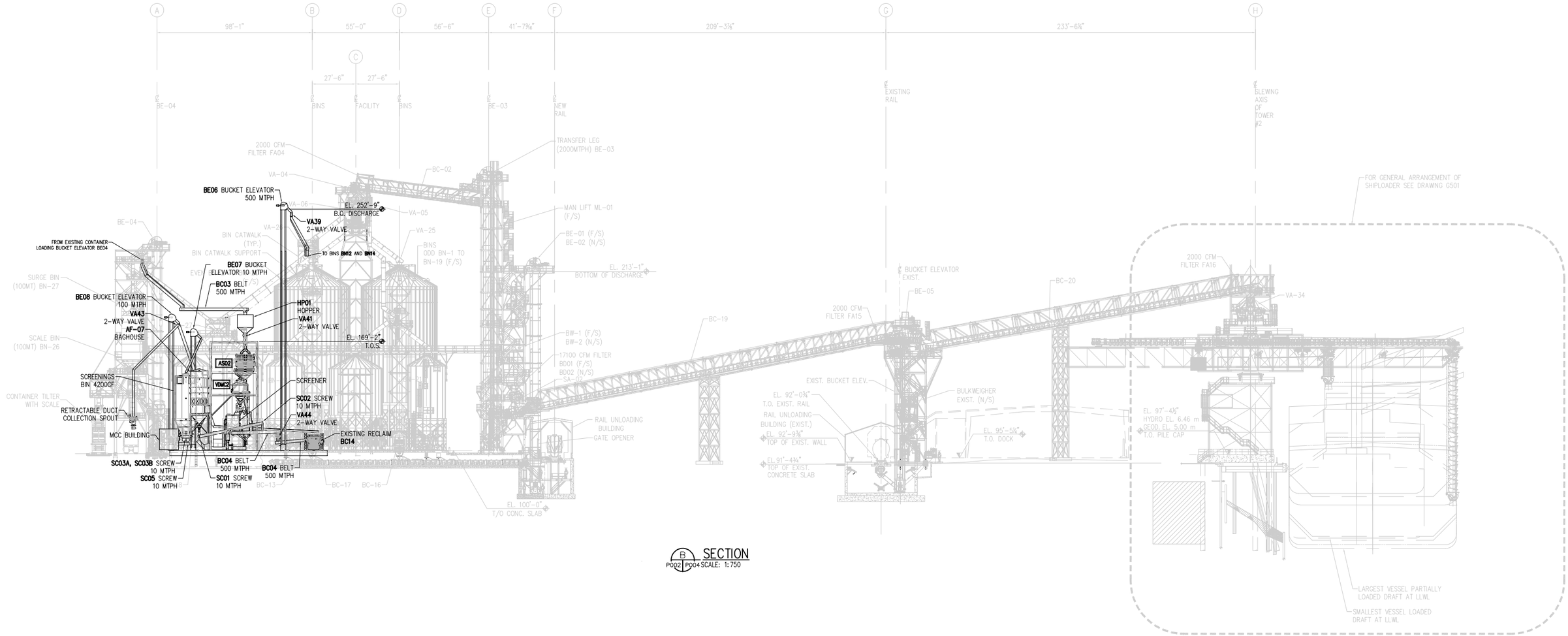

B SECTION
P002 P004 SCALE: 1:750

READ THIS DRAWING WITH DRAWINGS NUMBERED:

09-20-001CP001 SURROUNDING AREA PLAN-CONSTRUCTION
09-20-001CP002 PLAN VIEW @ EL. 100'-0"
09-20-001CP003 STORAGE BIN CROSS SECTION - LOOKING WEST
09-20-001CP004 SHIPPING SYSTEM ELEVATION - LOOKING SOUTH
09-20-001CP005 TEMPORARY BUILDING LOCATION
09-20-001CP006 CODE COMPLIANCE PLAN
09-20-001CP007 SITE FIRE ACCESS PLAN

ISSUED FOR PERMIT

REV	BY	DATE	VR	DESCRIPTION
B	MS	06/11/2020		GENERAL REVISION
A	MS	06/10/2020		ISSUED FOR PERMIT

P. ENG
P. MGR
D/O MGR N/A
PROCESS N/A

TITLE: FRAISER GRAIN TERMINAL - GRAIN CLEANER GENERAL ARRANGEMENT SHIPPING SYSTEM ELEVATION - LOOKING SOUTH
DRAWN BY: MS
DATE: JUNE 2020
CLIENT: P&H
SCALE: AS NOTED
JOB NO: 09-20-001C
LOCATION: SURREY, BC
DWG NO: P004
REVISION: B

FWS INDUSTRIAL PROJECTS CANADA LTD.
275 Commerce Drive
Winnipeg, MB R3P 1B3
(204) 487-2500 TEL
(204) 487-2500 FAX

C:_Vault\CAD\09_series\09-20-001_FGT_CDPA_Surrey_BC\Proposal\09-20-001CP004.dwg\P004RB Jun-11-2020 1:27:03 PM

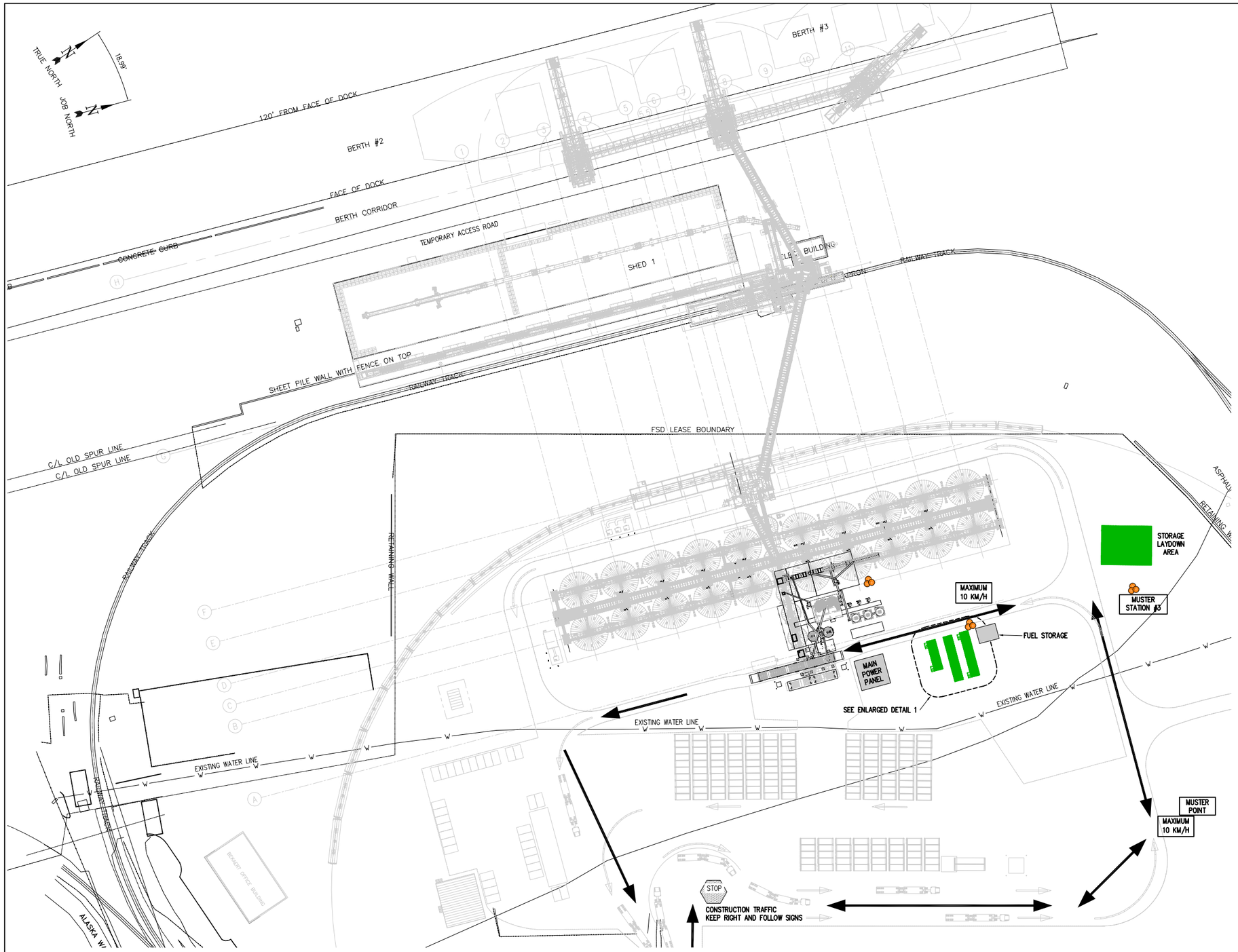

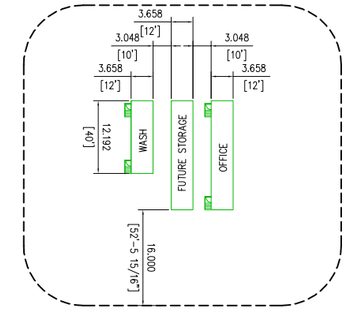

TEMPORARY CONSTRUCTION BUILDINGS – ENLARGED DETAIL 1
SHOWING SPATIAL SEPARATION

LEGEND:

FIRE EXTINGUISHER

READ THIS DRAWING WITH DRAWINGS NUMBERED:

09-20-001CP001 SURROUNDING AREA PLAN-CONSTRUCTION
09-20-001CP002 PLAN VIEW @ EL. 100'-0"
09-20-001CP003 STORAGE BIN CROSS SECTION – LOOKING WEST
09-20-001CP004 SHIPPING SYSTEM ELEVATION – LOOKING SOUTH
09-20-001CP005 TEMPORARY BUILDING LOCATION
09-20-001CP006 CODE COMPLIANCE PLAN
09-20-001CP007 SITE FIRE ACCESS PLAN

ISSUED FOR PERMIT

REV	BY	DATE	VR	DESCRIPTION	D/O MGR	P ENG	P MGR
C	MS	06/15/2020		GENERAL REVISION			
B	MS	06/11/2020		GENERAL REVISION			
A	MS	06/08/2020		ISSUED FOR PERMIT			

DISTRIBUTION	COPIES	DATE
CLIENT		
PROJ. MGR.		
FIELD		
E-MAIL		
PURCHASING		
ENGINEERING		

TITLE: FRAISER GRAIN TERMINAL – GRAIN CLEANER TEMPORARY BUILDING LOCATION PLAN VIEW

CLIENT: P&H

LOCATION: SURREY, BC

DRAWN BY: MS
DATE: JUNE 2020
SCALE: AS NOTED
JOB NO: 09-20-001C
DWG NO: P005
REVISION: C

FWS INDUSTRIAL PROJECTS CANADA LTD.
275 Commerce Drive
Winnipeg, MB R3P 1B3
(204) 487-2500 TEL
(204) 487-2900 FAX

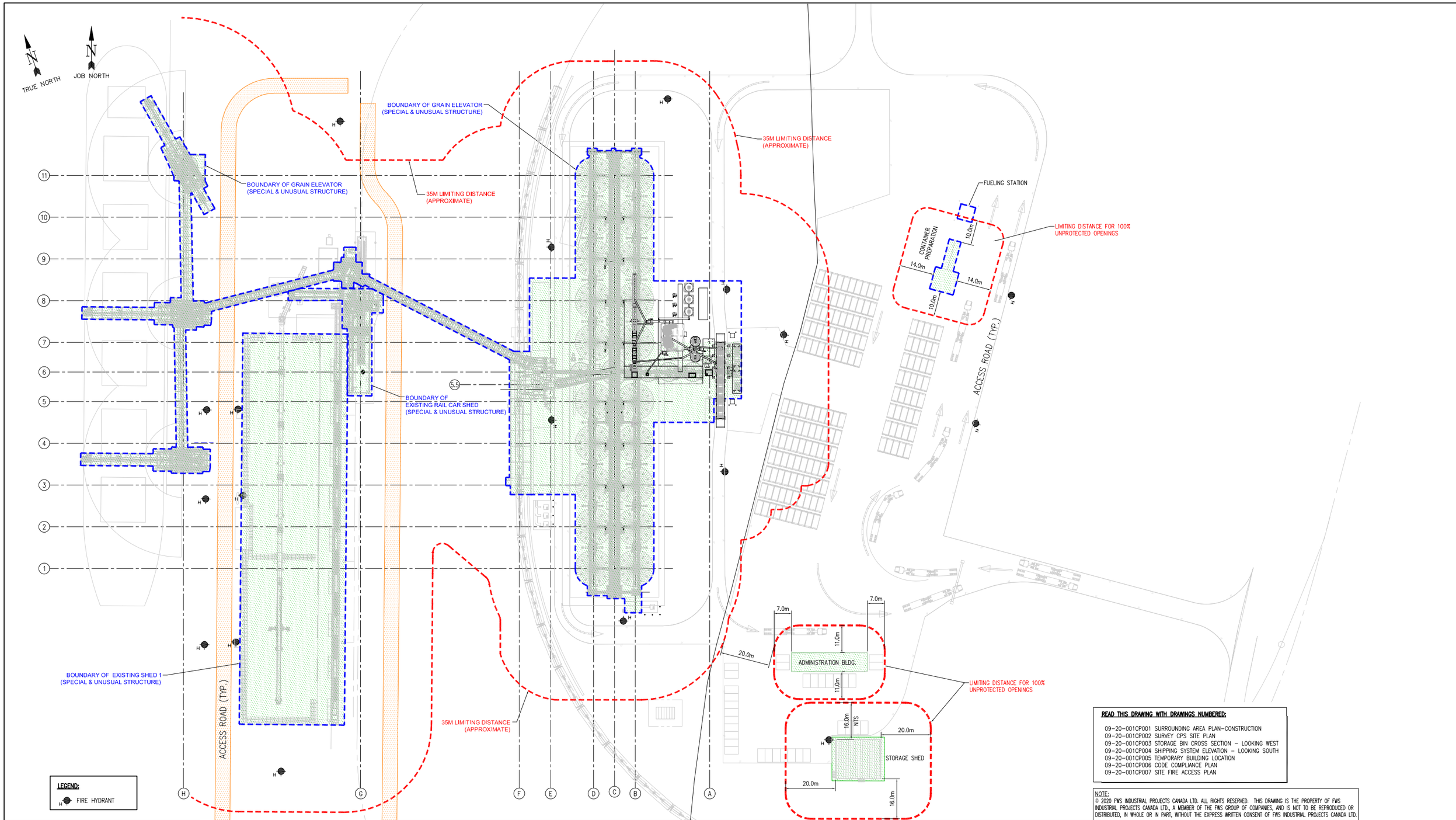

READ THIS DRAWING WITH DRAWINGS NUMBERED:

09-20-001CP001 SURROUNDING AREA PLAN-CONSTRUCTION
09-20-001CP002 SURVEY CPS SITE PLAN
09-20-001CP003 STORAGE BIN CROSS SECTION – LOOKING WEST
09-20-001CP004 SHIPPING SYSTEM ELEVATION – LOOKING SOUTH
09-20-001CP005 TEMPORARY BUILDING LOCATION
09-20-001CP006 CODE COMPLIANCE PLAN
09-20-001CP007 SITE FIRE ACCESS PLAN

ISSUED FOR PERMIT

REV	BY	DATE	VR	DESCRIPTION	D/O MGR	P ENG	P MGR
A	MS	06/08/2020		ISSUED FOR REVIEW – PRELIMINARY NOT FOR CONSTRUCTION			

DISTRIBUTION	COPIES	DATE
CLIENT		
PROJ. MGR.		
FIELD		
E-MAIL		
PURCHASING		
ENGINEERING		

TITLE: FRAISER GRAIN TERMINAL – GRAIN CLEANER CODE COMPLIANCE PLAN

CLIENT: P&H

LOCATION: SURREY, BC

DRAWN BY: MS
DATE: JUNE 2020
SCALE: AS NOTED
JOB NO: 09-20-001C
DWG NO: P006
REVISION: A

FWS INDUSTRIAL PROJECTS CANADA LTD.
275 Commerce Drive
Winnipeg, MB R3P 1B3
(204) 487-2500 TEL
(204) 487-2900 FAX

C:_Vault\CAD\09_series\09-20-001_FGT_CDPA_Surrey_BC\Proposal\09-20-0010P006.dwg\P006RA Jun-08-2020 2:20:23 PM

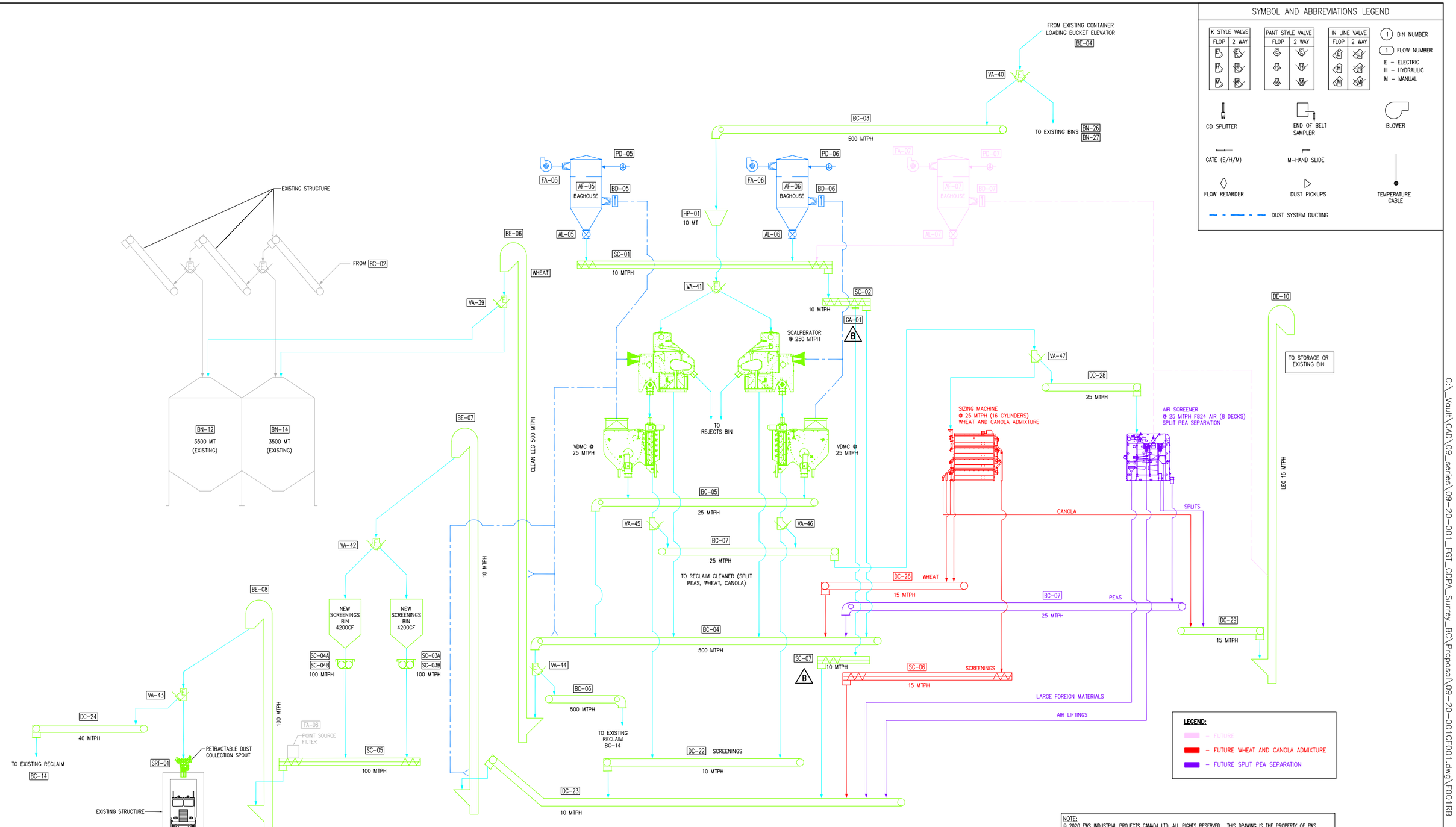

WORK IN PROGRESS
DRAWING
INCOMPLETE

PRELIMINARY
NOT FOR
CONSTRUCTION

REV	BY	DATE	VR	DESCRIPTION
B	RH	06/17/2020		ADDED GA-01 AND SCREW CONVEYOR
A	MS	06/11/2020		ISSUED FOR REVIEW – PRELIMINARY NOT FOR CONSTRUCTION

P. ENG
P. MGR
D/O MGR N/A
PROCESS N/A

TITLE
FRASER GRAIN TERMINAL
CLEANER UPGRADE
PRELIMINARY 500 MTPH FLOW

CLIENT
P&H

LOCATION
SURREY, BC

DRAWN BY MS
DATE JUNE 2020
SCALE AS NOTED
JOB NO 09-20-001C
DWG NO F001
REVISION B

FWS
FWS INDUSTRIAL PROJECTS CANADA LTD.
275 Commerce Drive
Winnipeg, MB R3P 1B3
(204) 487-2500 TEL
(204) 487-2900 FAX

C:_Vault\CAD\09_series\09-20-001_FGT_CDPA_Surrey_BC\Proposal\09-20-001CF001.dwg\F001RB Jun-17-2020 4:19:10 PM

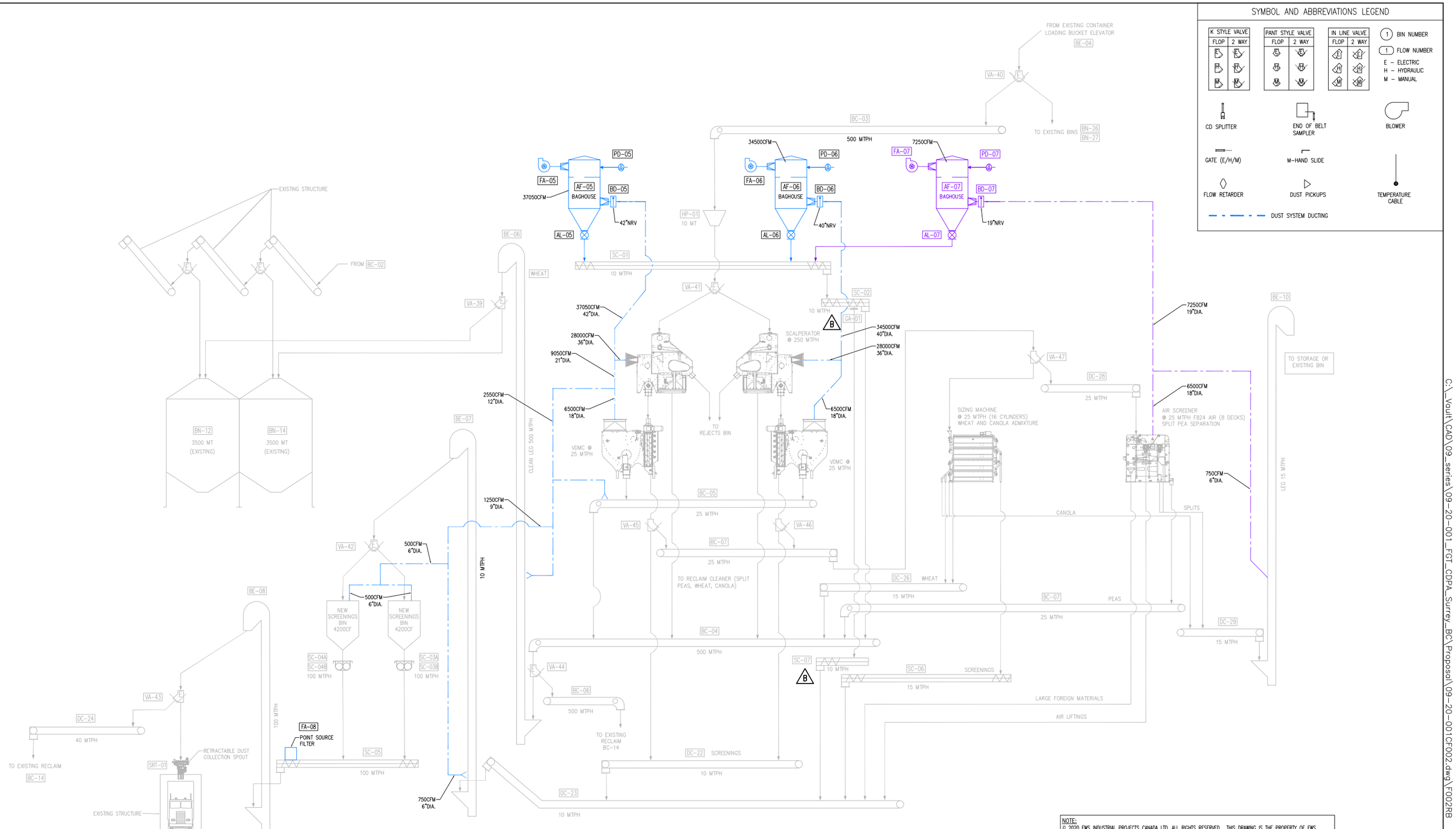

WORK IN PROGRESS DRAWING INCOMPLETE	PRELIMINARY NOT FOR CONSTRUCTION

REV	BY	DATE	VR	DESCRIPTION
B	RH	06/17/2020		ADDED GA-01 AND SCREW CONVEYOR
A	MS	06/11/2020		ISSUED FOR REVIEW – PRELIMINARY NOT FOR CONSTRUCTION

P. ENG
P. MGR
D/O MGR N/A
PROCESS N/A

TITLE: FRASER GRAIN TERMINAL
DUST FLOW

CLIENT: P&H

LOCATION: SURREY, BC

DRAWN BY: MS
DATE: JUNE 2020
SCALE: AS NOTED
JOB NO: 09-20-001C
DWG NO: F002
REVISION: B

FWS
FWS INDUSTRIAL PROJECTS CANADA LTD.
275 Commerce Drive
Winnipeg, MB R3P 1B3
(204) 487-2500 TEL
(204) 487-2900 FAX

ATTACHMENT C

Drawings – ISL Civil, Drainage, and Utility Drawings

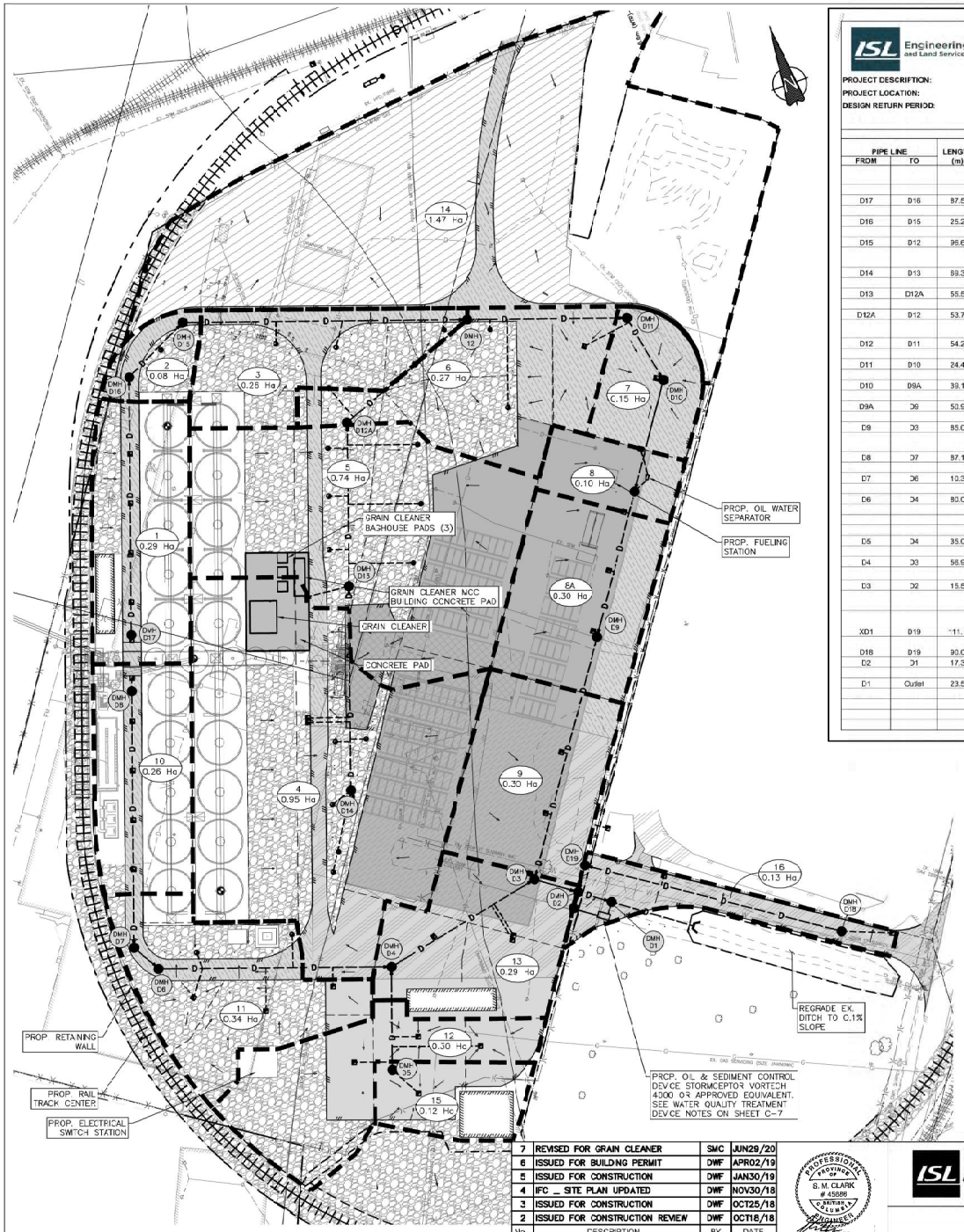

ISL Engineering and Land Services

TABLE 1 - DRAINAGE SYSTEM ANALYSIS

METRIC UNITS

PROJECT DESCRIPTION: Fraser Grain Terminal
PROJECT LOCATION: City of Surrey
DESIGN RETURN PERIOD: 5 Year Return - Metro Vancouver Regional Zone 4 + 21% for Climate Change

IDF CURVE DATA

	TIME (min)	I (mm/hr)
POINT 1	5	68.7
POINT 2	120	13.6

PIPELINE PARAMETERS									RATIONAL METHOD									
PIPE LINE		LENGTH	SLOPE	DIA. Calc.	DIA Prop.	r	V	Tf	AREA		Tc	I	A x R		R	5 Years Qest.	Qcap. Proposed	REMARKS
FROM	TO	(m)	%	(mm)	(mm)		(m/s)	(min)	INC (ha)	SUM (ha)	(min)	(mm/hr)	INCR	SUM		(cms)	(cms)	
D17	D16	87.5	0.50	209.8	250	0.013	0.88	1.70	0.25	0.29	15.00	38.5	0.25	0.25	0.85	0.026	0.042	Catchment No. 1
D16	D15	25.2	0.50	223.1	250	0.013	0.88	0.49	0.08	0.37	16.70	36.5	0.03	0.31	0.75	0.031	0.042	Catchment No. 2
D15	D12	96.6	0.30	286.0	300	0.013	0.75	2.15	0.26	0.63	17.19	36.0	0.17	0.48	0.65	0.047	0.053	Catchment No. 3
D14	D13	89.3	0.27	359.3	375	0.013	0.82	1.40	0.95	0.95	15.00	38.5	0.73	0.73	0.8	0.081	0.091	Catchment No. 4
D13	D12A	55.6	0.25	440.2	450	0.013	0.90	1.03	0.74	1.69	16.40	36.8	0.53	1.32	0.75	0.134	0.143	Catchment No. 5
D12A	D12	53.7	0.28	426.1	450	0.013	0.95	0.94	0.00	1.69	17.43	35.7	0.00	1.32	0.75	0.130	0.151	No contributing area
D12	D11	54.2	0.13	563.9	600	0.013	0.78	1.15	0.27	2.59	19.34	33.9	0.23	1.99	0.75	0.188	0.221	Catchment No. 6
D11	D10	24.4	0.14	556.6	600	0.013	0.81	0.50	0.07	2.66	20.50	32.9	0.03	2.06	0.9	0.188	0.230	Catchment No. 7
D10	D9A	39.1	0.13	570.9	675	0.013	0.85	0.77	0.10	2.76	21.00	32.5	0.09	2.15	0.9	0.194	0.303	Catchment No. 8
D9A	D9	50.6	0.12	601.8	675	0.013	0.81	1.04	0.30	3.06	21.76	32.0	0.27	2.42	0.9	0.214	0.291	Catchment No. 8A
D9	D8	85.0	0.11	611.7	675	0.013	0.78	1.82	0.30	3.06	21.76	32.0	0.27	2.42	0.9	0.214	0.279	Catchment No. 9
D8	D7	87.1	0.30	221.6	300	0.013	0.75	1.94	0.26	0.26	15.00	38.5	0.22	0.22	0.85	0.024	0.053	Catchment No. 10
D7	D6	10.3	0.29	218.0	300	0.013	0.74	0.23	0.00	0.26	16.94	36.2	0.00	0.22	0.9	0.022	0.052	No contributing area
D6	D4	80.0	0.25	298.2	375	0.013	0.79	1.68	0.34	0.60	17.17	36.0	0.23	0.48	0.75	0.048	0.088	Catchment No. 11
									0.12	0.12			0.11	0.11	0.9			Catchment No. 15
D5	D4	35.0	0.50	238.8	250	0.013	0.88	0.66	0.30	0.42	15.00	38.5	0.24	0.35	0.8	0.037	0.042	Catchment No. 12
D4	D3	58.6	1.10	302.3	375	0.013	1.68	0.57	0.25	1.31	18.85	34.3	0.23	0.99	0.9	0.103	0.184	Catchment No. 13
D3	D2	15.5	0.13	571.1	750	0.013	0.91	0.28	0.00	4.37	23.58	30.7	0.00	3.50	0.9	0.299	0.401	No contributing area
XD1	D19	111.1	0.10	404.9	750	0.013	0.80	2.32	1.47	1.47	20.00	33.3	0.74	0.74	0.5	0.068	0.352	Ex. 750mm diameter pipe, location and slope assumed. Catchment No. 14
D18	D19	90.0	0.25	195.0	300	0.013	0.68	2.19	0.13	0.13	10.00	47.2	0.12	0.12	0.9	0.015	0.048	Catchment No. 16
D2	D1	17.3	0.17	584.0	750	0.013	1.04	0.28	0.00	5.97	23.87	30.5	0.00	4.24	0.9	0.359	0.459	No contributing area
D1	Outlet	23.5	0.17	582.5	750	0.013	1.04	0.38	0.00	5.97	24.15	30.3	0.00	4.24	0.5	0.357	0.459	No contributing area

LEGEND:

- CATCHMENT BOUNDARY
- GRADE BREAK LINE
- BUILDING OUTLINE
- SURFACE FLOW DIRECTION
- MH No.
- CATCHMENT NUMBER/AREA
- CATCHBASIN
- LAWNBASIN
- MANHOLE LID
- TYPICAL PAVEMENT AREA
- HEAVY LOAD PAVEMENT AREA
- EXISTING PAVEMENT AREA
- PROPOSED GRAVEL AREA

DESIGNED TO MEET THE NATIONAL BUILDING CODE 2015

No.	DESCRIPTION	BY	DATE
7	REVISED FOR GRAIN CLEANER	SMC	JUN29/20
6	ISSUED FOR BUILDING PERMIT	DWF	APR02/19
5	ISSUED FOR CONSTRUCTION	DWF	JAN30/19
4	IFC _ SITE PLAN UPDATED	DWF	NOV30/18
3	ISSUED FOR CONSTRUCTION	DWF	OCT25/18
2	ISSUED FOR CONSTRUCTION REVIEW	DWF	OCT18/18

REVISIONS

PROFESSIONAL ENGINEER PROVINCE OF BRITISH COLUMBIA S. M. CLARK # 45686 2020-06-30

P.Eng.

ISL Engineering and Land Services
#201, 8506 – 200 STREET
Langley, B.C. V2Y 0M1
Office: (604) 371-0091
Fax: (604) 371-0058
www.islengineering.com

Scale 1:750

FRASER GRAIN TERMINAL

NEW GRAIN EXPORT FACILITY
11041 ELEVATOR ROAD, SURREY

Drawn: DWF | Design Checked: SJV | Date: JUL 2019
Designed: DWF | Discipline Review: SJV | Date: JUL 2019

STORM WATER MANAGEMENT PLAN

Drawing No. 32022 C-08

Sheet No. 12

ATTACHMENT D

Stormwater Impacts Review

Memorandum

Integrated Expertise. Locally Delivered.

Suite 201, 8506 200 Street, Langley, BC V2Y 0M1 T: 604.371.0091 F: 604.371.0098

To:	**FWS Group**	Date:	**June 30, 2020**
Attention:	**Ian Dueck**	Project No.:	**32156**
Cc:	**Andrew Smith**		
Reference:	**Grain Cleaner Stormwater Impacts**		
From:	**Steve Clark P.Eng**		
Reviewed by:	**Steve Verkaik P.Eng**		

Background

ISL was retained by FWS Group to determine if the addition of a Grain Cleaner structure and associated accessory structures and building would have a significant impact to stormwater conveyance on the property. See Figure 1.0 below for the location of the proposed Grain Cleaner structure.

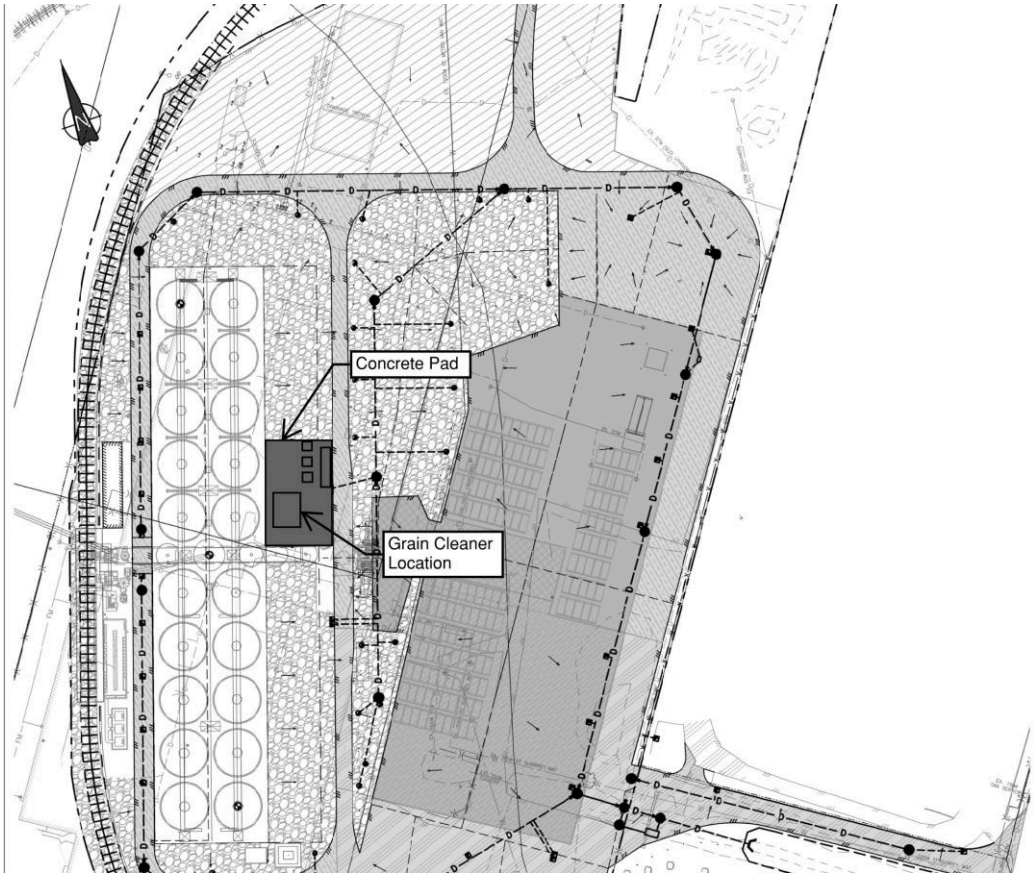

Figure 1.0 – Grain Cleaner Location

Stormwater Control Impacts

The Grain Cleaner has three main components that will require a 600m^2 concrete pad. These are the main support structure, three baghouse structures, and the MCC building. Each of these would be installed within the drainage sub-catchments #4 and #5. The concrete pad would introduce additional impervious area as it will be installed outside of the asphalt pavement. Compared to the sub-catchments the pad would be constructed on this represents only 3.4% of the area.

The two sub-catchments affected had previously estimated run-off coefficients of 0.80 and 0.75. This means that during a 1 in 5-year storm event 80% and 75% of the precipitation in each respective sub-catchment is expected to shed off and be collected by the storm sewer system. The storm system installed at the Fraser Grain Terminal site was designed to convey the 1 in 5-year storm event with additional capacity. Run-off coefficients are selected based on the average impervious to pervious surface area of a sub-catchment. In this circumstance the 3.4% increase in impervious area introduced by the Grain Cleaner structures did not warrant a change in the run-off coefficients selected as they still adequately represent the sub-catchments.

The storm system as designed operates under capacity from 42% to 94% during the design event. The very minor 3.4% increase of impervious area in sub-catchments #4 & #5 would have a negligible impact to the storm system and any additional flows would be conveyed without surcharge in any part of the system. The Stormwater Management Plan (32022-C-08) has been updated for the changes to the storm system since tender issue and capacities of each section are provided.

There are two storm water quality control devices installed on site. The first is located near the fueling station where it will intercept any fuel spills before entering the storm system. This one is unaffected by any additional flows. The second water quality device is at the end of the system adjacent the access road where all flow will be treated prior to discharge to the ditch. The storm sewer section leading to the storm water quality control device will operate at 78% capacity during the design event with the additional area considered. This will also have no effect on the overall drainage system or storm water quality control device at the downstream location.

ATTACHMENT E

Traffic Review

Stantec

Memo

To:	Ted Fisher, P.Eng., P.Ag. FWSgroup.com	From:	James Lao, P.Eng. Stantec Consulting Ltd.
File:	1135200012	Date:	July 3, 2020

Reference: FTG – Cleaner Project NDA Traffic Review – Memorandum 1 - Final

1.0 INTRODUCTION

FWS Group (FWS) has retained Stantec Consulting to conduct an updated traffic review for the proposed Development Permit Amendment to the current Fraser Great Terminal (FGT) project located on Fraser Surrey Port Lands (FSPL).

On February 2017, Stantec previously prepared a transportation impact assessment (TIA) for the proposed FGT. The overall conclusion of the study indicated that the impact of the proposed FGT side on the FSPL is minimal on both the short and long term. Regardless, the additional traffic generated by FGT results in a minimal increase to an already existing problematic situation on the existing road network within FSPL.

The development permit amendment proposes a small cleaner system to the FGT. This memorandum will outline at a high-level the effects and changes to the original traffic study and proportional changes and impacts that are expected. An estimate of the proposed traffic volumes generated by the cleaner facility will be combined with the traffic volumes provided in the February 2017 traffic study. The potential impact of the cleaner facility and traffic operation effects will also be discussed on a qualitative basis.

2.0 PROPOSED DEVELOPMENT

For the proposed Development Permit Amendment, a small cleaner system is being proposed to the FGT. This system would bring the following preliminary traffic volume changes:

- The cleaner system is designed to operate nominally at 12 hours per night on weekdays and 20 hours per day on weekends;
- A total operating hour of 3,507 hours per year is estimated with an average of 39 weeks per year or 273 days per year;
- Weekday night shift cleaning will store screenings at night then load out nominally 5 trucks per day, on days when it is operating. This is additive traffic to Container and Bulk Truck Loading;
- Weekend traffic could have a total of 48 hours of operation;
- Design truck volume would be based on shipping 10 trucks, with these 10 trucks occurring during a 16-hour window;
- Screening trucks are hauling lighter products than grain therefore, a maximum net payload of 25MT is expected instead of 40MT.

3.0 FGT ANALYSIS SCENARIOS

If further traffic analysis is determined to be necessary, Stantec will undertake various sets of macroscopic analysis using Synchro 9.0 software. These scenarios for the potential updated traffic study would include the following as summarized in Table 3.1 below.

Table 3.1 – FGT Scenarios for Analysis

Road Network Configurations	Time Horizon	Traffic Scenario	Time Periods
Existing Road Network	Opening Day, No Train Blockages	Base Traffic	AM Peak Hour PM Peak Hour
		With FGT Traffic	AM Peak Hour PM Peak Hour
	Opening Day, With Train Blockages	Base Traffic	AM Peak Hour PM Peak Hour
		With FGT Traffic	AM Peak Hour PM Peak Hour
	Future Horizon (2029), With Train Blockages	Base Traffic	AM Peak Hour PM Peak Hour
		With FGT Traffic	AM Peak Hour PM Peak Hour

4.0 SITE TRIP GENERATION AND ASSIGNMENT

As part of this memorandum, an updated trip generation estimate was conducted to determine the impact of the addition of the small cleaner system to the current FGT project. Fraser Grain Terminal is expected to generate traffic through employees and truck traffic to/from the facility. FGT provided the truck traffic estimates for the new small cleaner system to determine the peak trip generation as shown in the proceeding sections.

EMPLOYEE TRIPS ESTIMATE

It is expected that the same number of employees are involved in the operation with the addition of the small cleaner system. From the previous traffic study, the FGT project estimates the following:

- In the morning peak hour up to 44 FGT staff plus 3 FSD staff will enter the facility and 6 staff from the evening shift will exit the new facility
- In the evening peak hour 6 FGT plus 2 FSD staff will enter and 44 FGT plus 3 FSD staff will exit the new facility

Utilizing the same trip generation assumptions as the previous report, the total volume of traffic generated by staff at the FGT operation is 53 vehicles per hour during the weekday AM peak hour, with 47 inbound trips and 6 outbound trips. It is anticipated that during the weekday PM peak hour 55 vehicles per hour is expected with 8 inbound and 47 outbound trips.

Reference: **FTG – Cleaner Project NDA Traffic Review – Memorandum 1 - Final**

TRUCK TRAFFIC ESTIMATE

Truck traffic from the current proposed FGT site was also determined in the original traffic study. The terminal expected to operate seven days a week, all year long minus statutory holidays. The total project volume of 630,000 tonnes of product by truck per year (600,000 tonnes in containers, and 30,000 tonnes by bulk). In summary, the current proposed FGT site will generate the following vehicle trips:

- Average of 95 trucks daily
- Average of 2.6 trucks per day of bulk handling units
- Total of 98 trucks each way per day
- 16 trucks will be moved internally from FSD to FGT
- A 10-hour shift will average 9 trucks per hour
- Peak hour expected is 13 trucks inbound, 13 trucks outbound to/from the new FGT facility
- A 50/50 split from east and west of the interchange is assumed for the study

Table 4.1 summarizes the FGT traffic estimates for the current proposed site.

Table 4.1 – FGT Traffic Estimates

	Daily Trips	Weekly Trips	Monthly Trips	Annual Trips
Employees	122	460	2,020	22,444
Trucks	196	980	5,880	49,600
Total	318	1,440	7,900	72,050

Using the same principles and assumptions to obtain truck traffic estimates, the proposed small cleaner system is expected to generate the following number of trips:

- Weekday night shift is 5 trucks per day
- Weekend traffic a total of 10 trucks in 16-hour window
- Maximum weekend truck traffic could be 20 trucks
- Peak hour expected is 4 trucks, 2 inbound and 2 outbound
- Weekend peak hour is expected to be 4 trucks, 2 inbound and 2 outbound

Overall, the combined truck traffic expected for the current proposed FGT site and the addition of the small cleaner system will be:

- Peak hour is expected to be **15 trucks inbound, and up to 15 trucks outbound** to/from the facility

Based on the proposed additional truck traffic, it is expected that minimal impacts are expected for the traffic network with the addition of a small cleaner system to the proposed FGT site.

This additional volume would be added to the existing traffic volumes collected for the study area but due to the limited increase expected, traffic operations are expected to operate like the original traffic study prepared by Stantec in 2017.

5.0 CONCLUSIONS

FWS Group has requested for an updated traffic review for the proposed Development Permit Amendment to the current Fraser Great Terminal (FGT) project located on Fraser Surrey Port Lands (FSPL). The

Reference: **FTG – Cleaner Project NDA Traffic Review – Memorandum 1 - Final**

amendment proposes the inclusion of a small cleaner system and therefore, a traffic study update may be required to assess the traffic operational impact due to this addition.

As provided by FWS, the cleaner system is designed to operate nominally for 3,507 hours per year at night shifts on weekdays and weekends for 39 weeks per year.

Table 5.1 below summarizes the net increase in trip generation with the original proposed FGT site and the addition of the small cleaner system.

Table 5.1 – FGT Traffic Estimates

Time of Day	Trip Type	Current FGT Proposed		Addition of Small Cleaner		Total Trip Generation			Net Difference	
		Inbound	Outbound	Inbound	Outbound	Inbound	Outbound	Total	Inbound	Outbound
AM	Employee Trips	47	6	0	0	47	6	53	0	0
	Truck Trips	13	13	2	2	15	15	30	+2	+2
	Total Trips	**60**	**19**	**2**	**2**	**62**	**21**	**83**	**+2**	**+2**
PM	Employee Trips	8	47	0	0	8	47	55	0	0
	Truck Trips	13	13	2	2	15	15	30	+2	+2
	Total Trips	**21**	**66**	**2**	**2**	**23**	**68**	**91**	**+2**	**+2**

From the proposed additional trips expected for the small cleaner system, traffic impact to the existing road network is expected to be insignificant. The net increase in trips for the inbound and outbound totals approximately 4 vehicle trips per hour in the AM and PM peak hours. With this insignificant increase in the expected traffic pattern, traffic operations are expected to operate similarly.

Regards,

Stantec Consulting Ltd.

James Lao P.Eng
Transportation Engineer

Phone: 604 412 2975
james.lao@stantec.com

ATTACHMENT F

Fire and Explosion Plan

FRASER
GRAIN TERMINAL

PROJECT PERMIT AMENDMENT

Fire & Explosion Plan

Fraser Grain Terminal Project
VFPA Permit #15-041
June 8, 2020
FWS Job #09-20-001C
Revision 0

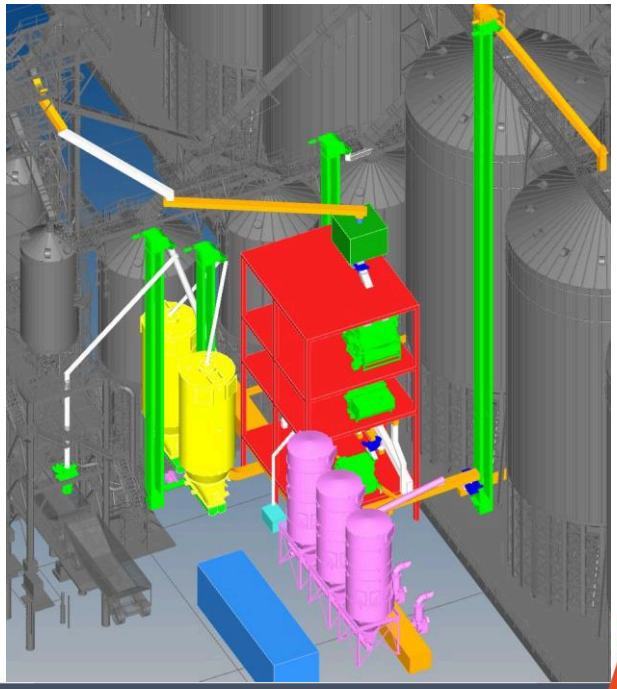

FWS THE CONFIDENCE BUILDERS

FWS GROUP OF COMPANIES

Fraser Grain Terminal

Fire & Explosion Plan

TABLE OF CONTENTS

Fraser Grain Terminal

Fire & Explosion Plan

0- EXECUTIVE SUMMARY

Fire and explosion measures for the grain cleaning addition are designed in accordance with applicable standards of the National Fire Protection Association (NFPA), which do not require sprinklers or fire separations within the facility.

The Canadian Electrical Code (CEC) and National Fire Code (NFC) are followed where applicable.

The risk of fire and explosion is reduced to the extent possible by these measures:

- containment and removal of combustible and explosive dusts
- elimination of ignition sources
- provision of deflagration venting where risk cannot be eliminated
- hazard monitoring and automatic controls
- certification of equipment in hazardous areas
- housekeeping program (by Owner)

Exiting from working areas meets National Building Code (NBC) requirements.

1- APPLICABLE CODES

The following codes are applicable to this project:

- National Building Code of Canada (NBC) 2015
- Canadian Electrical Code (CEC) 2015
- National Fire Code (NFC) 2015

2- REFERENCE STANDARDS

The following reference standards are applied where national codes are not strictly applicable:

- NFPA 10 Standard for Portable Fire Extinguishers
- NFPA 61 Standard for the Prevention of Fire and Dust Explosions in Agricultural and Food Processing Facilities
- NFPA 68 Standard on Explosion Preventions by Deflagration Venting

3- FIRE AND EXPLOSION PREVENTION APPROACH

The grain cleaning equipment addition is part of the special and unusual structure of the main grain handling facility. As such, fire and explosion prevention measures are design in accordance with applicable NFPA standards.

The Canadian Electrical Code and National Fire Code are followed where applicable.

The risk of fire and explosion is reduced to the extent possible by control of combustible and explosive dusts, removal of ignition sources, and provision of deflagration venting where the risk cannot be eliminated.

Combustible and explosive dusts are controlled by completely enclosing storage bins and all conveyance equipment to prevent dust from escaping. Dust collection systems remove dust at key locations within the enclosed equipment, to prevent it from reaching a potentially explosive concentration.

Ignition sources are removed by the following measures, following applicable NFPA standards:

- Tramp metal which could cause sparking is removed by magnetic collectors when grain is received.
- Sensors are installed on major equipment to detect conditions which could cause overheating and shut the equipment down before it can reach ignition temperature. These include temperature sensors on motors and bearings, alignment sensors on the bucket elevator belt, and sensors to detect plugging with product.
- Bucket elevator and dust collectors are provided with deflagration vents.
- Dust collectors are provided with isolation devices to prevent a deflagration from propagating.
- Hazard locations where explosive dust may be present are classified according to the zone system of the Canadian Electrical Code. Motors and electrical components in these areas are certified for the appropriate hazardous location.

4- PREVENTION MEASURES

4.1 BUCKET ELEVATOR

The bucket elevator is provided with: motor temperature sensors, bearing temperature sensors, belt alignment sensors, plug sensors and deflagration vents. Rubber belting is non-conductive.

4.2 DRAG CONVEYORS

Drag conveyors are provided with: Chain break detectors, speed sensor and plug detector

4.3 SCREW CONVEYUORS

Screw conveyors are provided with: Plug detectors

4.4 SCREENING STORAGE BINS

Screening storage bins are provided with: high level alarm and twin screw unloader that maintains product in the screws as a deflagration isolation device.

4.5 DUST COLLECTORS

Dust collectors are provided with: deflagration vents, backdraft dampers and rotary airlocks. Activation of a backdraft damper will initiate a full plant shutdown. Dust collectors are interlocked with conveying equipment, to ensure they are always operating when conveyances are in operation.

4.6 MOTORS AND ELECTRICAL COMPONENTS

Motors and electrical components are certified for the required hazardous location.

4.7 HOUSEKEEPING PROGRAM

The Owner will create and maintain a strong housekeeping program, to ensure dust accumulations. are kept below explosion limits.

5- EXITS AND FIREFIGHTING MEASURES

5.1 EXITS

Exits are provided in accordance with the National Building Code, with consideration given to the special and unusual nature of the facility, and low occupancy loadings.

5.2 PORTABLE FIRE EXTINGUISHERS

Portable fire extinguishers are provided as required by the National Fire Code and the Authority Having Jurisdiction.

5.3 FIRE HYDRANTS

Fire fighting in the grain cleaning addition will utilize hydrants provided in the fire loop for the main project.

The existing fire access road network will provide fire fighters access to the grain cleaning equipment. See FWS Drawings

5.4 DUST FILTER ACCESS

Dust filters are mounted at ground level for access by firefighters.

ATTACHMENT G

Preliminary Dust Hazard Analysis

FRASER
GRAIN TERMINAL

PROJECT PERMIT AMENDMENT

Preliminary Dust Hazard Analysis

Fraser Grain Terminal Project
VFPA Permit #15-041
June 8, 2020
FWS Job #09-20-001C
Revision 0

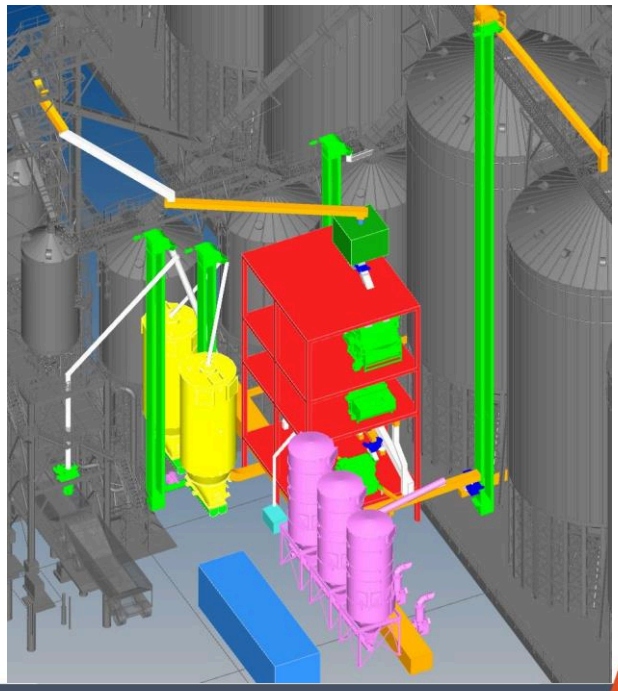

FWS THE CONFIDENCE BUILDERS

FWS GROUP OF COMPANIES

Fraser Grain Terminal

Preliminary Dust Hazard Analysis

TABLE OF CONTENTS

0- EXECUTIVE SUMMARY

A preliminary Dust Hazard Analysis (DHA) has been completed to establish design parameters for the grain cleaning equipment addition. This preliminary DHA reviews the process equipment, identifies the location of fire and explosion hazards, and indicates how these hazards are mitigated. Results of the preliminary DHA are summarized in a Table.

The grain cleaning addition is designed to clean wheat, oils seeds and pulses. All of these products are combustible, and their grain dust can be explosive when suspended in sufficient concentration. Because wheat dust is the most explosive of these products, the preliminary DHA, and design of fire an explosion mitigation measures, is based on wheat dust.

The primary locations for generation of grain dust are at bucket elevator inlets and shipping spout discharges.

1- PROCESS EQUIPMENT

1.1 BUCKET ELEVATOR

Grain dust is generated at the bucket elevator inlet, as grain is agitated by the buckets. This hazard is mitigated by the following design features:

- bucket elevator are fully enclosed to prevent fugitive dust emission
- dust collection is provided at inlets
- motor temperature, bearing temperature and belt alignment are monitored to prevent overheating
- discharge is monitored for plugging to prevent overload
- deflagration vents are provided to minimize the effect of any deflagration
- bucket elevator boot is equipment with cleanout gates, to prevent material buildup, and maintained as part of a housekeeping program

1.2 PRIMARY GRAIN CLEANERS – Scalperator and VDMC

Grain dust is aspirated by a dust system to separate light dust from the grain stream. This hazard is mitigated by the following design features:

- flow control devices in the machine to ensure dust removal
- dust collection is provided at inlets
- bearings are mounted exterior to the cleaner machine
- aspiration vents on the cleaners are provided to ensure constant airflow
- cleaners are installed in an area that is not enclosed, preventing opportunities for deflagration
- cleaner operation requires regular inspection and maintenance, to prevent material buildup, and maintained as part of a housekeeping program

1.3 SECONDARY GRAIN CLEANERS – Air Screening Machine

Grain dust is aspirated by a dust system to separate light dust from the grain stream. This hazard is mitigated by the following design features:

- flow control devices in the machine to ensure dust removal
- dust collection is provided at inlets
- bearings are mounted exterior to the cleaner machine
- aspiration vents on the cleaners are provided to ensure constant airflow
- cleaners are installed in an area that is not enclosed, preventing opportunities for deflagration
- cleaner operation requires regular inspection and maintenance, to prevent material buildup, and maintained as part of a housekeeping program

1.4 SECONDARY GRAIN CLEANERS – Sizing Machine

Incoming grain to this machine has all dust removed. This is a slow, gentle machine that generates no new dust. This hazard is mitigated by the following design features:

- Process removes all dust prior to entering machine
- bearings are mounted exterior to the cleaner machine
- cleaners are installed in an area that is not enclosed, preventing opportunities for deflagration
- cleaner operation requires regular inspection and maintenance, to prevent material buildup, and maintained as part of a housekeeping program

1.5 DRAG AND SCREW CONVEYORS

Minimal grain dust is generated at inlets and outlets of drag and screw conveyors. In accordance with NFPA standards and standard industry practice, dust collection is not provided on this equipment.

1.6 DUST COLLECTION SYSTEMS

Dust concentration within dust filters will reach explosive concentration. Deflagration vents, backdraft dampers and rotary airlocks are provided to minimize the effect of any deflagration, and to prevent it from propagating through the system. Fans and filters are provided with temperature sensors to prevent overheating.

1.7 SCREENING STORAGE BINS

Screening storage bins have deflagration vents installed to direct an explosion.

1.8 TRUCK LOADING SPOUT

Grain dust is generated where grain falls from the spout in to the truck. This is minimized by the use of a special dust-reducing loading spout, and dust collection is provided by the collection spout fan for the conveyor feeding the spout.

2- OPERATING AREAS

All areas in the grain cleaning addition are open to atmosphere, thus there is no possibility of grain dust reaching explosive concentrations. As none of the equipment is enclosed within a building or space, all electrical equipment is not classified. All internal areas of equipment is classified as Zone 22.