Stormwater Pollution Prevention Plan
Fraser Grain Terminal

Prepared for:
Fraser Grain Terminal Ltd.
355 Burrard St, Suite 640
Vancouver, BC V6C 2G8

Prepared by:
Hemmera Envirochem Inc.
18th Floor, 4730 Kingsway
Burnaby, BC V5H 0C6

File: 1866-001.01
June 2017

HEMMERA

TABLE OF CONTENTS

List of Tables

List of Figures

List of Appendices

1.0 INTRODUCTION

Hemmera was retained by Fraser Grain Terminal Ltd. (FGT) to prepare a Stormwater Pollution Prevention Plan (SPPP) for operation of the Proposed Fraser Grain Terminal Export Facility (the "Project") for the property located on 11060 Elevator Road in Surrey, BC (the "Site"). FGT is proposing to develop a new grain handling facility on land adjacent to the Fraser Surrey Docks (FSD) facility. It is anticipated that the SPPP will be routinely updated to reflect operational management of the site.

The Site is leased from Vancouver Fraser Port Authority (VFPA) by FGT and was formerly leased by Bekaert Canada Ltd. (Bekaert). Discussions will be held between CP Rail, Rabanco, and VFPA during the review period to define a lease agreement for the PARY track extension areas, as these are outside the FGT lease area. The Project will serve as a trans-shipment storage location for bulk grain products, and will include loading and unloading infrastructure, storage silos, a transfer tower and gallery, and ancillary works.

The purpose of this preliminary SPPP is to develop a pollutant control strategy to minimize the discharge of pollutants by stormwater runoff during operations by:

- Reducing the amount of stormwater discharged to the environment;
- Preventing or reducing the pollutant loading of stormwater; and,
- Treating or otherwise managing stormwater if pollutant loading cannot be prevented.

Mitigation for stormwater runoff during construction is addressed in the Project's Construction Environmental Management Plan.

Stormwater is water that originates from precipitation events (such as rainfall) and from snow and ice melt. Stormwater either ponds on the surface and eventually evaporates, infiltrates the ground, or flows over the ground surface as runoff, which ultimately enters nearby bodies of water. Stormwater runoff flows over land or impervious surfaces such as paved roadways, parking lots and building rooftops. As it flows, it may accumulate debris, soil and sediment, and contaminants that could negatively impact water quality.

This SPPP identifies Best Management Practices (BMP) which are considered sound, are relatively low in cost, and are applicable to a broad category of industries and types of pollutants. The BMPs discussed in this plan have been developed to improve the quality of stormwater discharged from the facility and to aid in the development, implementation, and evaluation of the SPPP.

This SPPP and associated drawings follow the outline presented in the VFPA guidance document, presents the background data that has been used, and any key design assumptions that have been made.

The SPPP also details the operation and maintenance activities that will be required for stormwater management. These will include regular surface sweeping, treatment unit maintenance intervals, and ongoing operations/processes. The implementation and monitoring component will include identification of key personnel, their responsibilities and contact information. Prior to the start of operations, the SPPP will be updated with an organizational chart indicating the role of the professional(s) responsible for managing, maintaining and ensuring stormwater pollution prevention. Where more than one role is involved, a brief summary of their key duties and role in stormwater pollution prevention will be provided.

This document has been prepared to support the FGT Application for a VFPA Project and Environmental Review permit and references other attachments of the Application, including the Spill Prevention, Emergency Response and Hazardous Material Management Plan **(Attachment 6)**.

2.0 PROJECT OVERVIEW

2.1 PROJECT LOCATION

The Site is located on the south bank of the Fraser River in Surrey at 11060 Elevator Road, approximately 3.5 km south of the Pattullo Bridge (see **Figure 1**).

2.2 PROJECT BACKGROUND

The Project will serve as a trans-shipment storage location for bulk grain products, and will include loading and unloading infrastructure, storage silos, a transfer tower and gallery, and ancillary works. Inbound agri-products will be delivered to the site via railcar. The majority of product will be temporarily stored in silos until a sufficient quantity is accumulated, at which point a cargo vessel will call at the site and be loaded with the stored product for delivery overseas. Agri-products will also leave the site via rail and truck to local markets and bulk containers for overseas markets.

The Site is approximately 10.35 ha (25 acres) in size, of which ~40% is covered by asphalt and buildings, while the remaining ~60% is comprised of road and rail, exposed soil, open water, and vegetated areas. . The topography of the site is relatively flat with a slight gradient (generally less than 1%) toward the east.

Existing stormwater infrastructure on site includes underground pipes, catch basins, manholes, culverts, and ditches (**Attachment 4:** Drawing 1419-G-05-410). A pond located on the east side of the Bekaert Production Building currently collects stormwater from the building, and is connected to the City of Surrey's stormwater system through a ditch (Ditch N; **Figure 1**). The pond also receives surface runoff from the east side of the site via a drainage system. The remaining surface runoff from the site is collected by the drainage system and conveyed to the ditch at the outlet of the pond (Ditch N; **Figure 1**).

For construction, the existing pond will continue to function as a sedimentation pond. All surface runoff from areas disturbed during construction will be directed to the pond. The pond will also receive construction waste water (e.g., from dewatering) for containment and treatment before offsite discharge to the City of Surrey's stormwater system. The Erosion and Sediment Control Plan to be implemented during construction of the Project is illustrated in Drawing 1419-C-05-405. Use of the existing sedimentation pond will be discontinued after construction.

The wharf is currently properly configured for stormwater management. However, installation of the water side rail supporting the shiploader will interrupt the current drainage path across the wharf. A drainage trench will be installed on the upland side of the rail to collect stormwater and direct to the Fraser River Drawings MA-DSK-1502, 1503, 1506 (Worley Parsons / Advisian).

3.0 SITE INVENTORY

3.1 ACTIVITIES

Construction of the Project is scheduled following receipt of Project approvals and after demolition of the existing Bekaert production building, and will take approximately 2 years (24 months) to complete.

Existing stormwater infrastructure includes a sump hole, catch basins, and manholes.

A large part of the existing site is covered by two large buildings that will be demolished prior to construction. The existing roof drainage system flows through the building into floor drains in the existing slab. Upon removal of the buildings, the floor drains will be retained so that overall surface drainage patterns will remain intact.

As the foundation slabs for the new silos will be constructed over the existing floor slab, the existing floor drains will become non-operational. The final site drainage system will be sequenced to occur near the end of construction to avoid damage during construction. During construction, a system of temporary flow barriers (e.g., asphalt curbs, sandbags, and wattles) will direct stormwater to the remaining utilities.

Typical operational process activities, and their potential inputs to stormwater are listed in **Table 1** below. Grain spillage will be swept up and disposed of as solid waste.

Table 1 Operational Processes with Potential Effects on Stormwater

#	Process	Duration/Details
1	Receiving (unloading of railcars.	• 309 days/annum • 7 hours/day • Grain spillage around receiving pit.
2	Transfer to storage.	• 309 days/annum • 7 hours/day • No spillage, all equipment is enclosed.
3	Reclaim from storage.	• 317 days/annum • Variable, up to 24 hours/day • No spillage, all equipment is enclosed.
4	Container loading.	• 253 days/annum • 10 hours/day • Spillage around loading area.
5	Railcar loading.	• 253 days/annum • 10 hours/day • Potential spillage around loading area.
6	Bulk truck loading.	• 253 days/annum • 10 hours/day • Potential spillage around loading area.
7	Ship loading.	• ≈63 days/annum • 24 hours/day • Potential spillage, but generally restricted to the vessel deck.

During Project operations, activities such as equipment maintenance may adversely affect stormwater quality due to accidental spills of maintenance fluids. Spill management for equipment maintenance is addressed in **Attachment 6**. Secondary activities listed below that have the potential to expose stormwater runoff to contaminants:

- Waste disposal;
- Fueling of vehicles;
- Routine servicing of equipment; and,
- Repair and maintenance activities.

3.2 MATERIALS

3.2.1 Fuels, Oils, Lubricants

Significant materials, as they relate to stormwater, include but are not limited to storage, cleaning, or waste products. The most likely materials the Project is expected to be on Site during Project operations and that may interact with stormwater are:

- Petroleum fuels (diesel and gasoline);
- Concrete (waste water, see below);
- Solid waste/garbage;
- Hydraulic and lubricating oils; and,
- Coolants and antifreeze such as ethylene glycol.

Storage and handling of petroleum products, fuels, oils, and lubricants, many of which are flammable, will comply with industry best practices and regulatory requirements of the BC *Workers Compensation Act*, regulations, and guidelines, including the Occupational Health and Safety Regulation, Workplace Hazardous Materials Information System (WHMIS), and the Workers' Compensation Board of British Columbia's Prevention Manual. The storage and handling of flammable substances must comply with:

- Occupational Health and Safety Regulation Part 5 – Chemical and Biological Substances, Flammable and Combustible Substances;
- Environmental Code of Practice for Above Ground Storage Tank Systems Containing Petroleum Products (Canadian Council of Ministers of the Environment (CCME, 1994);
- Environmental Code of Good Practice for Underground Storage Tank Systems Containing Petroleum Products and Allied Petroleum Products (CCME, 1993); and,
- National Fire Code (National Research Council).

Fuel handling and storage facilities will also comply with the provincial *Fire Services Act* and its regulations. All workers will adhere to established fire prevention and response protocols. Preparations will include spill response procedures, equipment and training, containment berms, and security. The storage facilities described will be used for both the construction and operations phases. Any spill or soil contamination occurring at storage facilities is subject to the BC *Environmental Management Act* and its regulations.

3.2.2 Contaminated Soils

At the completion of construction, stockpiles of contaminated soils will remain on Site and stabilized to reduce the risk of contaminating groundwater. It is anticipated that contaminated soil stockpiles will be stabilized, prior to the Contractor leaving the Site, as follows.

- Soil will be stockpiled and revegetated to prevent erosion and sediment generation;
- Stockpiles will be located in areas with a continuous impermeable surface;
- Stockpiles will be appropriately graded to prevent sediment run-off during periods of rainfall; and,
- Run-off from the stockpiles will not be allowed to enter catch basins.

3.2.3 Agri-Products

During unloading and loading operations, agri-products and associated particulate may accumulate at transfer points at the facility (e.g., around shiploader and the rail unloading facility). Accumulated agri-product may mix with stormwater run-off and be directed towards catch basins. Spilled product can adversely affect stormwater quality by increasing total suspended solids and/or biological oxygen demand. All stormwater from the facility will pass through the Site's main oil and grit separator unit (see **Section 5.1.6**) to capture spilled grain particulate.

3.3 HYDROLOGICAL ASSESSMENT

Environmental loads are as follows:

<u>Rainfall</u>

- 15 minutes - 10 mm
- One day - 128 mm
- Annual total - 1500 mm
- Annual total Ppn. – 1575 mm

<u>Ground Snow</u>

- Ss ground snow load 1 in 50 yr – 2.4 kPa
- Sr associated rain load 1 in 50 yr - 0.3 kPa

A hydrologic assessment was conducted for final Site design to estimate the runoff response, including peak flow rates and runoff volumes for various rainfall events. The design of the Site's stormwater management system will take into account the results of the hydrological assessment to ensure the stormwater infrastructure is appropriate for the Site. The basic hydrological parameters used to model hydrological properties of the permanent design are as follows:

- Total Catchment Area – 7.289 ha (72,890 m^2);
- Current design impervious –98%;
- Average slope – 1.0% to 2.0%;
- Time of concentration – Single discharge to the existing outfall is 15-30 minutes (used as input for Rational Method); and,
- Precipitation event – peak runoff rate is based on the 10 year, 24-hour storm with a rainfall intensity of 95 mm (based upon City of Surrey Engineering Department Design Criteria Manual).

3.3.1 Sub-catchment Areas

The Site is divided into sub-catchments based on the following aspects:

- Ground cover;
- Topography;
- Operational areas; or,
- Existing and/or proposed drainage features.

Drawing 1419-G-05-406 in **Attachment 4A** shows the sub-catchment areas.

4.0 ISSUES IDENTIFICATION AND RISK ANALYSIS

4.1 APPLICABLE STANDARDS, ACTS AND REGULATIONS

The following relevant legislation and standards are applicable, given the potential pollutant sources listed above:

- *Canada Fisheries Act* regarding the deposition of deleterious substance in waters frequented by fish.
- *Canada Shipping Act*, National Spill Response Protocol regarding the release of pollutants to the marine environment.
- *Canada Environmental Protection Act* regarding the management of harmful substances.
- *Canada Transportation of Dangerous Goods Act* – regarding the transportation of dangerous goods.
- Canadian Council of Ministers of the Environment (CCME) Guidelines relating to water quality standards.
- BC *Environmental Management Act,* regarding the unauthorized release of substances into the environment.
- BC *Environmental Management Act,* regarding the storage, handling, and disposal of hazardous materials and waste.

4.2 POTENTIAL POLLUTANT SOURCES

An assessment of the proposed Project operations was conducted to identify materials and practices that may reasonably be expected to add significant levels of pollutants to stormwater, or which may result in the discharge of pollutants during dry weather from the storm sewer draining the Site. The following provides a description of potential sources that may contribute to the presence of contaminants in stormwater runoff during operation and pathways for sources to reach sensitive receptors.

- Fuel, oil, or coolant from service vehicles could leak from the vehicle from damage, normal wear and tear, or during maintenance;
- Fuel could be dripped or spilled from diesel or gasoline fuel tanks during the fueling of service vehicles, during the filling of the tanks, or as a result of damage to the tanks;
- Hydraulic oil or lubricating oil could be spilled during maintenance activities, or from leaks in oil-filled equipment;
- Improper storage or accidental spills of fuels, oils, paints, greases, and cleaning solvents; and,
- Spilled agri-product.

Spill management is addressed in **Attachment 6.**

4.3 POTENTIAL SENSITIVE RECEPTORS

To date, there have been no stormwater issues identified in the Project's preliminary comment period by public, stakeholders, or First Nations. The Site is downslope of adjacent communities, and therefore stormwater effects are not anticipated to the public or First Nations.

The potential environmental receptors are described in the following sections. **Figure 1** shows aquatic habitat discussed below containing potential sensitive receptors that could be adversely affected by stormwater generated due to Project operations. **Table 2** summarizes watercourses potentially sensitive to stormwater. Additional detail is available in the Habitat Assessment Report (**Attachment 21**).

Table 2 Watercourses Potentially Affected by Site Stormwater Inputs

Watercourse Name	Watercourse Classification (Fraser River Estuary Management Program or City of Surrey)	Location
Fraser River shoreline	Low (FREMP)	The Fraser River shoreline borders the Site.
Unnamed Dashed Red-coded Ditch	Dashed Red, AO (CoS), Fish overwintering habitat	Parallels the south side of the Canadian National (CN) Railway tracks for roughly 100 m.
Robson Road Green-coded Ditch	Green, C (CoS) non-fish bearing	Ditch parallels the west side of Robson Road and is connected by culverts to Ditch N and Ditch S.
Bekaert Green-coded Ditch N	Green, C (CoS) non-fish bearing	Green-coded Ditch N is fed by surface water drainage from the site, as well as a constructed pond that collects surface water runoff and drain water from the Production Building.
Bekaert Green-coded Ditch S	Green, C (CoS) non-fish bearing	Ditch S connects with green-coded Ditch N and Robson Road ditch via culverts at its east end
Gunderson Slough	High productivity habitat (FREMP)	Located about 120 m south of the Site.
Shadow Brook	Red, A (CoS) year-round fish habitat	Shadow Brook runs under Robson Road and Elevator Road via a series of culverts, draining into Gunderson Slough approximately 100 m downstream of Elevator Road.
Armstrong Creek/Colliers Canal	Red, A (CoS) year-round fish habitat	Parallels the Burlington Northern Railway tracks west of the South Fraser Perimeter Road.
Unnamed Yellow-coded Ditch	Yellow, B (CoS) non-fish bearing but contributes to fish habitat	Parallels the west side of the CN railway tracks, and drains to red-coded Manson Canal, approximately 1.6 km northwest of the Site.

4.4 IDENTIFIED ISSUES

There will be no large tank-type bulk fuel storage on-site required for Project operations. The storage area for small amounts of fuels, coolants hydraulic oils and lubricating oils used for maintenance purposes will be in a centralized location having secondary containment. Given that the potential source for the release of these pollutants into the environment will be primarily during maintenance operations (either planned or from equipment failure), operations crews conducting the maintenance will immediately clean up and report all spills in accordance with the Project's Spill Prevention, Emergency Response and Hazardous Material Management Plan (**Attachment 6**).

4.5 IDENTIFIED POLLUTANT PATHWAYS

Pollutant pathways for the Site will be via the stormwater drainage system and overland sheet flow. During operations, most of the Site will be graded so that all rainfall and snow melt is directed to the Site's catch basins then to the Site's main oil and grit separator to discharge to the single existing outfall at the southwest corner of the Site. All of the wharf deck directs water towards the Fraser River. Runoff from the track extension areas along the eastern and southern borders of the Site will be directed to the green-coded ditches (i.e., Bekaert Ditch S and Robson Road Ditch).

A second potential pollutant pathway comes from the fueling area located near the empty container yard. This station is where FGT's fork lifts and top pick units will be refueled from a diesel fuel delivery vehicle. The fueling area will consist of a large, sloped catchment area with an impervious surface and a central, pre-cast catch basin. In order to capture any spilled fuel oil, the output from this basin will pass through a dedicated Type 3152 Oil Interceptor manufactured by Langley Concrete Group **(Appendix A)**. The outflow from this oil interceptor will then merge with the remainder of the stormwater drainage system and will eventually pass through the Site's main oil and water separator (see **Section 5.1.6**).

5.0 STORMWATER POLLUTION PREVENTION PLAN

5.1 MANAGEMENT STRATEGY

The Project's stormwater pollution prevention strategy is to implement a set of BMPs that will target the potential pollutant sources identified in **Section 4.2** of this plan. These practices will encompass prevention, containment/reduction, and treatment during the construction and operation phases. The risk for the introduction of chemical pollutants will be low with an effective implementation of the Spill Prevention, Emergency Response and Hazardous Material Management Plan (**Attachment 6**). Refer to the Construction Environmental Management Plan (**Attachment 20**) for additional mitigation measures specific to the construction period.

5.1.1 Drawings

Site drainage drawings are provided in **Attachment 4A** (Drawing 1419-G-05-406) and include:

- The boundaries for each sub-catchment;
- Unique identifiers for each sub-catchment;
- Pollutant occurrence within each sub-catchment;
- The stormwater drainage infrastructure;
- The stormwater drainage collection points;
- The stormwater drainage release points from the Site;
- Location of treatment units;
- Downstream receiving water bodies; and,
- Special features within the Site.

5.1.2 Good Housekeeping

Maintenance of work areas that may contribute pollutants to stormwater will be the most effective management practice for the Site. Good housekeeping practices are not only beneficial in terms of limiting exposure of materials to stormwater, but they also improve worker safety and often contribute to reducing losses of products thereby lowering operational or capital costs.

Good housekeeping will be practiced throughout the Site. All exposed areas of the Site will be maintained in a clean and orderly manner. Trash and other waste products are removed from the Site on a regular basis. Routine inspections are made to check that good housekeeping is being practiced.

Routine maintenance shall include:

- Surface sweeping in areas of agri-product accumulation following unloading of each train and loading of each ship; and
- Weekly sweeping in the truck and container loading areas, treatment unit maintenance intervals, and ongoing operations/processes.

5.1.3 Preventive Maintenance

All machinery working in the nearshore of the Fraser River must be in good working order. The Project will employ a preventive maintenance program that includes inspections, testing, maintenance, and repairs of facility equipment and systems whose failure could result in a non-stormwater discharge.

A table showing maintenance intervals by equipment type will be provided in the next version of this document (prior to operations). Ongoing operations and processes will also be described.

5.1.4 Containment/Reduction

All machinery working on the Site must be free of contaminants. All hazardous material (fuels, lubricants, oils, etc.) storage areas will be equipped with secondary containment to reduce the likelihood of stormwater to become contaminated by their contents. If the secondary containment accumulates stormwater, the water will be examined to ensure it is free of oil, foam, or discoloration prior to being drained.

In areas where solid contaminants could enter a waste water drain, the drain will be equipped with a screen to reduce the volume of solids allowed to enter the storm drain.

5.1.5 Spill Prevention and Response Procedures

Spill kits will be maintained in accessible locations on-site. Spill prevention and emergency response procedures are outlined in the Spill Prevention, Emergency Response and Hazardous Material Management Plan (**Attachment 6**).

5.1.6 Treatment

During operations, stormwater effluent will pass through the Site's main oil and grit separator prior to discharge. This separator will be a Cortech 11000 unit by Contech Engineered Solutions designed to remove sediment, total suspended solids, hydrocarbons and free oil from stormwater runoff. Based on CMC's calculations, this model is appropriately sized for the predicted storm events for the Site and will reduce the chance of discharging any sediment and/or oily contamination in the stormwater discharge. The manufacturer's specifications for the two types of separators are provided in **Appendix B** of this plan. Both of these units will be inspected regularly and cleaned, as required; the records will be passed on to the City of Surrey as required by the latter's by-laws.

6.0 IMPLEMENTATION AND MONITORING

6.1 IMPLEMENTATION AND MONITORING

All construction and operational staff will receive training on the contents of this plan to ensure they are able to properly assess conditions and activities that could impact stormwater quality at the facility, and who can also evaluate the effectiveness of the management practices. The training will clearly indicate that it is the responsibility of all staff to be able to recognize ineffective stormwater BMPs and to report them to their supervisor and/or site management.

6.2 ADAPTIVE MANAGEMENT AND CONTINUOUS IMPROVEMENT

A key process in the effective implementation of the SPPP is the ability to change mitigation measures or actions as site conditions warrant protecting stormwater quality. This approach, generally termed as 'adaptive management', is a planned and systematic process for continuously improving environmental management practices by learning about their outcomes.

To ensure continuous improvement for the stormwater system, the contents of this plan will be reviewed as required, as Site-specific stormwater conditions warrant.

If current BMPs are not working effectively or additional mitigation efforts are needed, then the SPPP will be updated and re-issued.

6.3 REPORTING UPDATES

The SPPP will be reviewed on an annual basis to determine whether updates are required.

The SPPP will be updated in the following instances:

- Change to Port requirements for SPPPs;
- New stormwater infrastructure is constructed;
- Significant changes in the Project operations; and/or
- Changes to Site sub-catchments.

7.0 CLOSURE

This Work was performed in accordance with Contract 403B Environmental Engineering Services for Permit Applications between Hemmera Envirochem Inc. ("Hemmera") and Parrish & Heimbecker c/o CMC Engineering and Management ("Client"), dated September 9th, 2015 ("Contract"). This Report has been prepared by Hemmera, based on fieldwork and desktop work conducted by Hemmera, for sole benefit and use by the Client and Fraser Grain Terminal Ltd. In performing this Work, Hemmera has relied in good faith on information provided by others, and has assumed that the information provided by those individuals is both complete and accurate. This Work was performed to current industry standard practice for similar environmental work, within the relevant jurisdiction and same locale. The findings presented herein should be considered within the context of the scope of work and Project terms of reference; further, the findings are time sensitive and are considered valid only at the time the Report was produced. The conclusions and recommendations contained in this Report are based upon the applicable guidelines, regulations, and legislation existing at the time the Report was produced; any changes in the regulatory regime may alter the conclusions and/or recommendations. Report prepared by:

Hemmera Envirochem Inc.

ORIGINAL SIGNED BY

Sarah Bowie, M.Sc., R.P.Bio
Qualified Environmental Profes.sional

Reviewed by:

ORIGINAL SIGNED BY

Robin Taylor, MRM, EP
Senior Environmental Assessment Manager

8.0 REFERENCES

CoD. 2003. Corporation of Delta. Delta timing windows for in-stream works. Second Edition. The Corporation of Delta, Delta, B.C. Available at http://www.corp.delta.bc.ca/assets/Environment/PDF/fish_amphib_delta_timing.pdf. Accessed October 2015.

CoD. 2015. Corporation of Delta - DeltaMap. iVAULT MapGuide 4.3. Municipal Website. Available at http://www.delta.ca/EN/main/residents/deltamap.html. Accessed October 2015.

COSMOS. 2015. City of Surrey Mapping Online System. Available at http://www.surrey.ca/city-services/665.aspx. Accessed October 2015.

Hemmera 2015. Spill Prevention and Emergency Response Plan. Prepared for CMC Engineering and Management Ltd.

Hemmera 2015. Draft Report - Biophysical Studies and Survey Report. Prepared for CMC Engineering and Management Ltd.

Hemmera 2017. Preliminary Draft Report – Construction Permit Application. Prepared for Fraser Grain Terminal Ltd.

FREMP (Fraser River Estuary Management Program). 2015. Burrard Inlet Environmental Action Program – Fraser River Estuary Management Program. FREMP – BIEAP Habitat Atlas. Available at http://www.cmnbc.ca/atlas_gallery/fremp-bieap-habitat-atlas. Accessed October 2015.

McPhail and Carveth 1994, iMap BC 2015, FISS 2015.

Vancouver Fraser Port Authority (PMV). 2014. PMV Land Use Plan Designation Maps – Planning Area 1. Available at http://www.portvancouver.com/wp-content/uploads/2016/09/G2016-097pa01_reduced.pdf. Accessed October 2016.

FIGURE

Construction Permit Application
Fraser Grain Terminal
11041 Elevator Road, Surrey, BC

Watercourse Classification Map

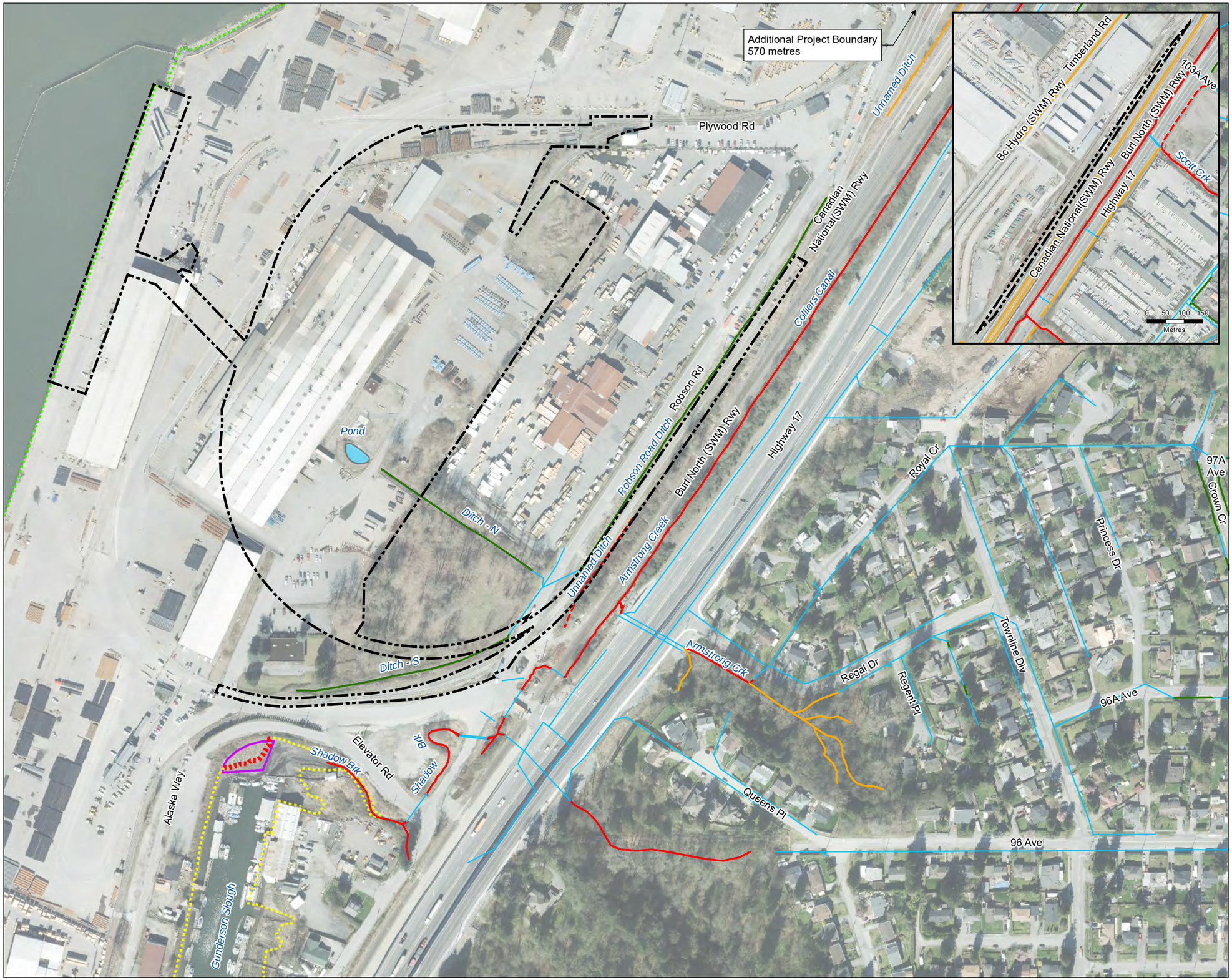

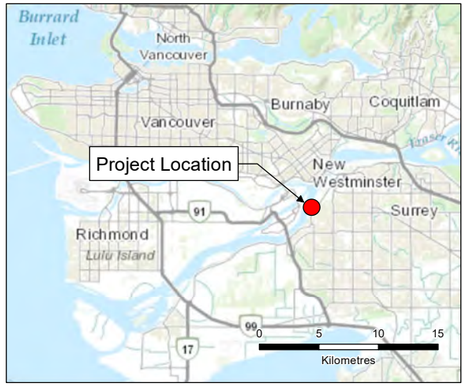

Legend

Site Boundary

City of Surrey Watercourse Classification

- A: Watercourse inhabited by fish year round
- AO: Watercourse inhabited by fish during the overwintering period
- B: Non-fish-bearing watercourse but contributes or potentially contributes significant food/nutrient inputs to downstream fish populations
- C: Non-fish-bearing watercourse that does not contribute significant food/nutrient value to downstream fish populations

Fraser River Estuary Management Program Habitat Classification

- High productivity habitat
- Moderate productivity habitat
- Low productivity habitat

Fraser River Estuary Management Program - Habitat Compensation Sites

- Gunderson Slough Habitat Bench

Drainage Mains

Notes

1. This map is not intended to be a "stand-alone" document, but a visual aid of the information contained within the referenced Report. It is intended to be used in conjunction with the scope of services and limitations described therein.

Sources

- Open Channels: City of Surrey Mapping Online System
- Habitat Classification & Compensation Sites: Fraser River Estuary Management Program
- Aerial Image: City of Surrey, 2014

N

1:3,000

0 50 100 150
Metres

NAD 1983 UTM Zone 10N

Page Size: 11" x 17"

1866-001.01	Production Date: Jun 20, 2017	Figure 1

HEMMERA

FGT FRASER GRAIN TERMINAL

Path: O:\1866\1866\001\0\Timed\SP\PP\Fig 1_1866_001_01_WatercourseClassification_170620.mxd

APPENDIX A
Oil Interceptor Under the Fueling Station

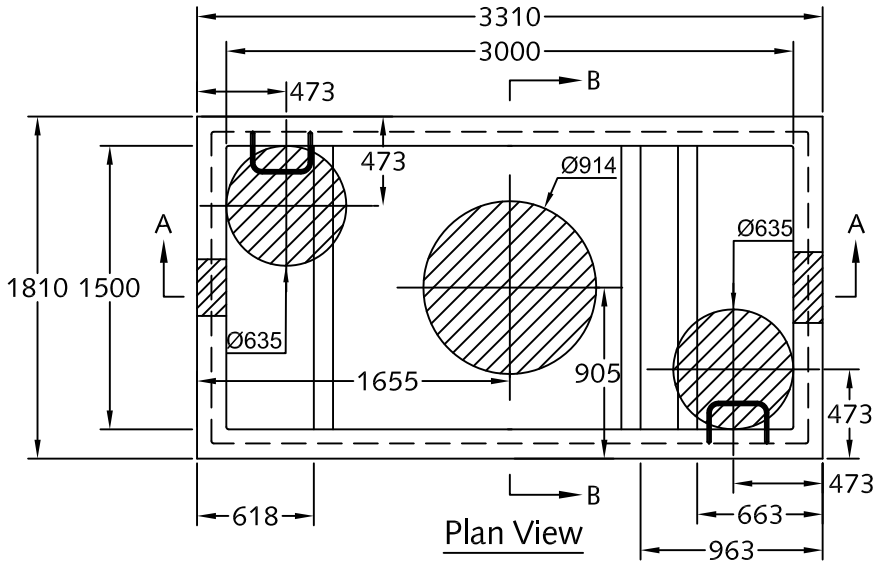

Plan View

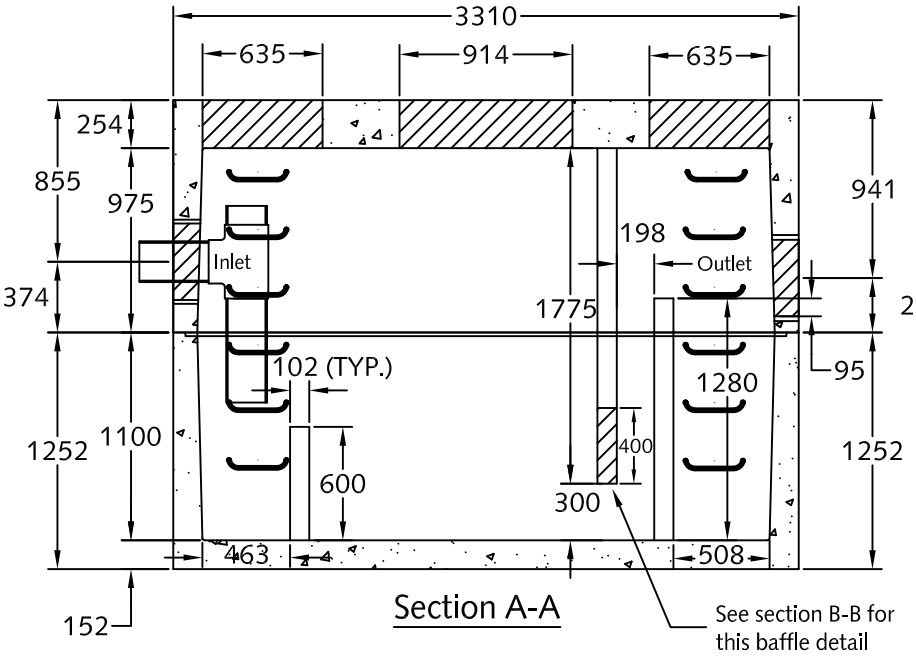

Section A-A

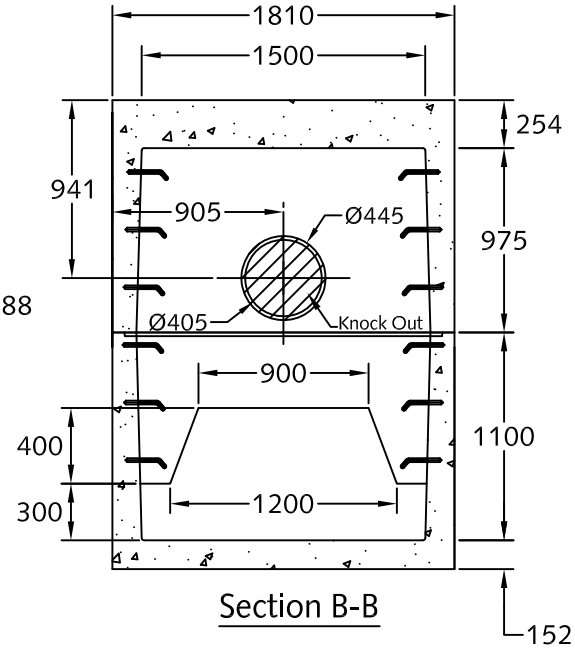

Section B-B

Notes:

1. 3152 Oil interceptor [API Style] manufactured to meet AASHTO HS20 live loading.
2. Unit dimensions are 3.0 x 1.5 x 2.0 m.
3. Reinforced concrete lid manufactured for AASHTO HS20 live loading.
4. Unit c/w knockout cores for inlet/outlets as shown.
5. Unit c/w 2-Ø635, 1-Ø914 mm opening for accesses as shown.
6. Oil interceptor c/w 102 mm thick concrete baffles as shown.
7. Unit has a maximum 5,580 liter [5.58 m³] capacity.
8. Unit c/w lifting inserts as required.
9. Unit c/w ladder rungs upon request.
10. PVC required by design, installed by others in field.
11. Design can be modified for specific application, please contact LCG sales office.
12. Approximate weight:
    - Top section: 7,840 kg.
    - Bottom section: 7,925 kg.
13. Minimum rebar yield strength: 414 MPa.
14. Minimum concrete strength: 35 MPa.
15. All dimensions are in millimeters.

THE Langley CONCRETE GROUP
The LANGLEY CONCRETE Group of Companies

DESCRIPTION:

3152 Oil Interceptor
[API Style]

www.langleyconcretegroup.com

DRAWN BY:	KS	ORIGIN:	CHWK
CHK BY:	JAO/SW	DWG NO:	3152-API-1.0
DATE:	FEB/24/2010	REV DATE:	3. NOV/01/2010
SCALE:	1:40		

LANGLEY (604) 533-1656 VICTORIA (250) 478-9581 CHILLIWACK 1-800 667-9600

APPENDIX B

Oil and Grit Separator at the Stormwater Exit from the Site

VORTECHS 11000 DESIGN NOTES

VORTECHS 11000 RATED TREATMENT CAPACITY IS 17.5 CFS, OR PER LOCAL REGULATIONS. IF THE SITE CONDITIONS EXCEED RATED TREATMENT CAPACITY, AN UPSTREAM BYPASS STRUCTURE IS REQUIRED.

THE STANDARD INLET/OUTLET CONFIGURATION IS SHOWN. FOR OTHER CONFIGURATION OPTIONS , PLEASE CONTACT YOUR CONTECH CONSTRUCTION PRODUCTS REPRESENTATIVE. www.ContechES.com

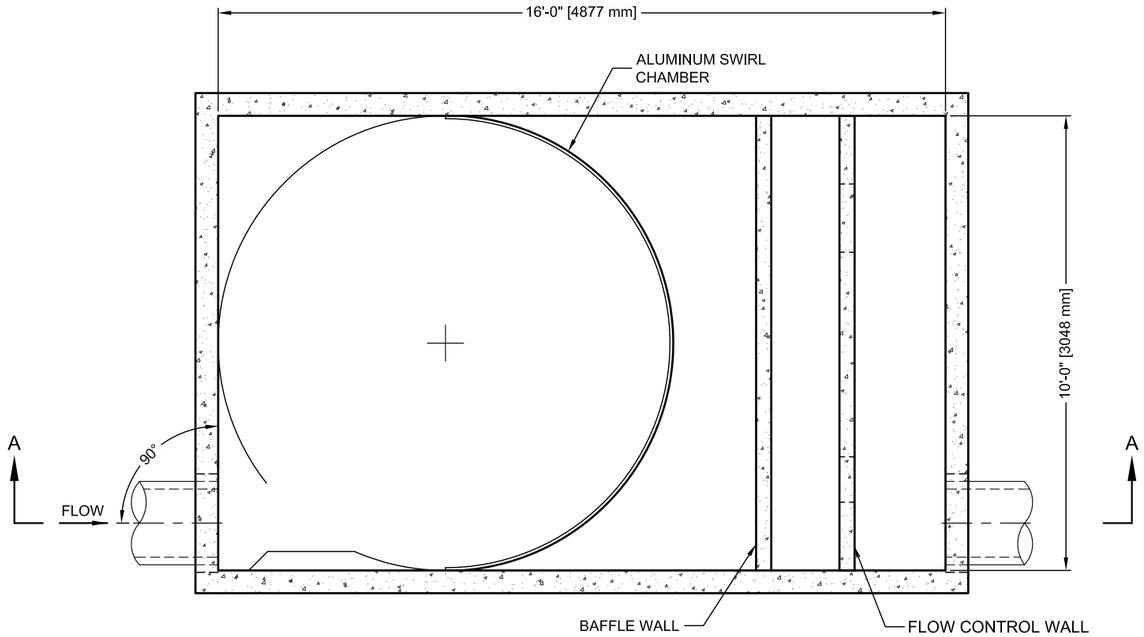

SECTION B-B

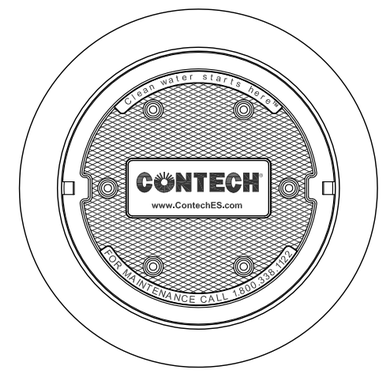

FRAME AND COVER

(DIAMETER VARIES)
N.T.S.

SITE SPECIFIC DATA REQUIREMENTS

STRUCTURE ID	*
WATER QUALITY FLOW RATE (CFS)	*
PEAK FLOW RATE (CFS)	*
RETURN PERIOD OF PEAK FLOW (YRS)	*

PIPE DATA:	I.E.	MATERIAL	DIAMETER
INLET PIPE 1	*	*	*
INLET PIPE 2	*	*	*
OUTLET PIPE	*	*	*

RIM ELEVATION	*

ANTI-FLOTATION BALLAST	WIDTH	HEIGHT
	*	*

NOTES/SPECIAL REQUIREMENTS:

* PER ENGINEER OF RECORD

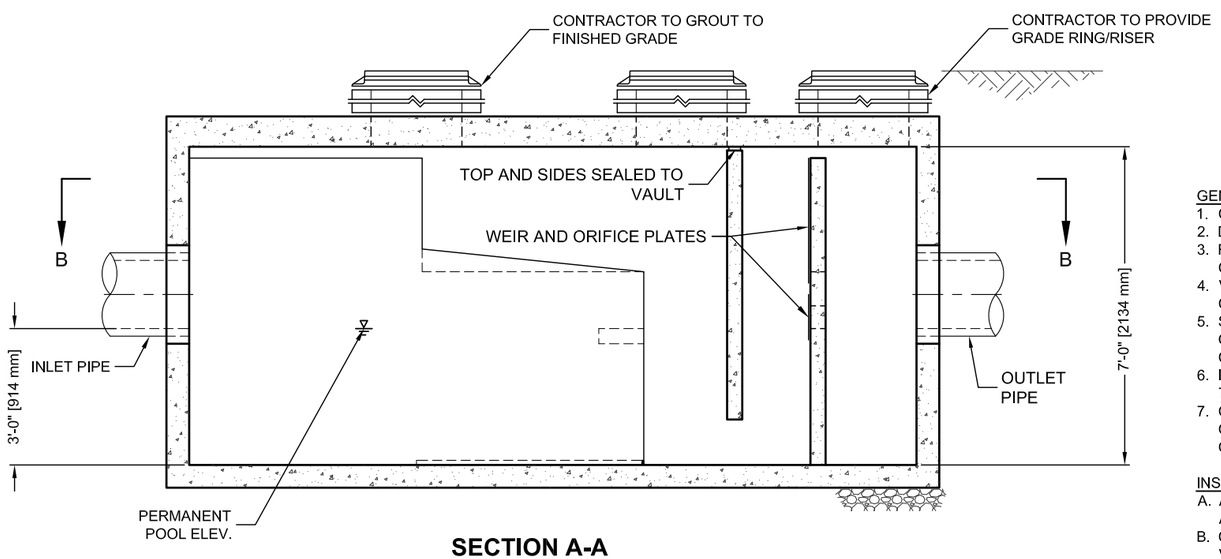

SECTION A-A

GENERAL NOTES

1. CONTECH TO PROVIDE ALL MATERIALS UNLESS NOTED OTHERWISE.
2. DIMENSIONS MARKED WITH ( ) ARE REFERENCE DIMENSIONS. ACTUAL DIMENSIONS MAY VARY.
3. FOR FABRICATION DRAWINGS WITH DETAILED STRUCTURE DIMENSIONS AND WEIGHT, PLEASE CONTACT YOUR CONTECH ENGINEERED SOLUTIONS LLC REPRESENTATIVE. www.ContechES.com
4. VORTECHS WATER QUALITY STRUCTURE SHALL BE IN ACCORDANCE WITH ALL DESIGN DATA AND INFORMATION CONTAINED IN THIS DRAWING.
5. STRUCTURE SHALL MEET AASHTO HS20 AND CASTINGS SHALL MEET AASHTO M306 LOAD RATING, ASSUMING GROUNDWATER ELEVATION AT, OR BELOW, THE OUTLET PIPE INVERT ELEVATION. ENGINEER OF RECORD TO CONFIRM ACTUAL GROUNDWATER ELEVATION.
6. INLET PIPE(S) MUST BE PERPEDICULAR TO THE VAULT AND AT THE CORNER TO INTRODUCE THE FLOW TANGENTIALLY TO THE SWIRL CHAMBER. DUAL INLETS NOT TO HAVE OPPOSING TANGENTIAL FLOW DIRECTIONS.
7. OUTLET PIPE(S) MUST BE DOWN STREAM OF THE FLOW CONTROL BAFFLE AND MAY BE LOCATED ON THE SIDE OR END OF THE VAULT. THE FLOW CONTROL WALL MAY BE TURNED TO ACCOMODATE OUTLET PIPE KNOCKOUTS ON THE SIDE OF THE VAULT.

INSTALLATION NOTES

A. ANY SUB-BASE, BACKFILL DEPTH, AND/OR ANTI-FLOTATION PROVISIONS ARE SITE-SPECIFIC DESIGN CONSIDERATIONS AND SHALL BE SPECIFIED BY ENGINEER OF RECORD.
B. CONTRACTOR TO PROVIDE EQUIPMENT WITH SUFFICIENT LIFTING AND REACH CAPACITY TO LIFT AND SET THE VORTSENTRY HS MANHOLE STRUCTURE (LIFTING CLUTCHES PROVIDED).
C. CONTRACTOR TO INSTALL JOINT SEALANT BETWEEN ALL STRUCTURE SECTIONS AND ASSEMBLE STRUCTURE.
D. CONTRACTOR TO PROVIDE, INSTALL, AND GROUT PIPES. MATCH PIPE INVERTS WITH ELEVATIONS SHOWN.
E. CONTRACTOR TO TAKE APPROPRIATE MEASURES TO ASSURE UNIT IS WATER TIGHT, HOLDING WATER TO FLOWLINE INVERT MINIMUM. IT IS SUGGESTED THAT ALL JOINTS BELOW PIPE INVERTS ARE GROUTED.

Vortechs®

THIS PRODUCT MAY BE PROTECTED BY THE FOLLOWING U.S. PATENT: 5,759,415; RELATED FOREIGN PATENTS.

CONTECH®
ENGINEERED SOLUTIONS LLC
www.ContechES.com
9025 Centre Pointe Dr., Suite 400, West Chester, OH 45069
800-338-1122 513-645-7000 513-645-7993 FAX

VORTECHS 11000
STANDARD DETAIL