FRASER SURREY DOCKS
DIRECT COAL TRANSFER FACILITY:
DRAFT AIR QUALITY MANAGEMENT PLAN

Prepared for:

FRASER SURREY DOCKS
Pacific Rim Stevedoring

11060 Elevator Road
Surrey, BC
V6P 3Y7

Prepared by:

Levelton Consultants Ltd.
150-12791 Clarke Place
Richmond, BC
Canada, V6V 2H9

Disclaimer

This report has been prepared in a working draft form and has not been finalised or formally reviewed. As such it should be taken as an indication only of the material and conclusions that will form the final report and management plan. Any calculation, findings, conclusions or opinions presented here are not necessarily those of Port Metro Vancouver and may be changed or altered. This draft report and associated management plan are intended for public review and comment.

Date: May 5th, 2013 **File:** EE12-1611-00

TABLE OF CONTENTS

LIST OF FIGURES

LIST OF TABLES

1. PURPOSE AND SCOPE

The purpose of the Air Quality Management Plan (AQMP) is to address the air quality management requirements relating to construction and operation of Fraser Surrey Docks (FSD) Direct Coal Transfer Facility.

Specifically, this AQMP describes the Best Management Practices (BMPs) that will be followed, where practical, during construction and operation of the Facility. Air quality monitoring and reporting commitments are also outlined in order to:

- Assess the effectiveness of the mitigation measures in place at the Facility and during transport of coal by barge to Texada Island, and take corrective actions to mitigate air quality concerns caused by FSD's operations; and,
- Confirm the results of the air quality assessment prepared for the Environmental Impact Assessment of the Facility which predicted low air quality impacts localized around the Facility and from the transport of coal by barge to Texada Island.

1.1 PRIMARY GUIDANCE DOCUMENTATION

The primary guidance documentation used in the development of the AQMP and the BMPs outlined in the AQMP are:

- *Best Practices for the Reduction of Air Emissions from Construction and Demolition Activities,* (Cheminfo, 2005); and,
- *BC Ministry of Energy and Mines, 2002. Aggregate Operators Best Management Practices Handbook for British Columbia. Volume II – Best Management Practices. April 2002.*

1.2 SECONDARY GUIDANCE DOCUMENTATION

Additional background information for the AQMP and the BMPs outlined in the AQMP are:

- *Direct Transfer Coal Facility: Construction Permit Application, Detailed Facility Information, Submitted for Approval to Port Metro Vancouver, June 15th, 2012; and,*
- *Fraser Surrey Docks Direct Coal Transfer Facility: Air Dispersion Modelling Assessment. Prepared for Fraser Surrey Docks, by Levelton Consultants Ltd. October 30th, 2012.*

2. REGULATORY CONSIDERATIONS

2.1 PORT METRO VANCOUVER

Port Metro Vancouver (PMV) requires a permit be obtained by FSD for the construction of the Facility. As part of the environmental review process to obtain the permit, FSD was required to conduct an air quality assessment of the Facility. The air quality assessment was based upon a number of mitigation measures being in place at the Facility. FSD has a commitment to meet those mitigation measures, which have been summarized in Section 6.

In addition to the mitigation measures planned for the Facility, FSD has committed to the following in discussions with PMV:

- Meteorological station near the barge loader (including an anemometer, rain gauge and temperature / relative humidity sensor);

- Particulate matter monitoring near the barge loader;
- Particulate matter monitoring station near the facility;
- Dust fall monitoring near the barge loader and facility; and,
- Nitrogen dioxide monitoring at the facility fenceline and near the facility.

Specific details regarding the monitoring program are provided in Section 7. The AQMP that follows outlines how each of these commitments will be met.

2.2 METRO VANCOUVER

The Facility will require an air permit from Metro Vancouver prior to the commencement of operations. Although permit requirements have been thoroughly reviewed and mitigation strategies are meant to reflect those that would be required under the Metro Vancouver permit, there may be unanticipated additional requests from Metro Vancouver. As a result, the air permit may require further monitoring or mitigation activities that are not outlined in this AQMP, at which time the AQMP would need to be revised to accommodate Metro Vancouver's additional requirements.

2.3 APPLICABLE LEGISLATION, REGULATION, GUIDELINES, OBJECTIVES AND STANDARDS

Legislation, regulations, guidelines, objectives and standards that are relevant to the AQMP are the following (see also Section 9 for full references):

- *British Columbia Environmental Management Act* (BC EMA, 2004) (forms the basis for provincial ambient air quality objectives)*;*
- *Canadian Environmental Protection Act* (CEPA, 2012) (forms the basis for federal ambient air quality objectives);
- Canadian Council of Ministers of the Environment (CCME, 2000) (Canada-wide standards for particulate matter and ozone);
- Applicable Metro Vancouver (Greater Vancouver Regional District (GVRD)) Air Quality Bylaws (GVRD, 2008) (forms the basis of Metro Vancouver's regional ambient air quality objectives);
- Federal and Provincial Air Quality Objectives and Standards - *Air Quality Objectives and Standards for British Columbia and Canada* (BC MOE, 2009);
- Metro Vancouver Air Quality Objectives – *Integrated Air Quality and Greenhouse Gas Management Plan* (Metro Vancouver, 2011); and,
- Relevant Occupational Health and Safety Requirements as outlined in British Columbia's Occupational Health and Safety Regulation (Worksafe, 2013).

3. SOURCES OF AIR EMISSIONS

Construction and operational activities for the Project could result in localized air quality impacts. Construction related impacts are generally of short-term duration but may still cause adverse air quality impacts. Potential air quality impacts relating to construction and operation include, but are not limited to: fugitive dust (particulate matter) and combustion emission from vehicles and equipment (e.g. from mobile and stationary diesel and gas powered equipment).

Common construction activities that result in fugitive dust emissions include, but are not limited to: excavation, pile driving, sandblasting, clearing, grubbing, aggregate handling, stockpiling, crushing, grading, compacting, paving, demolition of existing structures, the use of construction vehicles and equipment, etc.

Common construction activities that result is combustion emissions include, but are not limited to, mobile and stationary diesel and gas power equipment such as: drills, excavators, crawler tractors, loaders, graders, cranes, concrete trucks, dump trucks, generators, welding equipment, marine vessels, etc.

These sources form the general basis by which potential air quality impacts can be examined during the construction of the Project.

Operational emissions of concern are primarily fugitive dust sources that will be designed and constructed to incorporate mitigation measures. Fugitive dust sources include: rail transit, loaded and empty rail cars, coal receiving pits and conveyors, loading coal on barges, coal barge transit down Fraser River to Texada Island, and emergency stockpile use.

Operational combustion emission sources at FSD include: front end loaders, yard-switch engines and locomotives within the rail yard.

4. SENSITIVE RECEPTORS

Sensitive receptors (hospitals, schools and parks) surrounding FSD were identified in the air quality assessment. In the area closest to FSD, there are five (5) schools and four (4) public parks. Figure 4-1 shows the location of sensitive receptors closest to FSD.

The air quality monitoring program recommended in Section 7 for the Facility includes a particulate matter monitor and dust fall canister at the nearest resident location to the east which is considered to be the most appropriate monitoring location to represent maximum exposure to the community based on the air quality assessment (Levelton, 2012). Given the relative distances of the sensitive receptors in the area, and the predictions from the air quality assessment, it is reasonable to assume that monitoring at this location would represent the potential worst-case impacts from the Facility. The dust fall canister monitoring results at this location will also be used, as necessary, to determine potential impacts to nearby ecologically sensitive sites, such as Shadow Brook.

Additional monitoring will also be conducted as outline in Section 7.

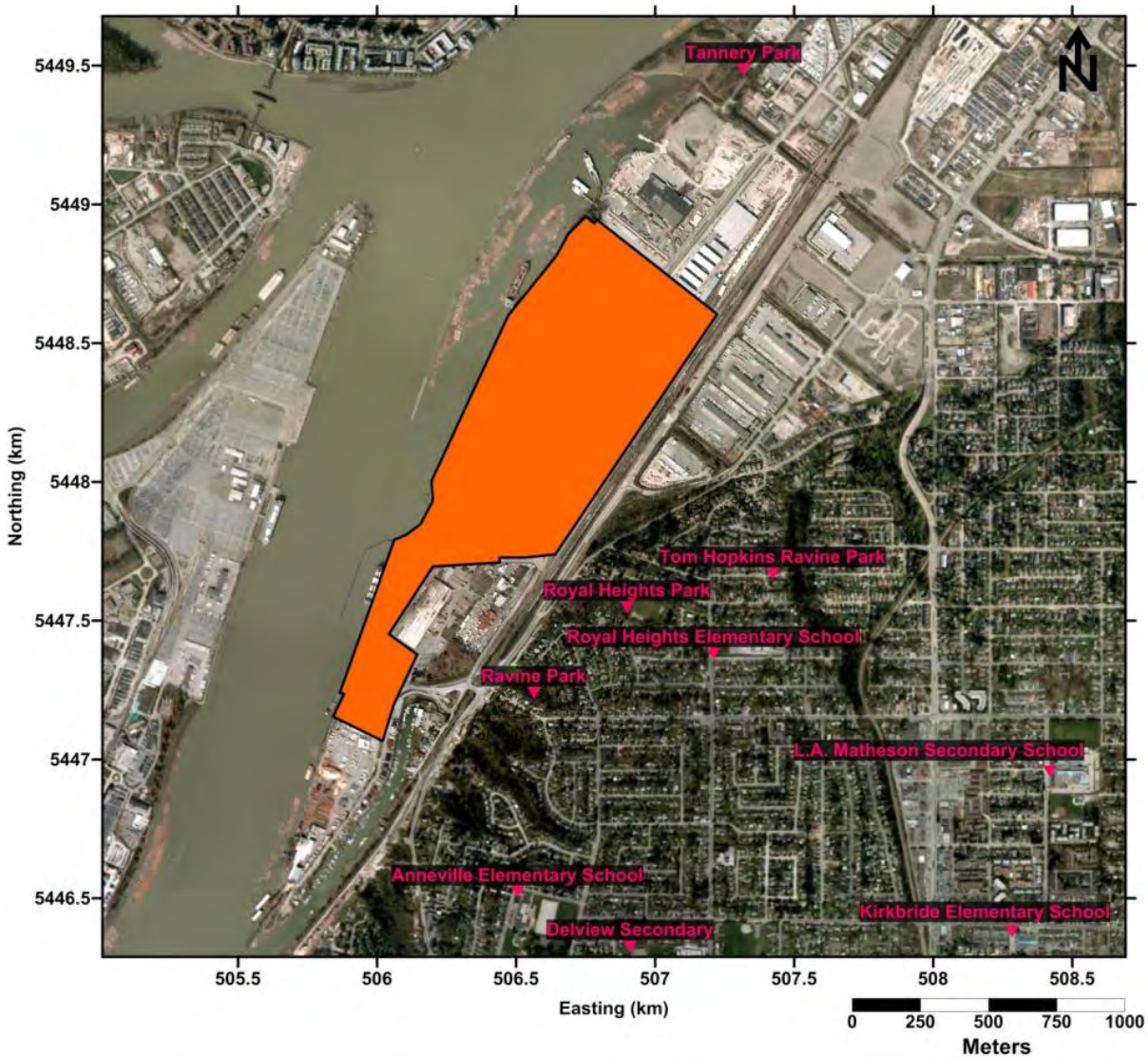

Figure 4-1 Location of sensitive receptors near FSD

5. CONSTRUCTION AIR QUALITY MANAGEMENT

5.1 BEST MANAGEMENT PRACTICES (BMPS)

This section provides a summary of BMPs that will be implemented to reduce fugitive dust and combustion related air emissions from construction and demolition activities related to the Project. For additional information please refer to *Best Practices for the Reduction of Air Emissions from Construction and Demolition Activities* (Cheminfo, 2005).

Required mitigation strategies contained within this plan will be incorporated into all contracts with all contractors. Contractors will be required to review, acknowledge and agree to the mitigation strategies and commit to compliance controls. Contractor performance will be monitored by management on an ongoing basis. Further details regarding construction monitoring is provided in Section 7.

5.2 FUGITIVE DUST

Fugitive dust and airborne particulate matter will be minimized and mitigated by implementing BMPs that include, but are not limited to, the following:

- Grade the construction site in phases, timed to coincide with the actual construction in that area;
- Start linear construction at the location that is upwind from the prevailing wind direction;
- Minimize the amount of clearing required to conduct the works;
- Minimize generation of road dust (e.g. minimize the time that unpaved surfaces are exposed and use watering and / or sweeping);
- Use wind fencing in construction areas that are frequently subjected to high winds;
- During dry conditions and when necessary, control dust sources (e.g. minimize the time that unpaved surfaces are exposed, water or cover potential dust sources, sweep paved surfaces);
- As necessary, use environmentally acceptable dust suppressants or water to control dust on access roads, lay-down areas, work areas, and disposal areas;
- Prefer the use of water for dust control, with consideration for water conservation, drainage and sediment control where appropriate;
- Do not use oils for dust control;
- Stabilize surfaces of completed earthworks and / or base areas with vegetation, stones, geotextile, mulch or other erosion resistant cover;
- Compact distributed soils;
- Reduce activities that create fugitive dust during windy conditions;
- Manage storage piles (e.g. by shaping them, installing enclosures or coverings around piles, conducting storage pile activities downwind of sensitive receptors);
- Control mud and dirt track-out from construction sites;
- Minimize drop height at material transfer locations (e.g. when loading soil onto haul trucks);
- Prohibit burning as a means of disposal of any organic or construction materials; and,
- Implement on-site vehicle restrictions (e.g. limit the speed of vehicles travelling on unpaved access / haul roads).

Based on experiences with similar construction projects, the Project Air Quality Specialists (Levelton Consultants Ltd.) also recommends limiting traffic speeds to 15 km/hr on unpaved roads, where practicable.

It is planned that these considerations will be reviewed by Levelton as part of visual site inspections that will occur during the air quality monitoring portions of the Project.

Air quality and dust fall monitoring will be conducted during the construction period as described in Section 7.

5.3 COMBUSTION EMISSIONS

Combustion emissions will be minimized and mitigated by implementing BMPs that include, but are not limited to, the following:

- Implement an anti-idling protocol (see Appendix A) for construction equipment and vehicles that requires equipment to be turned off, if practical and when not in use, unless continuous idling is required by the equipment operation specifications. Make use of best available technologies and practices to reduce emissions;
- Operate equipment at and within load tolerances and ratings;
- Ensure that all motorized equipment is in good working order and maintained to manufacturer's specifications;
- Comply with applicable regulation regarding heavy-duty diesel non-road equipment and other construction equipment (including Metro Vancouver's Non-Road Diesel Emission Regulation); and,
- Use grid power rather than locally generated power whenever practical to reduce emissions.

6. OPERATIONAL AIR QUALITY MANAGEMENT

6.1 BEST MANAGEMENT PRACTICES (BMPS)

This section provides a summary of BMPs to reduce fugitive dust and combustion related air emissions from operations at the Facility. The BMPs are those already included in the Permit Application submitted to PMV.

6.2 FUGITIVE DUST

Table 6-1 summarizes the source specific mitigation measures that will be in place during operations. The recommended BMPs focus on:

- Rail transit;
- Coal receiving pits and conveyors;
- Loading coal on barges;
- Barge transit down the Fraser River to Texada Island; and,
- Emergency stockpile use.

Appendix B provides an overview of the proposed dust suppression and wastewater management systems.

Table 6-1 Terminal Operation Process Mitigation Strategy – Air Quality

Item #	Activity Source	Type of Emission	Mitigation Strategy Description	Emission Monitored	Monitoring	Reporting	Non AQ Environmental Impacts
	Pre- Normal Operations – BASELINE	Fugitive Dust CACs	Baseline creation	Dust Fall TPM NO_2	Prior to the start of Operations, a "baseline level" particulate matter, dust fall and nitrogen dioxide monitoring program will be implemented to quantify the pre-project levels. This will provide a comparative reference for future monitoring. Two monitoring stations with Met One E- Samplers and dust fall canisters would be installed at least six months prior to Operations and take continual samples over that period. Air Quality Monitoring Station #1, or terminal monitoring station, will be located on the southwestern fence line of the facility within 10 m of the barge loader. The station would be fitted with a Met One E- Sampler and dust fall canister and will take continual samples of TPM and dust fall. The station will also be fitted with a meteorological monitoring station that would measure wind speed, wind direction, rainfall, temperature and relative humidity. Data would be monitored from the Met One E-Sampler and meteorological monitoring station in real time via a cellular modem. Data would be collected from the dust fall canister manually on a monthly basis. Air Quality Monitoring Station #2, the nearest resident monitoring station, will be fitted with a Met One E- Sampler and dust fall canister and will take continual samples of TPM and dust fall. The monitoring station would be installed less than 100 m from the western rail entrance to the rail yard adjacent to Shadowbrook Creek. Data would be monitored from the Met One E-Sampler in real time via cellular modem. Data would be collected from the dust fall canister manually on a monthly basis. Nitrogen dioxide would be tested using a hand held monitor on a monthly basis. TPM and dust fall concentrations can be analyzed by wind speed and direction to infer potential sources.	Once in operation, a written *Quarterly Air Quality Report* (by Levelton) summarizing the quarterly findings from both monitoring stations will be provided on a quarterly basis to PMV four to six weeks following the end of the quarter. The baseline data will be summarized and used for comparison to the ongoing air quality monitoring data in these reports. FSD will also post the report on their website. The *Quarterly Air Quality Report* will include the following: 1. Overview 2. Meteorological, Air Quality and Dust Fall Monitoring Data 2.1 Meteorological Monitoring Data This section will include average and maximum wind speed, wind roses, wind speed excursion above 19 km/h, total precipitation, maximum and minimum temperature for the previous quarter. 2.2 Air Quality Monitoring Data Summary of TPM (1-hour maximum, 24-hour average results and annual average results (when sufficient data become available) and nitrogen dioxide monitoring results (short-term average results collected by the handheld monitor). Ongoing air quality monitoring data will be compared to the baseline data collected. 2.3 Dust Fall Monitoring Data Monthly dust fall monitoring results reported based on compositional analysis (total and fixed residue and coal content) based on laboratory analysis. 3. Summary of Visual Site Inspection 3.1 FSD's Visual Site Inspections Summary of visual site inspections for the previous quarter which would include details of identified issues, recommendations, follow-up and resolution. 3.2 Levelton's Visual Site Inspections Summary of visual site inspections for the previous quarter which would include details of identified issues, recommendations, follow-up and resolution. 4. Summary of Complaints Summary from complaints logging system which would include details of any mitigation or follow-up actions required. 5. Corrective Action 6. Conclusion	N/A

Item #	Activity Source	Type of Emission	Mitigation Strategy Description	Emission Monitored	Monitoring	Reporting	Non AQ Environmental Impacts
						7. Closure 8. References Appendices (Dust Fall Laboratory Analysis, Visual Site Inspection Records, Water Application, Rail Anti-Idling Records, and Visual Opacity Training Records)	
1	***Normal Operations - Rail***						
	(a) Fully loaded unit train of approximately 125 cars enters Port Authority Rail Yard (PARY), split into 90 and 35 car blocks and placed into separate tracks 91 and 92 respectively. Process performed by four AC SD40 road power locomotives. After split, all four road power locomotives are placed into short holding track for storage.	CACs	All rail traffic entering and exiting the PARY will be governed to operate at less than 5 mph. FSD has mandated the rail carrier only utilize AC locomotives equipped with Variable Frequency Drives (VFD's). The newer technology provides the locomotive with the same amount of torque at lower speeds and reduced emissions. FSD has implemented an anti-idling policy within the PARY. Requires the rail carries to shut down the road power locomotives when it is known that the locomotive is not required for a period of 3 hours in duration or longer.	Dust Fall TPM NO_2	Although entry and exit speeds will not be verified, experienced FSD yard crews, if present upon train arrival, will be able to identify excessive speeds if present. Further to this, all road power locomotives brought into the yard will be confirmed to be AC with VFD's type by FSD yard crew. Issues with either case would be noted by the Rail Yard Foreman Daily Activity Log. Compliance of FSD's anti-idling policy in accordance with FSD's standard operating procedures will be monitored by FSD's yard crews and noted in the Rail Yard Foreman Daily Activity Log. Nitrogen dioxide would be tested using a hand held monitor on a monthly basis or more frequent as required. TPM and dust fall concentrations can be analyzed by wind speed and direction to infer potential sources.	General reporting of monitored over speeding, improperly fitted road power locomotives, and/or anti-idling infractions records of all operational checks will be logged and filed, and made available if requested. Noncompliance in any of these cases will trigger a Notice of Safety and Environmental Standards Letter to be sent by FSD's Environmental Sustainability Committee to the rail carrier. Nitrogen dioxide monitoring results (short-term average results collected by the handheld monitor) will be summarized quarterly by Levelton and issued as part of the *Quarterly Air Quality Report*. Ongoing air quality monitoring data will be compared to the baseline data collected.	Noise, Spills
		Fugitive Dust	To be compliant with the BNSF loading requirements, all customers will be required to contractually commit to: - Applying a veneer suppressant at mines pre departure (binds the surface particles together to provide a membrane that is resistant to dust lift off) - Applying an anti-dusting body agent at mines pre departure (binds the majority of fines to larger particulates to the entire body of coal entering rail car) - Profiling coal loads in accordance with the BNSF loading template - Removing excess coal on wagon sills by using a car sill brush	Dust Fall TPM	Air Quality Monitoring Station #1 will take continual samples of TPM and dust fall. Data would be monitored from the Met One E-Sampler and meteorological monitoring station in real time via a cellular modem. Data would be collected from the dust fall canister manually on a monthly basis. Air Quality Monitoring Station #2 will take continual samples of TPM and dust fall. Data would be monitored from the Met One E-Sampler in real time via a cellular modem. Data would be collected from the dust fall canister manually on a monthly basis.	*Quarterly Air Quality Report* as summarized above.	Noise, Spills
	b) A 900 HP yard locomotive splits the 90 and 35 loaded rail car into six blocks of 24 cars or five blocks of 24 cars (depending on yard availability) onto yard holding tracks.	Fugitive Dust	To be compliant with the BNSF loading requirements, all customers will be required to contractually commit to: - Applying a veneer suppressant at mines pre departure (binds the surface particles together to provide a membrane that is resistant to dust lift off) - Applying an anti-dusting body agent at mines pre departure (binds the majority of fines to larger particulates to the entire body of coal entering rail car) - Profiling coal loads in accordance with the BNSF loading template - Removing excess coal on wagon sills by using a car sill brush.	Dust Fall TPM	Air Quality Monitoring Station #1 will take continual samples of TPM and dust fall. Data would be monitored from the Met One E-Sampler and meteorological monitoring station in real time via a cellular modem. Data would be collected from the dust fall canister manually on a monthly basis. Air Quality Monitoring Station #2 will take continual samples of TPM and dust fall. Data would be monitored from the Met One E-Sampler in real time via a cellular modem. Data would be collected from the dust fall canister manually on a monthly basis.	*Quarterly Air Quality Report* as summarized above.	Noise, Spills
		CACs	All rail traffic working the PARY or Terminal will be governed to operate at less than 3 mph. FSD has implemented an anti-idling policy. Requires the shutdown of the yard locomotives when it is known that the locomotive is not required for a period of 3 hours in duration or longer and the temperature is greater than -3 degrees Celsius.	NO_2 TPM Dust Fall	Nitrogen dioxide would be tested using a hand held monitor on a monthly basis or more frequent as required. TPM and dust fall concentrations can be analyzed by wind speed and direction to infer potential sources. Air Quality Monitoring Station #1 will take continual samples of TPM and dust fall. Data would be monitored from the Met One E-Sampler and meteorological monitoring station in real time via a cellular modem. Data would be collected from the dust fall canister manually on a monthly basis.	*Quarterly Air Quality Report* as summarized above.	Noise, Spills

Item #	Activity Source	Type of Emission	Mitigation Strategy Description	Emission Monitored	Monitoring	Reporting	Non AQ Environmental Impacts
					Air Quality Monitoring Station #2 will take continual samples of TPM and dust fall. Data would be monitored from the Met One E-Sampler in real time via a cellular modem. Data would be collected from the dust fall canister manually on a monthly basis.		
	(b) A 900 HP yard locomotive shuttles a single block of 24 cars from PARY clockwise onto coal rail loop on the terminal for unloading.	Fugitive Dust	To be compliant with the BNSF loading requirements, all customers will be required to contractually commit to: - Applying a veneer suppressant at mines pre departure (binds the surface particles together to provide a membrane that is resistant to dust lift off) - Applying an anti-dusting body agent at mines pre departure (binds the majority of fines to larger particulates to the entire body of coal entering rail car) - Profiling coal loads in accordance with the BNSF loading template - Removing excess coal on wagon sills by using a car sill brush.	Dust Fall TPM	Air Quality Monitoring Station #1 will take continual samples of TPM and dust fall. Data would be monitored from the Met One E-Sampler and meteorological monitoring station in real time via a cellular modem. Data would be collected from the dust fall canister manually on a monthly basis. Air Quality Monitoring Station #2 will take continual samples of TPM and dust fall. Data would be monitored from the Met One E-Sampler in real time via a cellular modem. Data would be collected from the dust fall canister manually on a monthly basis.	*Quarterly Air Quality Report* as summarized above.	Noise, Spills
		CACs	All rail traffic working the Port Authority Rail Yard or Terminal will be governed to operate at less than 3 mph. FSD has implemented an anti-idling policy. Requires the shutdown of the yard locomotives when it is known that the locomotive is not required for a period of 3 hours in duration or longer and the temperature is greater than -3 degrees Celsius.	NO_2 TPM Dust Fall	Nitrogen dioxide would be tested using a hand held monitor on a monthly basis or more frequent as required. TPM and dust fall concentrations can be analyzed by wind speed and direction to infer potential sources. Air Quality Monitoring Station #1 will take continual samples of TPM and dust fall. Data would be monitored from the Met One E-Sampler and meteorological monitoring station in real time via a cellular modem. Data would be collected from the dust fall canister manually on a monthly basis. Air Quality Monitoring Station #2 will take continual samples of TPM and dust fall. Data would be monitored from the Met One E-Sampler in real time via a cellular modem. Data would be collected from the dust fall canister manually on a monthly basis.	*Quarterly Air Quality Report* as summarized above.	Noise, Spills
	(c) The block of 24 loaded rail cars are indexed via electric positioner and bottom dumped	Fugitive Dust	Cars will be shunted through the two bottom dump receiving pits via an electric positioner (an indexer), which does not release any emissions. Water mist/fog system will be projected directly at both sides and tops of both bottom dump rail car unloading pits. There are three spray bars, one on each side and one on top, equipped with several nozzles at appropriate distances to ensure complete coverage. The system is automatically triggered by the railcar movement and will apply a steady mist to all areas receiving coal during the entire unloading process. Receiving pits will be within a covered structure, except for the opening at either end for the train to enter/exit.	Dust Fall TPM	Air Quality Monitoring Station #1 will take continual samples of TPM and dust fall. Data would be monitored from the Met One E-Sampler and meteorological monitoring station in real time via a cellular modem. Data would be collected from the dust fall canister manually on a monthly basis. Air Quality Monitoring Station #2 will take continual samples of TPM and dust fall. Data would be monitored from the Met One E-Sampler in real time via a cellular modem. Data would be collected from the dust fall canister manually on a monthly basis.	*Quarterly Air Quality Report* as summarized above.	Noise, Spills
	(d) A 900 HP yard locomotive shuttles a single block of 24 empty cars clockwise from receiving pits on coal rail loop in the terminal back to the PARY	Fugitive Dust	The exterior sides and top of the empty cars will be automatically sprayed to remove any remaining coal after leaving dumper pit shed enclosure at a defined wash car station. The spray device is configured in a "U" shape up either side and across the top with nozzles at specific intervals to ensure full coverage. The spray device is automatically triggered from a sensor that recognizes movement of the railcar.	Dust Fall TPM	Air Quality Monitoring Station #1 will take continual samples of TPM and dust fall. Data would be monitored from the Met One E-Sampler and meteorological monitoring station in real time via a cellular modem. Data would be collected from the dust fall canister manually on a monthly basis. Air Quality Monitoring Station #2 will take continual samples of TPM and dust fall. Data would be monitored from the Met One E-Sampler in real time via a cellular modem. Data would be collected from the dust fall canister manually on a monthly basis.	*Quarterly Air Quality Report* as summarized above.	Noise

Item #	Activity Source	Type of Emission	Mitigation Strategy Description	Emission Monitored	Monitoring	Reporting	Non AQ Environmental Impacts
		CACs	All rail traffic working the Port Authority Rail Yard or Terminal will be governed to operate at less than 3 mph. FSD has implemented an anti-idling policy. Requires the shutdown of the yard locomotives when it is known that the locomotive is not required for a period of 3 hours in duration or longer and the temperature is greater than -3 degrees Celsius.	NO_2 TPM Dust Fall	Nitrogen dioxide would be tested using a hand held monitor on a monthly basis or more frequent as required. TPM and dust fall concentrations can be analyzed by wind speed and direction to infer potential sources. Air Quality Monitoring Station #1 will take continual samples of TPM and dust fall. Data would be monitored from the Met One E-Sampler and meteorological monitoring station in real time via a cellular modem. Data would be collected from the dust fall canister manually on a monthly basis. Air Quality Monitoring Station #2 will take continual samples of TPM and dust fall. Data would be monitored from the Met One E-Sampler in real time via a cellular modem. Data would be collected from the dust fall canister manually on a monthly basis.	*Quarterly Air Quality Report* as summarized above.	Noise, Spills
	(e) A 900 HP yard locomotive builds the 90 and 35 empty rail car from the six blocks of 24 cars onto two splits of 90 and 35 cars onto yard holding tracks 91 and 92 respectively.	Fugitive Dust	Empty rail cars will have been washed.	Dust Fall TPM	Air Quality Monitoring Station #1 will take continual samples of TPM and dust fall. Data would be monitored from the Met One E-Sampler and meteorological monitoring station in real time via a cellular modem. Data would be collected from the dust fall canister manually on a monthly basis. Air Quality Monitoring Station #2 will take continual samples of TPM and dust fall. Data would be monitored from the Met One E-Sampler in real time via a cellular modem. Data would be collected from the dust fall canister manually on a monthly basis.	*Quarterly Air Quality Report* as summarized above.	Noise
		CACs	All rail traffic working the PARY or Terminal will be governed to operate at less than 3 mph. FSD has implemented an anti-idling policy. Requires the shutdown of the yard locomotives when it is known that the locomotive is not required for a period of 3 hours in duration or longer and the temperature is greater than -3 degrees Celsius.	NO_2 TPM Dust Fall	Nitrogen dioxide would be tested using a hand held monitor on a monthly basis or more frequent as required. TPM and dust fall concentrations can be analyzed by wind speed and direction to infer potential sources. Air Quality Monitoring Station #1 will take continual samples of TPM and dust fall. Data would be monitored from the Met One E-Sampler and meteorological monitoring station in real time via a cellular modem. Data would be collected from the dust fall canister manually on a monthly basis. Air Quality Monitoring Station #2 will take continual samples of TPM and dust fall. Data would be monitored from the Met One E-Sampler in real time via a cellular modem. Data would be collected from the dust fall canister manually on a monthly basis.	*Quarterly Air Quality Report* as summarized above.	Noise, Spills
	(f) Rail carrier rebuilds full unit train of empties from two splits. Process performed by four AC SD40 road power locomotives that parked. Full unit train departs PARY with two road power locomotives on the front and tail end respectively.	CACs	All rail traffic entering and exiting the PARY will be governed to operate at less than 5 mph. FSD has mandated the rail carrier only utilize AC locomotives equipped with VFD's. The newer technology provides the locomotive with the same amount of torque at lower speeds and reduced emissions. FSD has implemented an anti-idling policy within the PARY. Requires the rail carries to shut down the road power locomotives when it is known that the locomotive is not required for a period of 3 hours in duration or longer.	NO_2 TPM Dust Fall	Although entry and exit speeds will not be verified, experienced FSD yard crews, if present upon train arrival, will be able to identify excessive speeds if present. Further to this, all road power locomotives brought into the yard will be confirmed to be AC with VFD's type by FSD yard crew. Issues with either case would be noted by the Rail Yard Foreman Daily Activity Log. Compliance of FSD's anti-idling policy in accordance with F SD's standard operating procedures will be monitored by FSD's yard crews and noted in the Rail Yard Foreman Daily Activity Log. Nitrogen dioxide would be tested using a hand held monitor on a monthly basis or more frequent as required. TPM and dust fall concentrations can be analyzed by wind	General reporting of monitored over speeding, improperly fitted road power locomotives, and/or anti-idling infractions records of all operational checks will be logged and filed, and made available if requested. Noncompliance in any of these cases will trigger a Notice of Safety and Environmental Standards Letter to be sent by FSD's Environmental Sustainability Committee to the rail carrier. Nitrogen dioxide monitoring results (short-term average results collected by the handheld monitor) will be summarized quarterly by Levelton and issued as part of the *Quarterly Air Quality Report*. Ongoing air quality monitoring data will be compared to the baseline data collected.	Noise, Spills

Item #	Activity Source	Type of Emission	Mitigation Strategy Description	Emission Monitored	Monitoring	Reporting	Non AQ Environmental Impacts
					speed and direction to infer potential sources.		
		Fugitive Dust	Empty rail cars will have been washed.	Dust Fall TPM	Air Quality Monitoring Station #1 will take continual samples of TPM and dust fall. Data would be monitored from the Met One E-Sampler and meteorological monitoring station in real time via a cellular modem. Data would be collected from the dust fall canister manually on a monthly basis. Air Quality Monitoring Station #2 will take continual samples of TPM and dust fall. Data would be monitored from the Met One E-Sampler in real time via a cellular modem. Data would be collected from the dust fall canister manually on a monthly basis.	*Quarterly Air Quality Report* as summarized above.	Noise
2	***Normal Operations – Transfer Process to Barge Loading***						
	(a) Coal dump from rail.	Fugitive Dust	Water mist/fog system will be projected directly at both sides and tops of both bottom dump rail car unloading pits. There are three spray bars, one on each side and one on top, equipped with several nozzles at appropriate distances to ensure complete coverage. The system is automatically triggered by the railcar movement and will apply a steady mist to all areas receiving coal during the entire unloading process. Receiving pits will be within a covered structure, except for the opening at either end for the train to enter/exit. Drop height will be less than 1 m. FSD's Environmental Coordinator will conduct visual opacity readings, a "visual determination of fugitive emissions from material processing sources" during every barge loading operation. The Environmental Coordinator can authorize the shutdown of the barge loading operation, or any other operation, should visual observations of emissions indicate an opacity of > 20%.	Dust Fall TPM	Air Quality Monitoring Station #1 will take continual samples of TPM and dust fall. Data would be monitored from the Met One E-Sampler and meteorological monitoring station in real time via a cellular modem. Data would be collected from the dust fall canister manually on a monthly basis. Air Quality Monitoring Station #2 will take continual samples of TPM and dust fall. Data would be monitored from the Met One E-Sampler in real time via a cellular modem. Data would be collected from the dust fall canister manually on a monthly basis. FSD's Environmental Coordinator will conduct visual opacity readings, a "visual determination of fugitive emissions from material processing sources" during every barge loading operation. They will advise the Director of Maintenance and Engineering of any issues and will make recommendations to remedy potential air quality issues. Levelton will conduct visual site inspections during each monthly air quality monitoring site visit.	*Quarterly Air Quality Report* as summarized above. FSD's Environmental Coordinator will prepare a monthly report to the Director of Engineering. The report will include: 1. Any issues noted 2. Recommendations to remedy potential air quality issues 3. Further mitigation measures aimed at preventing potential fugitive dust issues 4. Feedback on the results of past mitigation strategies implemented This report can be made available upon request.	Grey Water Management, Leachate
	(b) Transfer of Coal along Conveyors Eight conveyor segments: - Quad receiving conveyors (4) exiting the dual receiving pits - Dual out feed conveyors (2) from the quad conveyors - Single feed conveyor - Single barge loading conveyor Three transfer points: - Quad receiving	Fugitive Dust	All conveyors will be covered on the top and sides with steel sheeting to prevent coal or dust from exiting. All transfer points from one conveyor to the other will be fully enclosed on all four sides, top and bottom. In addition, all transfer points will be equipped with water/misting spray that is automatically applied on a continual basis while system is in operation. A spray bar is located above the conveyor and has several nozzles at appropriate distances to ensure complete coverage. Transfer points are also equipped with washdown equipment used for cleaning out the system. Coal on conveyors will be mechanically profiled to not exceed belt edge height to limit exposure to air flow. Profiling is accomplished through the use of a steel plate at the designated height to shape the coal as it passes by. Water spray will automatically be applied at each transfer point between conveyors on a continual basis while system is in operation. The spray bar	Dust Fall TPM	Air Quality Monitoring Station #1 will take continual samples of TPM and dust fall. Data would be monitored from the Met One E-Sampler and meteorological monitoring station in real time via a cellular modem. Data would be collected from the dust fall canister manually on a monthly basis. Air Quality Monitoring Station #2 will take continual samples of TPM and dust fall. Data would be monitored from the Met One E-Sampler in real time via a cellular modem. Data would be collected from the dust fall canister manually on a monthly basis.	*Quarterly Air Quality Report* as summarized above.	Leachate

Item #	Activity Source	Type of Emission	Mitigation Strategy Description	Emission Monitored	Monitoring	Reporting	Non AQ Environmental Impacts
	conveyors to dual out feed conveyors - 100 mt Surge hopper - Dual out conveyors to single feed conveyor - Single feed conveyor to barge loader		is located above the conveyor and has several nozzles at appropriate distances to ensure complete coverage. Dust suppression technology will be incorporated into the design of the transfer point chutes. Use of dust limiting shapes such as curved chutes or drop limiting devices such as baffles, belt skirting and shrouds to reduce the amount of turbulence and wind which increases exposure to air and can create dust.				
	(c) Coal loaded onto barge	Fugitive Dust	Coal drop heights will be limited through the use of a variable height (lufting) loader to reduce the ability for the product to catch wind and create dust. The loader will be covered to contain the product and reduce emissions. A short directional snorkel off the end of barge loader will be used to reduce turbulence of the product and drop height which eliminates the ability for the product to separate or catch wind and create dust. The snorkel will be enclosed to contain the product and reduce emissions. The adjustable barge loader will be used to shape the coal pile on the barge such that it is slightly rounded and not peaked to reduce the ability of the coal to catch wind and create dust. The barge loader will be manually controlled and the operator will move the unit side to side, forward and back to flatten out the coal. In response to dust generation, and when weather conditions are expected to lead to dust generation (days with no precipitation, sunny conditions, winds greater than 19 km/hr), water will be applied to wet the coal as it is loaded onto the barge and when the barge is sitting at the berth awaiting departure. The trigger value for spraying the barges has been adapted from other bulk terminals, and will be evaluated on a continual basis. Application will be via a manually operated spray halo installed on the tip of the barge loader and a series of manually operated rain birds along the berth face. Operations will shut down the barge loading operation in periods of winds in excess of 40 km/hr on a sustained basis of more than 5 minutes. This operational cut-off value has been adapted from other bulk terminals, and will be evaluated on a continual basis. FSD's Environmental Coordinator will conduct visual opacity readings, a "visual determination of fugitive emissions from material processing sources" during every barge loading operation. The Environmental Coordinator can authorize the shutdown of the barge loading operation, or any other operation, should visual observations of emissions indicate an opacity of > 20%.	Dust Fall TPM	Air Quality Monitoring Station #1 will take continual samples of TPM and dust fall. Data would be monitored from the Met One E-Sampler and meteorological monitoring station in real time via a cellular modem. Data would be collected from the dust fall canister manually on a monthly basis. Air Quality Monitoring Station #2 will take continual samples of TPM and dust fall. Data would be monitored from the Met One E-Sampler in real time via a cellular modem. Data would be collected from the dust fall canister manually on a monthly basis. Air Quality Monitoring Station #1, or terminal monitoring station, will be located on the southwestern fence line of the facility within 10 m of the barge loader. Meteorological data will be monitored continuously and will be available in real time to the terminal operator and on the terminal's website to the general public. The monitoring will include air quality, temperature, relative humidity and rain. Data from the anemometer will be used to control the watering of the barges (i.e. 19 km/hr) and the shutdown of the barge loading operation (i.e. 40 km/hr). FSD's Environmental Coordinator will conduct visual opacity readings, a "visual determination of fugitive emissions from material processing sources" during every barge loading operation. They will advise the Director of Maintenance and Engineering of any issues and will make recommendations to remedy potential air quality issues. Levelton will conduct visual site inspections during each monthly air quality monitoring site visit.	*Quarterly Air Quality Report* as summarized above. FSD's Environmental Coordinator will prepare a monthly report to the Director of Engineering. The report will include: 1. Any issues noted 2. Recommendations to remedy potential air quality issues 3. Further mitigation measures aimed at preventing potential fugitive dust issues 4. Feedback on the results of past mitigation strategies implemented This report can be made available upon request.	Leachate

Item #	Activity Source	Type of Emission	Mitigation Strategy Description	Emission Monitored	Monitoring	Reporting	Non AQ Environmental Impacts
3	***Normal Operations – 8k DWT Barge Loading***						
	(a) Single tug arrives with single empty barge. Barge is positioned into place by tug and tied up at Berth 3 upstream of the Barge Loader in reach of the warping system. Awaits loading.	CACs	All tug traffic accessing FSD berths will be required to operate under the safe guidelines of the Navigable Waters Act. Tugs are also required to position the barges at the berths using experience and minimal amounts of propulsion as possible. FSD requests that the marine carrier also consider maximizing the use of tugs fitted with the newer technology of Z drives, which provide the same amount of torque at lower speeds and reduced emissions. All tug crews will be experienced operators.	NO_2 TPM Dust Fall	Although berthing speeds will not be verified, experienced FSD line crews will be able to identify excessive speeds if present. Issues would be noted by the Operations Foreman and reported to the Superintendent. Air Quality Monitoring Station #1 will take continual samples of TPM and dust fall. Data would be monitored from the Met One E-Sampler and meteorological monitoring station in real time via a cellular modem. Data would be collected from the dust fall canister manually on a monthly basis. Air Quality Monitoring Station #2 will take continual samples of TPM and dust fall. Data would be monitored from the Met One E-Sampler in real time via a cellular modem. Data would be collected from the dust fall canister manually on a monthly basis. Nitrogen dioxide would be tested using a hand held monitor on a monthly basis or more frequent as required. TPM and dust fall concentrations can be analyzed by wind speed and direction to infer potential sources.	General reporting of monitored over speeding, improperly operating tugs, or any other infractions will not be available to the public. Noncompliance in any of these cases will trigger a Notice of Safety and Environmental Standards Letter to be sent by FSD's Environmental Sustainability Committee to the Tug Operator. *Quarterly Air Quality Report* as summarized above.	Noise, Marine
	(b) Barges are warped downstream in response to barge loading operations	Fugitive Dust	Barges will be warped along the berths during loading operations via an electric motor and winching arrangement (warping system), which does not release any emissions. While the barges are at the berths, the coal surface on loaded barges will be wetted with river water as required (i.e. on days with no precipitation, sunny conditions, winds greater than 19 km/hr, rain birds operated from the berth could be used for five minutes every 30 minutes or as required). The coal on the barges is expected to absorb all of the water that will be sprayed on it during normal operations.	Dust Fall TPM	Air Quality Monitoring Station #1 will take continual samples of TPM and dust fall. Data would be monitored from the Met One E-Sampler and meteorological monitoring station in real time via a cellular modem. Data would be collected from the dust fall canister manually on a monthly basis. Air Quality Monitoring Station #2 will take continual samples of TPM and dust fall. Data would be monitored from the Met One E-Sampler in real time via a cellular modem. Data would be collected from the dust fall canister manually on a monthly basis.	*Quarterly Air Quality Report* as summarized above.	Noise, Marine
	(c) Single tug arrives and removes single loaded barge downriver of Barge Loader	CACs	All tug traffic accessing FSD berths will be required to operate under the safe guidelines of the Navigable Waters Act. Tugs are also required to position the barges at the berths using experience and minimal amounts of propulsion as possible. FSD requests that the marine carrier also consider maximizing the use of tugs fitted with the newer technology of Z drives, which provide the same amount of torque at lower speeds and reduced emissions. All tug crews will be experienced operators.	NO_2 TPM Dust Fall	Although berthing speeds will not be verified, experienced FSD line crews will be able to identify excessive speeds if present. Issues would be noted by the Operations Foreman and reported to the Superintendent. Air Quality Monitoring Station #1 will take continual samples of TPM and dust fall. Data would be monitored from the Met One E-Sampler and meteorological monitoring station in real time via a cellular modem. Data would be collected from the dust fall canister manually on a monthly basis. Air Quality Monitoring Station #2 will take continual samples of TPM and dust fall. Data would be monitored from the Met One E-Sampler in real time via a cellular modem. Data would be collected from the dust fall canister manually on a monthly basis. Nitrogen dioxide would be tested using a hand held monitor on a monthly basis or more frequent as required. TPM and dust fall concentrations can be analyzed by wind speed and direction to infer potential sources.	General reporting of monitored over speeding, improperly operating tugs, or any other infractions will not be available to the public. Noncompliance in any of these cases will trigger a Notice of Safety and Environmental Standards Letter to be sent by FSD's Environmental Sustainability Committee to the Tug Operator. *Quarterly Air Quality Report* as summarized above.	Noise, Marine

Item #	Activity Source	Type of Emission	Mitigation Strategy Description	Emission Monitored	Monitoring	Reporting	Non AQ Environmental Impacts
		Fugitive Dust	Two of the six re-circulated barges will be fitted with TPM monitors. Potential fugitive dust emissions from the loaded barges at berth side and during river transits will be monitored via these two Met One E-Sampler particulate monitors monitoring TPM. The monitors will be powered by a battery bank or gas generator and will collect data continuously while barges are travelling. Data will be downloaded at the end of every round trip. After the first year of operations, the monitoring strategy will be assessed and possibly modified depending on initial results. While the barges are at FSD, the coal surface on loaded barges will be wetted as required (i.e. on days with no precipitation, sunny conditions, winds greater than 19 km/hr, rain birds operated from the berth could be used for five minutes every 30 minutes or as required). The coal on the barges is expected to absorb all of the water that will be sprayed on it during normal operations. This will help control dust emissions during transit. Barge sidewalls will be used to partially protect coal from airflow and wind. The adjustable barge loader will be used to shape the coal pile on the barge such that it is slightly rounded and not peaked to reduce the ability of the coal to catch wind and create dust. The barge loader will be manually controlled and the operator will move the unit side to side, forward and back to flatten out the coal. Barge movements will only be conducted when wind conditions are appropriate. Coal barges will not operate in periods of high wind in excess of 40 km/hr (22 knots per hour) on a sustained basis of more than 5 minutes. The wind speed will be monitored on the tug by the Capitan as part of a BMP by the marine carrier.	TPM	Two of the six re-circulated barges will be fitted with TPM monitors. Potential fugitive dust emissions from the loaded barges at berth side and during river transits will be monitored via these two Met One E-Sampler particulate monitors monitoring TPM. The monitors will be powered by a battery bank or gas generator and will collect data continuously while barges are travelling. Data will be downloaded at the end of every round trip. After the first year of operations, the monitoring strategy will be assessed and possibly modified depending on initial results.	*Quarterly Air Quality Report* as summarized above.	Noise, Marine

Item #	Activity Source	Type of Emission	Mitigation Strategy Description	Emission Monitored	Monitoring	Reporting	Non AQ Environmental Impacts
	(d) Single tug and loaded barge travel Texada Island	CACs	FSD requests that the marine carrier also consider maximizing the use of tugs fitted with the newer technology of Z drives, which provide the same amount of torque at lower speeds and reduced emissions. All tug crews will be experienced operators.	None	None	None	Noise, Marine
		Fugitive Dust	Two of the six re-circulated barges will be fitted with TPM monitors. Potential fugitive dust emissions from the loaded barges at berth side and during river transits will be monitored via these two Met One E-Sampler particulate monitors monitoring TPM. The monitors will be powered by a battery bank or gas generator and will collect data continuously while barges are travelling. Data will be downloaded at the end of every round trip. After the first year of operations, the monitoring strategy will be assessed and possibly modified depending on initial results. While the barges are at FSD, the coal surface on loaded barges will be wetted as required (i.e. rain birds operated from the berth for five minutes every 30 minutes or as required). The coal on the barges is expected to absorb all of the water that will be sprayed on it during normal operations. Barge sidewalls will be used to partially protect coal from airflow and wind. The adjustable barge loader will be used to shape the coal pile on the barge such that it is slightly rounded and not peaked to reduce the ability of the coal to catch wind and create dust. The barge loader will be manually controlled and the operator will move the unit side to side, forward and back to flatten out the coal. Coal barge will be sprayed with water prior to departure from FSD if the surface of the coal is not sufficiently wet to help control dusting during transit. Coal barges will not operate in periods of high wind in excess of 40 km/hr (22 knots per hour) on a sustained basis of more than 5 minutes. The wind speed will be monitored on the tug by the Capitan as part of a BMP by the marine carrier.	TPM	Two of the six re-circulated barges will be fitted with TPM monitors. Potential fugitive dust emissions from the loaded barges at berth side and during river transits will be monitored via these two Met One E-Sampler particulate monitors monitoring TPM. The monitors will be powered by a battery bank or gas generator and will collect data continuously while barges are travelling. Data will be downloaded at the end of every round trip. After the first year of operations, the monitoring strategy will be assessed and possibly modified depending on initial results.	*Quarterly Air Quality Report* as summarized above.	Noise, Marine
4	***Emergency Operations – Regular 8k DWT Coal barges unavailable for loading or transit – Stockpile Avoidance***						
	(a) Option 1 - Delay of rail unloading	CACs Fugitive Dust	In the event that an 8k DWT barge is unavailable for loading or that weather conditions disallow barges transiting the river, a loaded coal train will remain unloaded and staged in the PARY for a maximum of 48 hours. Mitigation strategies same as listed under 1a.	Dust Fall TPM NO_2	Monitoring strategies same as listed under Section 1a.	Reporting strategies same as listed under Section 1a.	Noise, Spills

Item #	Activity Source	Type of Emission	Mitigation Strategy Description	Emission Monitored	Monitoring	Reporting	Non AQ Environmental Impacts
	(b) Option 2 - Alternate barges loaded	CACs Fugitive Dust	In the event that an 8k DWT barge is unavailable for loading or that weather conditions disallow barges transiting the river, alternate barges will be loaded. These barges will most likely be smaller, (i.e. 6k DWT or less). Alternate barges can be utilized for storage of coal for a maximum of two coal trains. Depending on annual coal throughput, this could postpone the transit of coal for up to four days. Loading of alternate coal barges will maintain the same mitigation strategies as listed under 2c and 3.	Dust Fall TPM NO_2	Loading of alternate coal barges will maintain the same monitoring strategies as listed under Section 2c and 3.	Loading of alternate coal barges will maintain the same reporting strategies as listed under Section 2c and 3.	Leachate, Noise, Marine
	(c) Option 3 - Delay of Rail Carrier unit train on US siding	N/A	In the event that an 8k DWT barge is unavailable for loading or that weather conditions disallow barges transiting the river, FSD has the option of requesting the rail carrier to hold a loaded coal train on the nearest siding (in the US) for a maximum of 24 hours. Mitigation strategies same as listed under 1a.	N/A	N/A	N/A.	N/A
5	***Emergency Operations – Regular 8k DWT Coal barges unavailable for loading or transit – Rail to Emergency Stockpile***						
	(a) Coal received by rail up to barge loader	CACs Fugitive Dust	In the event that all of the mitigation strategies outlined in Section 4 have been exhausted, a stockpile can be created on the dock utilizing the same Barge Loader. Mitigation strategies same as listed under Section 2. Once normal operations resume, the stockpile will be the first product to be reloaded on the barge. Based on the mitigation strategies listed in Section 4, it is anticipated that the requirement for a stockpile will be no more than three times a year and no longer than 48 hours at each time.	Dust Fall TPM NO_2	Monitoring strategies same as listed under Section 2.	Reporting strategies same as listed under Section 2.	Grey Water Management, Leachate

Item #	Activity Source	Type of Emission	Mitigation Strategy Description	Emission Monitored	Monitoring	Reporting	Non AQ Environmental Impacts
	(b) Barge loader slewed over to create Emergency Stockpile	Fugitive Dust	Coal drop heights will be limited through the use of a variable height (lufting) loader to reduce the ability for the product to catch wind and create dust. The loader will be covered to contain the product and reduce emissions. A short directional snorkel off the end of barge loader will be used to reduce turbulence of the product and drop height which eliminates the ability for the product to separate or catch wind and create dust. The snorkel will be enclosed to contain the product and reduce emissions. The adjustable barge loader will be used to shape the stockpile such that it is slightly rounded and not peaked to reduce the ability of the coal to catch wind and create dust. The barge loader will be manually controlled and the operator will move the unit side to side, forward and back to flatten out the coal. In response to dust generation, and when weather conditions are expected to lead to dust generation (days with no precipitation, sunny conditions, winds greater than 19 km/hr), water will be applied to wet the coal as it is stockpiled. The trigger value for spraying the stockpile has been adapted from other bulk terminals, and will be evaluated on a continual basis. Application will be via a manually operated spray halo installed on the tip of the barge loader and a series of manually operated rain birds along the berth face. Operations will shut down the stockpile operation in periods of winds in excess of 40 km/hr on a sustained basis of more than 5 minutes. This operational cut-off value has been adapted from other bulk terminals, and will be evaluated on a continual basis. FSD's Environmental Coordinator will conduct visual opacity readings, a "visual determination of fugitive emissions from material processing sources" during every stockpile operation. The Environmental Coordinator can authorize the shutdown of the stockpile operation, or any other operation, should visual observations of emissions indicate an opacity of > 20%. Pile profiled with limited height, surrounded by a short concrete wall to prevent the coal pile from moving or sloughing. The height of the pile will be a maximum of 3 m to prevent any peaking and avoid dust generation. The concrete wall/berm can be constructed up to a height of 2.3 m, or more than 2/3 of the height of the pile.	Dust Fall TPM	Air Quality Monitoring Station #1 will take continual samples of TPM and dust fall. Data would be monitored from the Met One E-Sampler and meteorological monitoring station in real time via a cellular modem. Data would be collected from the dust fall canister manually on a monthly basis. Air Quality Monitoring Station #2 will take continual samples of TPM and dust fall. Data would be monitored from the Met One E-Sampler in real time via a cellular modem. Data would be collected from the dust fall canister manually on a monthly basis. Air Quality Monitoring Station #1, or terminal monitoring station, will be located on the southwestern fence line of the facility within 10 m of the barge loader. Meteorological data will be monitored continuously and will be available in real time to the terminal operator and on the terminal's website to the general public. The monitoring will include air quality, temperature, relative humidity and rain. Data from the anemometer will be used to control the watering of the barges (i.e. 19 km/hr) and the shutdown of the barge loading operation (i.e. 40 km/hr). FSD's Environmental Coordinator will conduct visual opacity readings, a "visual determination of fugitive emissions from material processing sources" during every barge loading operation. They will advise the Director of Maintenance and Engineering of any issues and will make recommendations to remedy potential air quality issues. Levelton will conduct visual site inspections during each monthly air quality monitoring site visit.	Reporting strategies same as listed under Section 2.	Grey Water Management, Leachate

Item #	Activity Source	Type of Emission	Mitigation Strategy Description	Emission Monitored	Monitoring	Reporting	Non AQ Environmental Impacts
6	***Emergency Operations – Management of Emergency Stockpile***						
	(a) Management of Emergency Stockpile	CACs	Once normal operations resume, the stockpile will be the first product to be reloaded on the barge. Based on the mitigation strategies listed in Section 4, it is anticipated that the requirement for a stockpile will be no more than three times year no longer than 48 hours at each time. Compaction by a tracked machine (i.e. bull dozer) to reduce oxygen and dust. Any machines used for compaction will be no less than Tier 2 engine. Operating time of the machine will be limited to when required only, not on a consistent basis during the entire time the stock pile is present.	Dust Fall TPM NO_2	Nitrogen dioxide would be tested using a hand held monitor on a monthly basis or more frequent as required. TPM and dust fall concentrations can be analyzed by wind speed and direction to infer potential sources.	*Quarterly Air Quality Report* as summarized above. FSD's Environmental Coordinator will prepare a monthly report to the Director of Engineering. The report will include: 1. Any issues noted 2. Recommendations to remedy potential air quality issues 3. Further mitigation measures aimed at preventing potential fugitive dust issues 4. Feedback on the results of past mitigation strategies implemented This report can be made available upon request.	Grey Water Management, Leachate
		Fugitive Dust	Once normal operations resume, the stockpile will be the first product to be reloaded on the barge. Based on the mitigation strategies listed in Section 4, it is anticipated that the requirement for a stockpile will be no more than three times a year and no longer than 48 hours at each time. Pile profiled with limited height, surrounded by a short concrete wall to prevent the coal pile from moving or sloughing. The height of the pile will be a maximum of 3 m to prevent any peaking and avoid dust generation. The concrete wall/berm can be constructed up to a height of 2.3 m, or more than 2/3 of the height of the pile. FSD's Environmental Coordinator will conduct visual opacity readings, a "visual determination of fugitive emissions from material processing sources" during every stockpile operation. The Environmental Coordinator can authorize the shutdown of the stockpile operation, or any other operation, should visual observations of emissions indicate an opacity of > 20%. In response to dust generation, and when weather conditions are expected to lead to dust generation (days with no precipitation, sunny conditions, winds greater than 19 km/hr), water will be applied to wet the coal as it is stockpiled. The trigger value for spraying the stockpile has been adapted from other bulk terminals, and will be evaluated on a continual basis. Compaction by a tracked machine (i.e. bull dozer) to reduce oxygen and dust. Infrared camera will be used by the Environmental Coordinator on a daily basis to check for "hot spots" on the topography of the coal stockpile. Any areas of concern will be brought to Maintenance's attention. The area will be immediately exhumed and watered down to eliminate spontaneous combustions and the creation of smoke.	Dust Fall TPM	Air Quality Monitoring Station #1 will take continual samples of TPM and dust fall. Data would be monitored from the Met One E-Sampler and meteorological monitoring station in real time via a cellular modem. Data would be collected from the dust fall canister manually on a monthly basis. Air Quality Monitoring Station #2 will take continual samples of TPM and dust fall. Data would be monitored from the Met One E-Sampler in real time via a cellular modem. Data would be collected from the dust fall canister manually on a monthly basis. Air Quality Monitoring Station #1, or terminal monitoring station, will be located on the southwestern fence line of the facility within 10 m of the barge loader. Meteorological data will be monitored continuously and will be available in real time to the terminal operator and on the terminal's website to the general public. The monitoring will include air quality, temperature, relative humidity and rain. Data from the anemometer will be used to control the watering of the barges (i.e. 19 km/hr). FSD's Environmental Coordinator will conduct visual opacity readings, a "visual determination of fugitive emissions from material processing sources" during every barge loading operation. They will advise the Director of Maintenance and Engineering of any issues and will make recommendations to remedy potential air quality issues. FSD's Environmental Coordinator will conduct daily "hot spot" checks utilizing an infrared camera. FSD will request for Levelton to conduct one visual site inspection during an Emergency Stockpile event.	*Quarterly Air Quality Report* as summarized above. FSD's Environmental Coordinator will prepare a monthly report to the Director of Engineering. The report will include: 1. Any issues noted 2. Recommendations to remedy potential air quality issues 3. Further mitigation measures aimed at preventing potential fugitive dust issues 4. Feedback on the results of past mitigation strategies implemented This report can be made available upon request.	Grey Water Management, Leachate

Item #	Activity Source	Type of Emission	Mitigation Strategy Description	Emission Monitored	Monitoring	Reporting	Non AQ Environmental Impacts
7	***Emergency Operations – Reclaim of Emergency Stockpile***						
	(a) Reclaim of Emergency Stockpile to Reclaim Hopper on reclaim jumper conveyor.	CACs	Once normal operations resume, the stockpile will be the first product to be reloaded on the barge. Based on the mitigation strategies listed in Section 4, it is anticipated that the requirement for a stockpile will be no more than three times a year and no longer than 48 hours at each time. Reclaim of the coal will be via a rubber tired machine (i.e. front end loader) fitted with a bucket. Any machines used for reclaim will be no less than a Tier 2 engine. Operating time of the machine will be limited to when required only, not on a consistent basis during the entire time the stock pile is reclaimed. FSD has implemented an anti-idling policy within the Terminal. The polity requires the machine operators to shut down the machine when it is known that the machine is not required for a period of 15 minutes in duration or longer.	Dust Fall TPM NO_2	Nitrogen dioxide would be tested using a hand held monitor on a monthly basis or more frequent as required. TPM and dust fall concentrations can be analyzed by wind speed and direction to infer potential sources. Anti-idling will be monitored by the Operational Foreman, Superintendents and Environmental Coordinator.	*Quarterly Air Quality Report* as summarized above. FSD's Environmental Coordinator will prepare a monthly report to the Director of Engineering. The report will include: 1. Any issues noted 2. Recommendations to remedy potential air quality issues 3. Further mitigation measures aimed at preventing potential fugitive dust issues 4. Feedback on the results of past mitigation strategies implemented This report can be made available upon request.	Noise, Spills, Grey Water Management, Leachate
		Fugitive Dust	Once normal operations resume, the stockpile will be the first product to be reloaded on the barge. Based on the mitigation strategies listed in Section 4, it is anticipated that the requirement for a stockpile will be no more than three times a year and no longer than 48 hours at each time. FSD's Environmental Coordinator will conduct visual opacity readings, a "visual determination of fugitive emissions from material processing sources" during every stockpile operation. The Environmental Coordinator can authorize the shutdown of the stockpile operation, or any other operation, should visual observations of emissions indicate an opacity of > 20%. In response to dust generation, and when weather conditions are expected to lead to dust generation (days with no precipitation, sunny conditions, winds greater than 19 km/hr), water will be applied to wet the coal as it is stockpiled. The trigger value for spraying the stockpile has been adapted from other bulk terminals, and will be evaluated on a continual basis. To reduce air flow, wind walls on three sides of the reclaim hopper fed by the FEL. The height of the wind walls will be up to 1 m which reduces the ability for the product to catch wind and create dust. Short drop heights (to a maximum of 1 m) from front end loader buckets to hopper to reduce turbulence which eliminates the ability for the product to separate or catch wind and create dust.	Dust Fall TPM	Air Quality Monitoring Station #1 will take continual samples of TPM and dust fall. Data would be monitored from the Met One E-Sampler and meteorological monitoring station in real time via a cellular modem. Data would be collected from the dust fall canister manually on a monthly basis. Air Quality Monitoring Station #2 will take continual samples of TPM and dust fall. Data would be monitored from the Met One E-Sampler in real time via a cellular modem. Data would be collected from the dust fall canister manually on a monthly basis. Air Quality Monitoring Station #1, or terminal monitoring station, will be located on the southwestern fence line of the facility within 10 m of the barge loader. Meteorological data will be monitored continuously and will be available in real time to the terminal operator and on the terminal's website to the general public. The monitoring will include air quality, temperature, relative humidity and rain. Data from the anemometer will be used to control the watering of the barges (i.e. 19 km/hr). FSD's Environmental Coordinator will conduct visual opacity readings, a "visual determination of fugitive emissions from material processing sources" during every barge loading operation. They will advise the Director of Maintenance and Engineering of any issues and will make recommendations to remedy potential air quality issues. FSD will request for Levelton to conduct one visual site inspection during an Emergency Stockpile event.	*Quarterly Air Quality Report* as summarized above. FSD's Environmental Coordinator will prepare a monthly report to the Director of Engineering. The report will include: 1. Any issues noted 2. Recommendations to remedy potential air quality issues 3. Further mitigation measures aimed at preventing potential fugitive dust issues 4. Feedback on the results of past mitigation strategies implemented This report can be made available upon request.	Grey Water Management, Leachate

Item #	Activity Source	Type of Emission	Mitigation Strategy Description	Emission Monitored	Monitoring	Reporting	Non AQ Environmental Impacts
	(b) Reclaim of Emergency Stockpile to Reclaim Hopper on Barge Loader from reclaim jumper conveyor.	Fugitive Dust	FSD's Environmental Coordinator will conduct visual opacity readings, a "visual determination of fugitive emissions from material processing sources" during every stockpile operation. The Environmental Coordinator can authorize the shutdown of the stockpile operation, or any other operation, should visual observations of emissions indicate an opacity of > 20%. Wind walls on three sides of the Barge Loader reclaim hopper to reduce air flow. The height of the wind walls will be up to 1 m which reduces the ability for the product to catch wind and create dust. Hopper will also be sprayed with water mist for the duration of the reclaim operation. Short drop heights (to a maximum of 1 m) from reclaim jumper conveyor to Barge Loader hopper to reduce turbulence which eliminates the ability for the product to separate or catch wind and create dust.	Dust Fall TPM	Air Quality Monitoring Station #1 will take continual samples of TPM and dust fall. Data would be monitored from the Met One E-Sampler and meteorological monitoring station in real time via a cellular modem. Data would be collected from the dust fall canister manually on a monthly basis. Air Quality Monitoring Station #2 will take continual samples of TPM and dust fall. Data would be monitored from the Met One E-Sampler in real time via a cellular modem. Data would be collected from the dust fall canister manually on a monthly basis. Air Quality Monitoring Station #1, or terminal monitoring station, will be located on the southwestern fence line of the facility within 10 m of the barge loader. Meteorological data will be monitored continuously and will be available in real time to the terminal operator and on the terminal's website to the general public. The monitoring will include air quality, temperature, relative humidity and rain. Data from the anemometer will be used to control the watering of the barges (i.e. 19 km/hr). FSD's Environmental Coordinator will conduct visual opacity readings, a "visual determination of fugitive emissions from material processing sources" during every barge loading operation. They will advise the Director of Maintenance and Engineering of any issues and will make recommendations to remedy potential air quality issues. FSD will request for Levelton to conduct one visual site inspection during an Emergency Stockpile event.	*Quarterly Air Quality Report* as summarized above. FSD's Environmental Coordinator will prepare a monthly report to the Director of Engineering. The report will include: 1. Any issues noted 2. Recommendations to remedy potential air quality issues 3. Further mitigation measures aimed at preventing potential fugitive dust issues 4. Feedback on the results of past mitigation strategies implemented This report can be made available upon request.	
	(c) Barge loading from Emergency Stockpile reclaim Operation.	CACs	Loading of coal barges during an Emergency Stockpile reclaim operation will maintain the same mitigation strategies as listed under 2c and 3.	Dust Fall TPM NO_2	Loading of coal barges during an Emergency Stockpile reclaim operation will maintain the same monitoring strategies as listed under Section 2c and 3.	Loading of coal barges during an Emergency Stockpile reclaim operation will maintain the same reporting strategies as listed under Section 2c and 3.	Leachate, Noise, Marine

* Fugitive Dust from coal: Particulate Matter (PM) (Total Particulate Matter (TPM), PM_{10} and $PM_{2.5}$)
** Criteria Air Contaminants (CACs) from combustion sources: SO_x, NO_x, PM, VOCs, CO, NH_3)

6.3 COMBUSTION EMISSIONS

As discussed above, operational combustion emission sources directly controlled by FSD include front end loaders, yard-switch engines and locomotives within the rail yard. Combustion emissions during operations will be minimized and mitigated by implementing similar BMPs to those during construction that include, but are not limited to, the following:

- Implement an anti-idling protocol (see Appendix A) for equipment and vehicles that requires equipment and vehicles to be turned off, if practical and when not in use, unless continuous idling is required by the equipment operation specifications. Make use of legislated best available technologies and practices to reduce emissions;
- Operate equipment at and within load tolerances and ratings;
- Ensure that all motorized equipment is in good working order and maintained to manufacturer's specifications;
- Comply with applicable regulation regarding heavy-duty diesel non-road equipment and other construction equipment (including Metro Vancouver's Non-Road Diesel Emission Regulation); and,
- Use grid power rather than locally generated power whenever practical to reduce emissions.
- All mainline rail engines delivering coal to the FSD will be equipped with anti-idling technology. FSD will perform operational checks to ensure anti-idling is occurring in accordance with FSD's standard operating procedures (see Appendix A). This will be conducted through visual checks with rail operators and records will be included as part of the quarterly air quality reports discussed in Section 7.4.

7. AIR QUALITY ASSESSMENT, MONITORING AND REPORTING

Levelton will manage and maintain the air quality assessment and monitoring program, including all of the monitoring equipment, on behalf of FSD. Analytical testing services will be provided by CARO Analytical Services who provide a full service environmental laboratory and are a Canadian Association for Laboratory Accreditation (CALA) laboratory.

The section above outlined a number of BMPs to be implemented at the Facility to control potential fugitive dust and combustion emissions. This section outlines procedures to be implemented to:

- Assess the effectiveness of the mitigation measures in place at the Facility and during transport of coal by barge to Texada Island, and take corrective actions to mitigate air quality concerns caused by FSD's operations; and,
- Confirm the results of the air quality assessment prepared for the Environmental Impact Assessment of the Facility which predicted low air quality impacts localized around the facility and from the transport of coal by barge to Texada Island.

Continuous air quality and meteorological monitoring will be undertaken by Levelton and Levelton will conduct air quality site visits on a monthly basis to conduct visual site inspections and to perform necessary maintenance, calibration and operational activities for the monitoring program. Reporting will be conducted on a quarterly basis, and a public website will be created to share the monitoring and reporting data.

FSD has contracted Levelton to conduct analysis and assessment to provide corrective action strategies. Levelton will also be responsible for assessing corrective action and mitigation strategies to ensure they are effective. In conjunction with FSD's Environmental Coordinator, Levelton will jointly review the results and agree on the status of mitigation measures. FSD's Environmental Coordinator will produce a quarterly performance report which will compare actual results to key performance targets. Key performance targets will be set for ambient air quality (total particulate matter) and dust fall recorded at the FSD monitoring locations, visual observations of emissions with an opacity >20%, and complaints received. A copy of the "scorecard" will be given to PMV and reviewed on a quarterly basis.

The Environmental Coordinator will report to the Director of Maintenance and Engineering who is responsible for environmental sustainability. Sustainability targets will be set on an annual basis and will be a key performance indicator corporately. FSD's Environmental Coordinator will produce a quarterly performance report which will compare actual results to key performance targets. Key performance targets will be set for ambient air quality (total particulate matter) and dust fall recorded at the FSD monitoring locations, visual observations of emissions with an opacity >20%, and complaints received. A copy of the "scorecard" will be given to FSD's Executive along with corrective action on a quarterly basis.

A copy of FSD's Environmental Policy can be found in Appendix C.

7.1 VISUAL SITE INSPECTION

A visual inspection procedure will implemented to identify areas of potential compliance / non-compliance with dust mitigation goals and BMPs. Appendix D contains an example Visual Site Inspection Form which is to be completed during site inspections. Potential fugitive dust sources (eg. stockpiles, material transfer points, road dust, etc.) would be visually identified. It would be recommended that a visual site inspection be completed by the Environmental Coordinator (to be hired by FSD once construction commences) daily while the site construction is active and conditions are dry. During operations visual site inspections will occur during each barge load and during each monthly air quality monitoring site visit conducted by Levelton.

It is recommended that visual observations of emissions with an opacity >20% characterize an air quality issue not in line with the air quality goals for the Facility. The Environmental Coordinator will be responsible for carrying out visual opacity readings. Training to perform visual opacity measurements would require the Environmental Coordinator to take a Visible Emissions Training Course (VETC) according to EPA Method 9: "The Evaluation of Visible Emissions" and EPA Method 22: "Visible Determination of Fugitive Emissions from Material Processing Sources". Training records will be included in the first quarterly report and subsequent reports (See Section 7.4) if re-certifications or new certifications have been completed.

For identified air quality issues:

- The on-site inspector and/or Environmental Coordinator will advise the Director of Maintenance and Engineering of any issues and will make recommendations to remedy potential air quality issues;
- The on-site inspector and/or Environmental Coordinator will advise the Director of Maintenance and Engineering on further mitigation measures aimed at preventing potential fugitive dust issues; and,
- The Director of Maintenance and Engineering will respond to these recommendations and mitigation measures which the on-site inspector and/or Environmental Coordinator will include in interim reports.

In the event of observed air quality events/issues, recommendations for mitigation will be made based on those provided in this AQMP. The Director of Maintenance and Engineering will be responsible for implementing mitigation measures recommended by the on-site inspector and/or Environmental Coordinator to reduce opacity readings below 20%. The Environmental Coordinator would determine that the mitigation measures were effective in reducing the opacity by performing visual opacity measurements following the implementation of the measures.

7.2 AIR QUALITY MONITORING

Ambient air concentrations of pollutants can be influenced by meteorology, precipitation, and other sources, in addition to construction and operation activities. Since variations in all of these factors is expected when monitoring ambient air quality, the monitoring data may not necessarily reflect the contribution of Facility activities to the ambient air quality; thus the ambient monitoring data does not constitute a definitive quantitative measure to track air quality impacts from the Facility. Nonetheless, the concentrations can act as a guide, and if ambient concentrations exceed the air quality objectives, or baseline levels, then:

- The origin / source of the emissions will be investigated and documented; and,
- If it is determined that the emissions are a result of FSD's operations, then;
    - The causes and potential reasons will be investigated; and,
    - Appropriate corrective action(s) will be taken to mitigate air quality impacts.

Permanent Monitoring Locations

Two permanent monitoring locations have been identified where monitoring equipment will be installed and operated for the duration of the Project. Air Quality Monitoring Station #1 will be located on the southwestern fenceline of the facility as shown in Figure 7-1 within 10 metres of the barge loader. This location was chosen as it's located on the fenceline downwind of the predominant winds, and is directly exposed to potential emissions from the facility. Air Quality Monitoring Station #2 will be located to the east of the facility which is considered to be the most appropriate monitoring location to represent maximum exposure to the community based on the air quality assessment (Levelton, 2012). This location, shown in Figure 7-1, is referred to as the "nearest resident" location. Both of these stations would be equipped with a Met One E-Sampler particulate monitor (monitoring TSP) and dust fall canister.

Near or collocated with Air Quality Monitoring Station #1 will be a meteorological station which will include an anemometer, rain gauge and temperature / relative humidity sensor. The station will be powered using main power.

Overview of Air Quality Monitoring Station #1:

Location:	On FSD's property located on the fenceline within 10 metres of the barge loader.
Security:	Fencing and locks.
Power:	Main power with a battery backup.
Mounting:	Instrumentation will be mounted onto a 10 metre lattice tower (see Appendix E for tower details) with exception being the precipitation gauge and dust fall canisters, which will be mounted separately on pole mounts nearby the tower.
Communications:	Communications with the station will be via a direct connect and cellular

	modem. Appendix E provides modem details.
Instruments:	Total Suspended Particulate (TSP) matter (Met One E-Sampler), wind speed and direction (RM Young 05305 Wind Monitor-AQ), rain gauge (Campbell Scientific TE525M), and temperature and relative humidity (Rotronic Instrument Corporation HC2-S3-L). Canister for dust fall. See Appendix E for details.
Datalogger:	Datalogger (Campbell Scientific CR1000) and weather proof enclosure (Campbell Scientific). See Appendix E for details.

Meteorological and particulate matter data will be monitored continuously and will be available in real time to govern operations at the Facility.

As Air Quality Monitoring Station #2 is located off FSD's property, FSD's Environmental Coordinator will coordinate a land lease agreement with the appropriate land owner. The Environmental Coordinator will also ensure main power is provided to the monitoring station either directly from BC Hydro or through an arrangement with a neighbouring property to the monitoring station. The station will be secured using fencing and locks by Levelton and access will be on foot from River Road.

Overview of Air Quality Monitoring Station #2:

Location:	See Figure 7-1 "nearest residential receptor". FSD has started an inquiry with the BC Ministry of Transportation and Infrastructure to determine if this location is their jurisdiction and the process that needs to take place to install a permanent air quality and dust fall monitoring station.
Security:	Fencing and locks.
Power:	Main power with a battery backup.
Mounting:	E-Sampler and dust fall will be mounted on separate a pole mounts.
Communications:	Communications with the station will be via a direct connect and cellular modem. Appendix E provides modem details.
Instruments:	Total Suspended Particulate (TSP) matter (Met One E-Sampler). Canister for dust fall. See Appendix E for details.
Datalogger:	Not required. Direct connection to the E-Sampler is made via the modem.

Establishing a Pre-Project Baseline

Prior to the start of construction on the Project, a baseline particulate matter, dust fall and nitrogen dioxide (NO_2) monitoring program will be implemented to characterize pre-project particulate matter, dust fall and NO_2 concentrations. The monitoring will continue through the construction period and operations. The objective of the monitoring program is to:

- Characterize the typical range of particulate matter concentrations and dust fall experienced at the facility fenceline and in the neighbourhood to the east of FSD;
- Conduct a chemical analysis of the coal to assist in determining the percentage of the particulate matter / dust fall containing coal once the Project has commenced;

- Characterize the typical range of nitrogen dioxide (NO_2) concentrations experienced at and near facility fenceline; and,

- Provide a comparative reference for future monitoring required by FSD.

Two monitoring stations with E-Samplers (monitoring TSP) and dust fall canisters, as highlighted in the previous section, would be installed at least six months period prior to project construction. Ideally, this period would capture particulate matter concentrations during approximately 3 months of the "dry" season (April – September) and 3 months of the "wet" season (October – March).

Monthly site visits would be conducted to collect the dust fall canisters for analysis and to perform calibrations and maintenance of the monitoring equipment. During this time a visual site inspection will also be conducted which will include monitoring of NO_2 concentrations using a handheld monitor. Sampling will be conducted at locations along and near the facility's eastern fenceline by the rail yard to determine background concentrations in this area - locations based on the results from the Project's air quality assessment.

In addition to installing the particulate matter / dust fall monitoring stations, a meteorological monitoring station would also be installed at this time to begin measuring wind speed, wind direction, rainfall, temperature and relative humidity. The anemometer would be installed at a height and in a location to be free of the influence of structures and buildings surrounding. By deploying the anemometer, particulate matter concentrations measured by the continuous monitors can be analyzed by wind direction and wind speed to infer potential existing sources of particulate matter in the area. Figure 7-1 indicates the locations where the monitor stations will be located.

Baseline air quality monitoring data will be summarized and assessed prior to operations.

Operational Air Quality Monitoring

As discussed previously, the air quality impacts from the coal transfer facility at FSD are predicted to be low. Therefore, the AQMP for the Project relies primarily on the implementation of the proposed mitigation measures and BMPs. Baseline air quality monitoring is recommended to allow for future comparison should air quality events or issues be identified despite the implementation of the proposed mitigation measures and BMPs.

The monitoring methodology and monitoring equipment used for the baseline monitoring will continue for the duration of the Project. The E-sampler (monitoring TSP), dust fall and NO_2 measurements will be used to assess the effectiveness of the BMPs implemented for the Facility by comparing to baseline levels. E-sampler (monitoring TSP) data will not be directly compared to air quality objectives for compliance purposes, but the concentrations can act as a guide, and if ambient concentrations exceed the air quality objectives, or baseline levels, then causes and potential reasons will be investigated to improve operations.

Air quality monitoring data can also be used:

- In combination with the wind data collected, to infer whether elevated particulate matter concentrations were potentially caused by FSD activities; and,

- To address community complaints or concerns regarding dust from FSD.

In addition to monitoring the facility emissions, an E-Sampler (monitoring TSP) will be used to sample potential coal dust emissions during the transport of the barges from FSD to Texada

Island to ensure the mitigation measures are working. Monitoring will also be conducted on the return trip from Texada Island to determine the delta between the loaded with coal trip and the not loaded with coal trip. If warranted, based on the data collected, additional mitigation measures will be considered, such as using a dust suppressant or if feasible covering the barge during transport.

The sections below provide more specific details regarding monitoring of meteorological data nitrogen dioxide, particulate matter and dust fall from the facility; and monitoring of particulate matter from the barge transport.

Facility Monitoring – Nitrogen Dioxide (NO_2)

The air quality assessment for the Project (Levelton, 2012) predicted some elevated NO_2 concentrations along or near the facility's eastern fenceline by the rail yard based on conservative assumptions of combustion emissions from rail operations at the facility. Short-term average data will be collected using a handheld NO_2 monitor during monthly air quality monitoring site visits at locations along or near the facility fenceline by the rail yard - locations based on the results from the Project's air quality assessment. Levelton will be conducting the monitoring and will coordinate the site visit so that measurements can be taken during times when the rail operations are active. The data will be compared to the modelling results; extrapolated and compared to ambient air quality objectives; and, operational data will be compared to background data collected.

Monitoring will be conducted with a VRAE (or similar) hand held monitor. Additional information on the VRAE can be found in Appendix E.

If the NO_2 monitoring results indicate potential health or air quality impacts from FSD's emissions, then mitigation measures will be recommended and implemented (where practical) and follow-up monitoring will be conducted to evaluate the effectiveness of the measures.

VRAE Hand Held Monitor

Facility Monitoring – Meteorological, Total Particulate Matter and Dust fall

An example meteorological, particulate matter and dust fall monitoring station which was used for the South Fraser Perimeter Road Project can be seen in the image on the right. The stations to be deployed for FSD's project contain the same key elements.

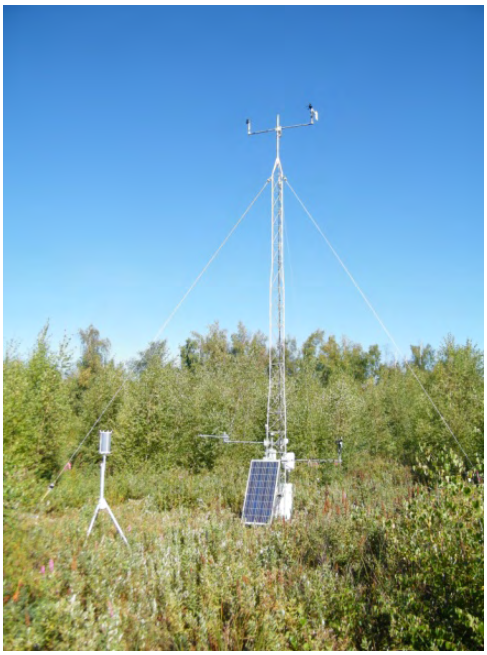

Meteorological, Particulate Matter and Dust fall Monitoring Station

Project: *South Fraser Perimeter Road*

Meteorological data will be monitored continuously and will be available in real time to govern operations at the Facility and will also be made available in real-time on the Project's website to the public, see Section 7.5.

The meteorological station for the project will include the following key elements:

- A standard height meteorological tower;
- A datalogger;
- Anemometer (Air quality specific model);
- Temperature / Relative Humidity sensor;
- Rain Gauge;
- A wireless modem; and
- Enclosure (for datalogger and modem)

Additional information regarding the meteorological equipment can be found in Appendix E.

Particulate matter monitoring will be conducted using Met One E-Samplers (monitoring TSP), shown in the image to the right. Data from the E-Samplers (monitoring TSP) at both fixed monitoring locations will monitor particulate matter continuously and results will be provided in real-time to FSD operators to govern operations and to the public via the project website.

Additional information regarding the E-Sampler (monitoring TSP) can be found in Appendix E.

If particulate monitoring data exceeds air quality objectives or baseline levels the origin or source of the emissions will be investigated and documented. If based on the investigation it's determined the elevated particulate matter concentrations were the result of FSD operations, then the cause and potential reasons will be determined and corrective action will be taken to mitigate the air quality impacts.

E-Sampler Particulate Matter Monitor

Dust fall monitoring will be conducted based on guidance provided in the *British Columbia Environmental Laboratory Manual: 2009* (see Appendix F, analysis will include: Particulate – Insoluble, Particulate – Ashed Insoluble, Particulate – Soluble and Particulate – Ashed Soluble). Based on the above analysis Particulate – Total can be calculated. Dust fall canisters are deployed for approximately 30 days each calendar month. The samples will be sent to CARO Analytical for analysis which will include a compositional analysis (total and fixed residue and coal content). If results are found to be above the monthly dust fall standard in BC, then the

cause will be investigate. If it's found that FSD's operations have caused the exceedance, corrective actions will be taken.

Additional dust fall monitoring will be considered within the adjacent community from FSD's facility based on complaints or requests from the community.

Barge Monitoring – Total Particulate Matter

Two barges will each be equipped with E-Sampler particulate monitors (see Appendix E for more information on the E-Sampler monitor) to monitor TSP for a period of no less than one year to monitor if watering the barges at berth before transit to Texada Island is sufficient to mitigate fugitive dust emissions. The monitors will be mounted to the back of the barges and will be powered using battery banks (multiple large capacity batteries) or gas generators depending on power requirements based on the length of return trips from FSD to Texada Island. The monitors will collect continuous data while the barges are travelling to Texada Island. The continuous data will be downloaded at the end of every round trip and will then be analyzed and included in the quarterly reporting and will be made publicly available on the Project air quality website as described in Section 7.5.

If the results indicate that water as a mitigation measure is not sufficient to mitigate against fugitive dust emissions, then additional mitigation measures will be implemented, such as applying a dust suppressant or if feasible covering the barge during transport.

Overview Map of Monitoring Locations

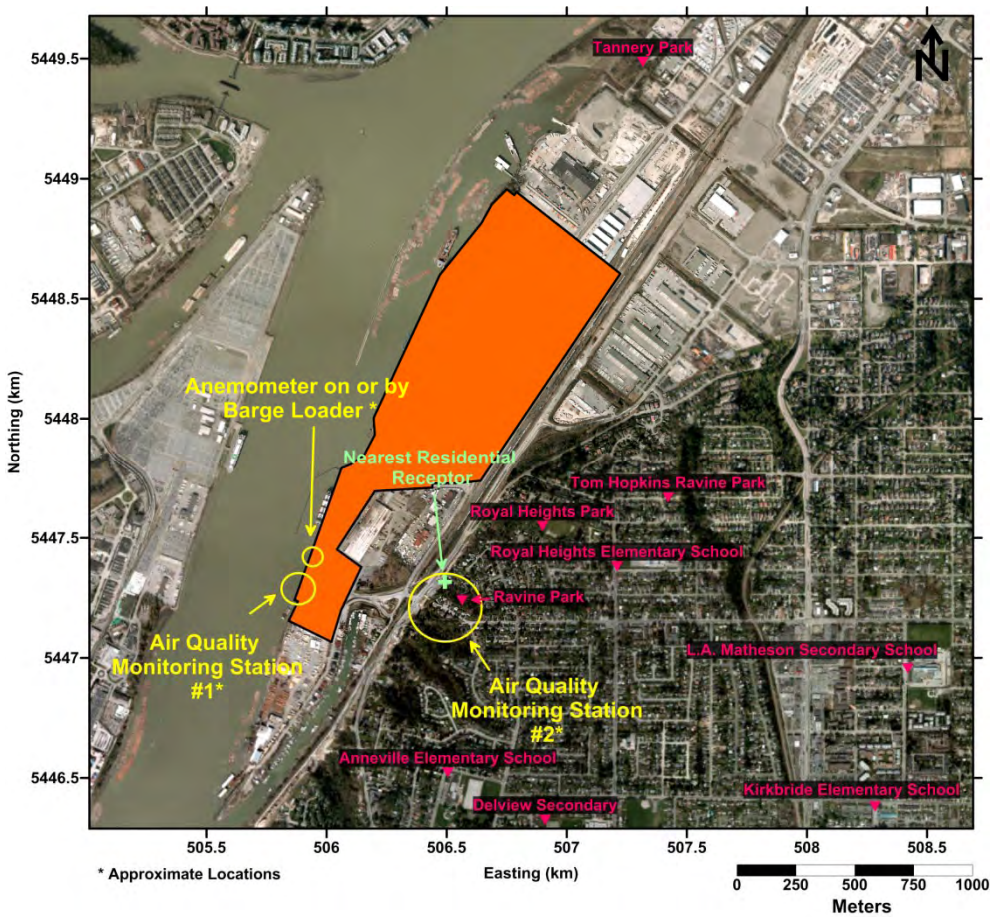

Zoomed View of Nearest Residential Receptor Monitoring Location

Figure 7-1 Air Quality Monitoring Locations

7.3 TRACKING / COMPLAINT MANAGEMENT SYSTEM

The AQMP will implement a BMP effectiveness monitoring tracking sheet, an example of which is shown in Appendix D. Tracking allows the Environmental Coordinator and Air Quality Specialists to monitor if the mitigation measures are appropriately mitigating the emission sources as intended. If BMPs and mitigation measures are observed to be ineffective, the Director of Maintenance and Engineering would be responsible for ensuring modifications or new mitigation measures are implemented.

In parallel with the BMP effectiveness monitoring tracking sheet, a dust complaint management system would be implemented under the AQMP. The logging system would include:

- **FSD personnel completing the form:**
  - Name, Title and Date;
- **Complaint Information:**
  - Resident location, name, phone number, email address, date / time complaint was received, and the reason for the complaint (visual / cosmetic or health related);
- **Source and timing of dust:**
  - Date and time of dust occurrence;
  - Specific nature of complaint / source of dust;
  - Onsite / rail traffic activities at the time of the complaint;
  - Wind conditions (anemometer data) at the time of the complaint;
  - General weather conditions during the time of the complaint;
  - Opacity reading when the complaint was received;
  - Particulate matter monitoring readings when the complaint was received;
- **Investigative actions:**
  - Investigations of dust source;
  - Anemometer / weather data / particulate matter data at the time of the investigation (as this may differ from when the complaint was received);
- **Resolution**
  - Actions taken (where feasible) to eliminate future occurrences;
  - Follow-up with resident;
  - Status post follow-up (resolved to resident satisfaction Y/N); and
  - Date file closed.

The logging system will help to gauge the effectiveness of the mitigation measures and BMPs implemented at the facility and will help in validating complaints and determining patterns of

complaints and corresponding activities on-site. An example of a *Dust Complaint Management Form* is included in Appendix G.

The metric for tracking air quality will be both qualitative and quantitative. For example, the visual site inspection reports and efficiency of feedback / actions taken will provide an indication of progress in a qualitative manner while the number of compliance and non-compliance items observed and complaints received, along with the air quality monitoring data will provide a quantitative measure.

7.4 QUARTERLY REPORTING

Reports written by Levelton summarizing the quarterly findings of the air quality monitoring program will be provided on a quarterly basis to PMV four to six weeks following the end of the quarter. The reports and any corrective action will be reviewed with PMV on a quarterly basis. FSD will also post the reports on their website.

An example quarterly report outline and content is as follows:

1. Overview

2. Meteorological, Air Quality and Dust Fall Monitoring Data

2.1 Meteorological Monitoring Data
This section will include average and maximum wind speed, wind roses, wind speed excursion above 19 km/h, total precipitation, maximum and minimum temperature for the previous quarter.

2.2 Air Quality Monitoring Data
Summary of TPM (1-hour maximum, 24-hour average results and annual average results (when sufficient data become available) and nitrogen dioxide monitoring results (short-term average results collected by the handheld monitor). Ongoing air quality monitoring data will be compared to the baseline data collected.

2.3 Dust Fall Monitoring Data
Monthly dust fall monitoring results reported based on compositional analysis (total and fixed residue and coal content) based on laboratory analysis.

3. Summary of Visual Site Inspections

3.1 FSD's Visual Site Inspections
Summary of visual site inspections for the previous quarter which would include details of identified issues, recommendations, follow-up and resolution.

3.2 Levelton Visual Site Inspections
Summary of visual site inspections for the previous quarter which would include details of identified issues, recommendations, follow-up and resolution.

4. Summary of Complaints
Summary from complaints logging system which would include details of any mitigation or follow-up actions required.

5. Corrective Action

6. Conclusion

7. Closure

8. References

Appendix A– Dust Fall Laboratory Analysis
Analytical laboratory results will be included in this appendix.

Appendix B– Visual Site Inspection Records
Visual site inspection records will be included in this appendix if an issue has been identified.

Appendix C– Water Application
Identification of volume of water applied for mitigation for each operation day.

Appendix D– Rail Anti-Idling Records
FSD will perform operational checks to ensure anti-idling is occurring in accordance with FSD's standard operating procedures (Appendix A). Records of the operational checks will be included in this appendix.

Appendix E– Visual Opacity Training Records
Visual opacity training records will be included in the first quarterly report and subsequent reports if re-certifications or new certifications have been complete.

7.5 PUBLIC WEBSITE FOR DATA ACCESS

In addition to quarterly reporting a publically available website linked from FSD's website (http://www.fsd.bc.ca/) will provide access to real-time data from the particulate matter / meteorological monitoring station at FSD and the particulate matter monitoring station representing the nearest residential receptor. The website will also include an archive of the quarterly air quality monitoring reports.

7.6 AIR QUALITY MANAGEMENT PLAN EFFECTIVENESS

The AQMP has been developed based on BMPs and Levelton's experience with similar projects. It is Levelton's professional opinion that the AQMP will be effective in mitigating fugitive dust emissions from operations (including barge loading and barge transit). However, the effectiveness of the program will be tracked and necessary corrective action will be taken to improve any and all aspects of the AQMP including mitigation measures, operating procedures, and air quality monitoring.

8. CONTACTS

Contacts concerning air quality issues at the Project site and implementation of the AQMP are as follows:

Environmental Coordinator (Fraser Surrey Docks)

TBD (an Environmental Co-ordinator will be hired once construction of the Project commences)

Director of Engineering and Maintenance (Fraser Surrey Docks)

Jurgen Franke 604-495-1184

Air Quality Specialists (Levelton Consultants Ltd.)

Chris Koscher / Tyler Abel 604-278-1411

9. REFERENCES

BC EMA, 2004. *British Columbia Environmental Management Act* (BC EMA). Government of British Columbia. Brought into force July 8th, 2004.

http://www.env.gov.bc.ca/epd/main/ema.htm

BC MOE, 2009. *Air Quality Objectives and Standards for British Columbia and Canada.* British Columbia Ministry of Environment. 2009.

http://www.bcairquality.ca/reports/pdfs/aqotable.pdf

BC Ministry of Energy and Mines, 2002. *Aggregate Operators Best Management Practices Handbook for British Columbia. Volume II – Best Management Practices*. April 2002. http://www.empr.gov.bc.ca/Mining/Aggregate/BMP/Pages/default.aspx

CCME, 2000. *Canada-Wide Standards for Particulate Matter (PM) and Ozone*. Canadian Council of Ministers of the Environment. June, 2000

http://www.ccme.ca/assets/pdf/pmozone_standard_e.pdf

CEPA, 2012. *Canadian Environmental Protection Act*. Government of Canada. CEPA 2012 brought into force July 6th, 2012.

http://www.ec.gc.ca/CEPARegistry/the_act/

Cheminfo 2005. *Best Practices for the Reduction of Air Emissions from Construction and Demolition Activities*. Report prepared for Environment Canada, Transboundary Issues Branch by Cheminfo Services Inc. March, 2005.

http://www.bieapfremp.org/Toolbox%20pdfs/EC%20-%20Final%20Code%20of%20Practice%20-%20Construction%20%20Demolition.pdf

Metro Vancouver, 2011. *Integrated Air Quality and Greenhouse Gas Management Plan*. Report prepared by Metro Vancouver). October, 2011.

http://www.metrovancouver.org/about/publications/Publications/IntegratedAirQualityGreenhouseGasManagementPlan-October2011.pdf

Metro Vancouver, 2008. *Air Quality Management Bylaws*.

http://www.metrovancouver.org/services/permits/Pages/airquality.aspx

Worksafe, 2013. *Occupational Health and Safety (OH&S) Regulation*. 2013.

http://www2.worksafebc.com/Publications/OHSRegulation/Home.asp

APPENDIX A – ANTI-IDLING POLICIES

Date: May 1 2013
Policy Number: 200-10

Anti-Idling Policy

Purpose:

To educate our employees on the environment & health benefits of an anti-idling policy. To limit diesel and gas exhaust particulate matter by limiting unnecessary idling of vehicles and equipment.

Facts:

Clean air is important to everyone. Today, in the Fraser Valley, air pollution causes health problems for residents, threatens the region's natural beauty and damages the agriculture and tourism industries. Solving the problem of air pollution and climate change is our collective responsibility. Every day, the choices we make as individuals are as important to improving air quality as are those made by governments and communities.

Transportation is responsible for nearly a third of Canada's total greenhouse gas emissions. Unless we reverse some of the following trends in vehicle use, transportation emissions will continue to rise.

Quick Facts

- Health Canada estimates that more than 5000 Canadians die prematurely each year because of air pollution, and thousands more become unnecessarily ill.
- An idling engine releases twice as many exhaust fumes than a vehicle in motion

Procedure:

- Turn off your engine if you're going to be stopped for more than 10 seconds
- Minimize warm-up idling
- Avoid high speeds and rapid acceleration

This effort will contribute to reducing air pollution and greenhouse gas emissions for the entire region. Emissions from idling vehicles are needless and can be easily prevented – all it takes is the turn of a key. When it comes to idling, one person can make a difference.

Locomotive Shut down procedures;

- Locomotives are to shut down on completion of shift and hand brake applied.
- When temperatures are expected to drop to - 3 degrees, the locomotive is not to be shut down.
- If during the working shift, if it is know that the locomotive is not required for a period 3 hours in duration or longer, the locomotive is to be shut down.

FRASER SURREY DOCKS LP
Pacific Rim Stevedoring

FSTB13 SAFETY RECORD FORM
RAIL SWITCHING OPERATIONS

Date & Shift:	**Rail Switching:**
Foreman Name & Man #:	**Switch Crew Names:**

General Safety Items	
Mandatory PPE: • Hi-Viz Vest is mandatory at all times. • Steel-toed CSA-approved safety boots at all times. • Gloves (should you require gloves, please ask)	☐
Common Injuries: • Legs, ankles; jumping from railcars; tripping on tracks and uneven ground	☐
Surroundings: • Be aware of other dock equipment working in same area. • Always protect the point. • Apply proper 3-point protection before going between equipment. • Ensure workmen are not on or near railcars before tying on or moving of same. • Never cross between moving equipment. • Never jump from equipment. • Never step or walk on the rail tracks. • Always ride the side of a car, not the front of it. • Always have the ability to stop movement within half your range of vision. • Never step on a coupler. • Air must be cut in on all railcars being handled at all times. • Crew to carry out intra-crew radio test prior to commencing duty. • Always be aware of who is giving movement instruction. • Receiver must repeat instruction given by sender. • Ensure proper use of engine bell and whistle. • Always expect movement of other trains, engines, cars or track movements. • Always keep a distance of 25ft when walking around standing equipment. • Open angle cocks slowly to avoid kick back from hose. • Apply sufficient hand brakes on railcars being spotted for loading and unloading. • Do not get on or off moving equipment. • Be familiar with areas of restricted clearance. • See separate Safe Work Procedures for the AGRI Facility.	☐
• Report all injuries immediately to your Foreman and First Aid. • Report all accidents and near misses immediately to your Foreman. • Cell phones and other personal electronic devices NOT to be used when working. • No idling of dock trucks and machinery when not is use	☐
Environmental Concerns and/or Other Items Addressed: • Entering rail carrier approached yard in a safe, managed and controlled manner • Exiting rail carrier departed yard in a safe, managed and controlled manner • Rail carrier locomotives were fitted with operational and effective Anti-Idling devices and exhibited anti-idling as per FSD SWP • Rail carrier locomotives were fitted with efficient AC VFD drives	☐
Safety Concerns and/or Other Items Addressed:	☐

Complete and return with payroll

APPENDIX B – OVERVIEW OF PROPOSED DUST SUPPRESSION AND WASTEWATER MANAGEMENT SYSTEMS

	TECHNICAL MEMORANDUM 2113-1 Rev 2	
	Project Title:	FRASER SURREY DOCKS PROPOSED COAL LOADOUT FACILITY
	Subject:	Overview Of Proposed Dust Suppression And Wastewater Management Systems
	Omni File: 2096	Date of Memorandum: May 3, 2013

To: Fraser Surrey Docks – Jurgen Franke P.Eng.

Purpose of Memorandum:

To provide an overview including design criteria of the proposed dust suppression systems ie water sprays, including the treatment and disposal of coal laden runoff water.

Dust Suppression by Water Sprays:

(See Appendix A for details on the proposed spray types and design criteria)

Dust Suppression by Water Sprays will be installed at:

1. Railcar Dumper – misting sprays which produce very small droplets to knock any fugitive dust out of the air plus larger nozzle sprays to wet coal as it is being dumped. The misting sprays will use fresh water (necessary to avoid nozzle clogging). The large nozzle sprays will use *recycled water* (see following section).

2. Railcar Wash – after dumping the railcars will pass under a spray arch to wash off any residual coal which otherwise could generate dust on their return journey. The spray arch will use recycled water.

3. Spraybars on conveyor- the surface of the coal on the conveyor belts will be wetted with recycled water.

4. Transfers will have misting sprays, similar to dumpers, using fresh water.

5. Shiploader will have medium size nozzles and fine misting nozzles to mitigate dust generated by falling coal. These will be supplied with fresh water.

6. Emergency coal stockpile – Large volume industrial sprays ("Big Guns") using fresh water will be used to keep the stockpile moist. This is expected to be an intermittent requirement as emergency stockpile will be an infrequent occurrence. Also this is a seasonal requirement in that during the rainy winter months, there is often no need to wet the piles. The sprays will be supplied through agricultural sprinkler piping which can be relocated or removed as necessary.

7. Coal Barges – After loading, the coal barges will be wetted down by Big Guns on the dock. Similar to the emergency coal pile, the Big Guns will be supplied with fresh water

in agricultural piping. The requirement to wet down the barges will likely not be necessary during the wet winter months. Spraying frequency and duration will be controlled by a PLC program to minimize risk of excessive water application

Portable Water Spray in Operation

The sprays can be relocated to suit the configuration of a coal pile the prevailing wind direction

Railcar wash in operation.

Wastewater Management System
(See Schematic Sketch)

Wastewater on a coal terminal will fall into three categories:

1. Wastewater Slurry

Coal terminals generate a surprising amount of coal laden wastewater (slurry) from:

- washdowns of transfers and equipment
- rainfall on coal handling areas
- flushing of dumper and transfer spillage
- railcar wash
- stockpile runoff

The suspended solids content of the slurry varies widely depending upon the source and the flow rate but it is typically in the range of 800 ppm to 5000 ppm or higher.

2. Recycled Water

After settling in primary and secondary settlement ponds, the suspended solids content will be reduced so that it can be recycled on site for:

- reuse in the railcar wash
- reuse in the dumper for flushing and moisture addition to coal
- application to coal on belt to increase moisture content

The suspended solids content in the recycled water will vary depending upon the fineness of the suspended solids content in the wastewater and the overflow rate of the settlement ponds. It is desirable to keep the suspended solids content below 500 ppm for the above uses. Recycled water is unsuitable for fine misting sprays as it will clog the nozzles. In the Fraser Surrey Docks proposed system it is also considered unsuitable for wetting down the barges and the emergency coal pile due to the possibility of overspray into the Fraser River.

Although much of the recycled water is consumed in application to the coal, there is an inevitable excess of water due to rainfall and equipment washdowns. This is particularly so in the wet winter months.

3. Treated Wastewater for disposal

Excess recycled water can be discharged to the Metro Vancouver Sanitary sewer (under permit) if the suspended solids content is less than 600 ppm.

Components of Fraser Surrey Docks Wastewater Management System:

1) Secondary Settling Pond with Transfer Pump A secondary settling pond with a slurry handling pump will be installed in the vicinity of the shiploader to pump all the slurry wastewater generated in this portion of the site to the settlement ponds. The paving in the vicinity of the shiploader will be graded to direct local drainage to the pond.

2) Emergency Coal Stockpile Drainage Collection System: Drainage from the emergency coal stockpile will be collected in asphalt swales surrounding the area which will drain into sump with two outgoing pipes each a valve. One pipe will be connected to the Slurry Sump and the other connected to the storm drain. When there is actually coal in the stockpile area the valve on the pipe connected to the sump will be opened while the other valve remains closed. When the coal pile is removed and after the stockpile area is thoroughly washed down, the valve on the pipe to the storm drain will be opened and the valve on the pipe to the sump will be closed. This arrangement prevents large amounts of relatively clean storm runoff from being sent to the primary/secondary settling pond.

3) Primary/Secondary Settlement Pond: The primary settling pond will be located in the general vicinity of the dumper. (See Appendix B for a general description and approximate size) This pond will receive slurry wastewater from:

   a) Pump in Secondary Settling Pond at shiploader area
   b) Local drainage and washdowns of transfers
   c) Flushing water from Dumper
   d) Run off from Railcar wash

   The purpose of the primary/secondary settlement pond is to reduce the suspended solids in the slurry wastewater so that it can be recycled as described preceding.

4) Recycle Pump: This will be a submersible high volume pump located in a sump at the end of the secondary pond. There will be a freshwater supply pipe to the sump to provide makeup water to augment the recycle water when necessary, typically in the dry summer months.

5) Overflow to Sanitary Sewer: During the wet winter months there will be an excess of water in the primary and secondary ponds due to stormwater runoff and equipment washdowns. The excess water will flow over a weir in the recycle pump sump to discharge to the sanitary sewer.

6) Flushing Sprays in Dumper: To avoid the buildup of spilled coal on the floor of the dumper, high volume flushing sprays will run continuously using recycled water. The wastewater slurry generated by this flushing out will be directed back to the primary settling pond.

7) Railcar Wash: As the railcars are positioned for dumping, they will pass under a spray arch which will be supplied with recycle water also. The runoff from the railcar wash will be directed back to the primary settling pond.

8) Wetting down of Coal on Belt: Recycled water will be sprayed on the surface of the coal on the conveyor belt at the dumper and transfer (to be confirmed). This surface wetting will mitigate the problem of wind generated dust.

NOTES

1. ALL INFRASTRUCTURE AND ABOVE GROUND PIPING SHOWN SCHEMATICALLY
2. NO UNDERGROUND UTILITIES ARE SHOWN.
3. DUMPER BUILDING NOT SHOWN ON PLAN

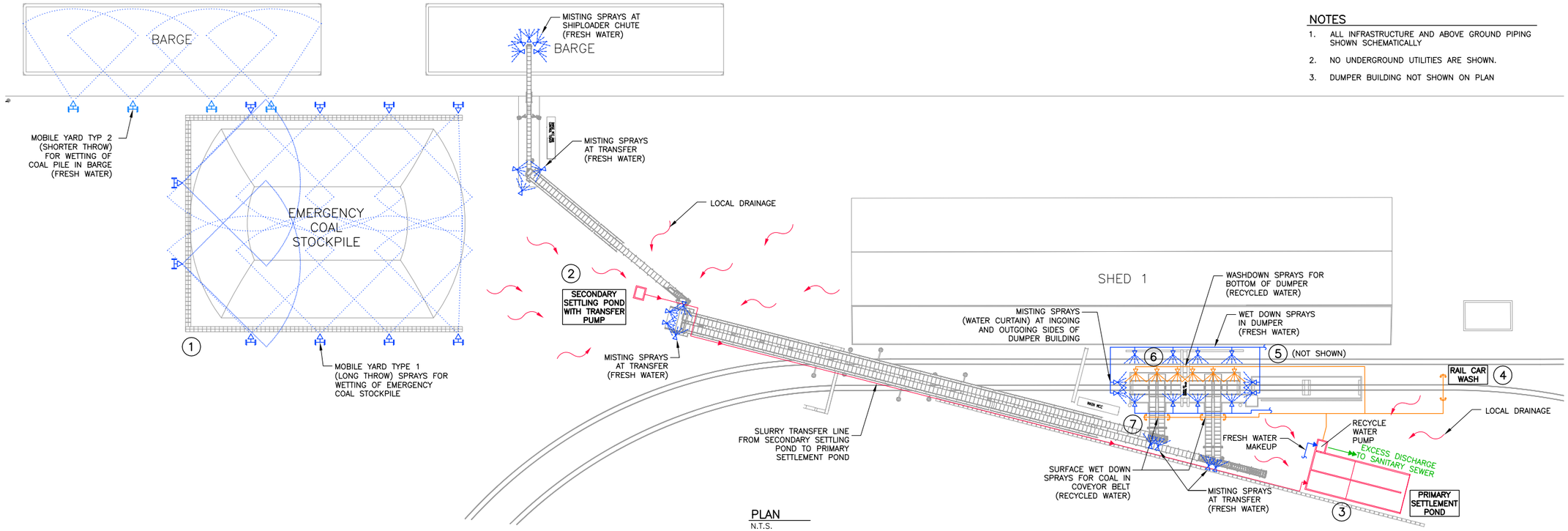

PLAN
N.T.S.

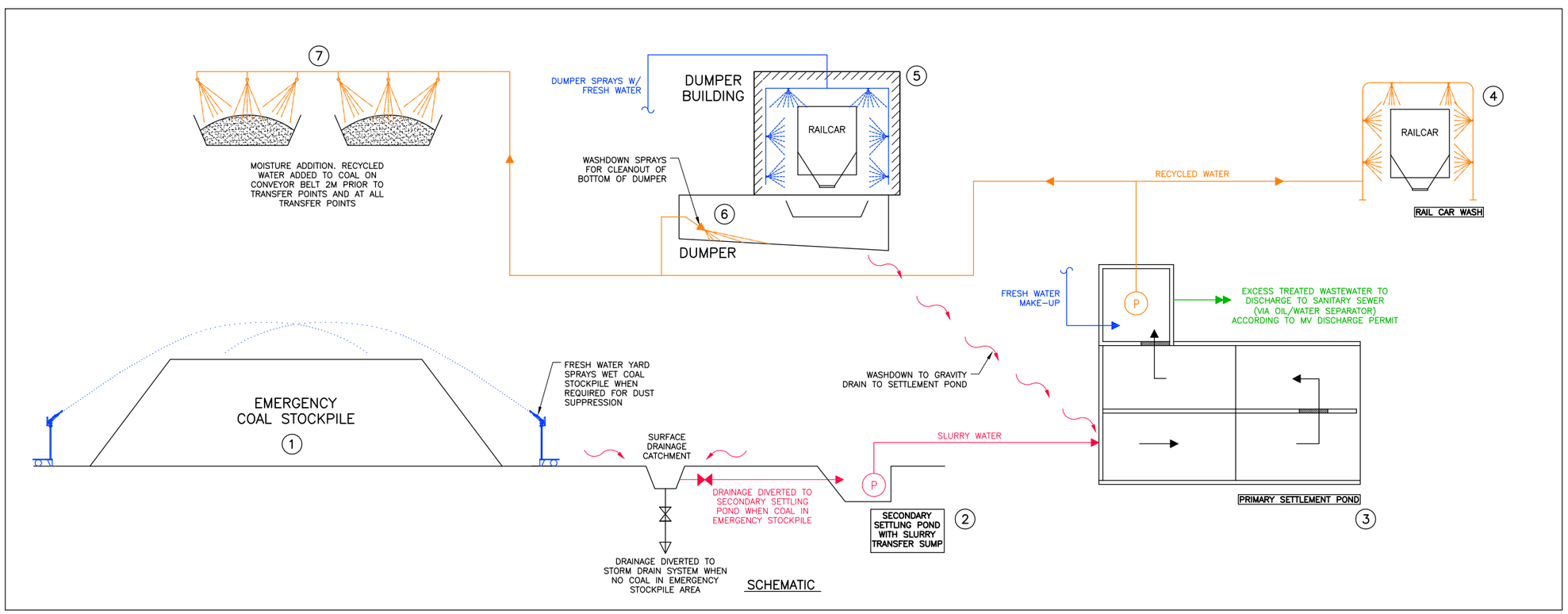

SCHEMATIC

REFERENCE DRAWINGS	
DRAWING NUMBER	REV.

NO.	BY	DATE	DESCRIPTION
P2	CV	MAY07/13	ISSUED FOR MEMORANDUM 2113-1
P1	CV	MAY06/13	ISSUED FOR REVIEW

REVISION

SEAL:

DATE:

CONSULTANT:

Omni ENGINEERING INC.
#206 E. HASTINGS STREET
VANCOUVER, BC V5K 2A9
PH: 604 · 298 · 0508
FAX: 604 · 298 · 0536

CLIENT:
FRASER SURREY DOCKS LP
Pacific Rim Stevedoring Ltd.

PROJECT:
FRASER SURREY DOCKS LP
PROPOSED COAL LOADOUT FACILITY

DRAWING TITLE:
WATER SPRAYS AND WASTEWATER MANAGEMENT SCHEMATIC

ENGINEER:	DS	DATE:	MAY03/13
DESIGN BY:	DS	SCALE:	AS SHOWN
DRAWN BY:	CV	ACAD FILE NO:	2113
DRAWING NUMBER:	2113-SK001	REVISION NUMBER:	P2

Filename: Z:\Omni Projects\2113 Fraser Surrey Docks Dust Suppression\Omni Drawings\2113-SK001 (P2).dwg - Layout1
Last Saved: May. 06/13 9:18pm Plotted: May. 07/13

APPENDIX A – DESIGN OF THE WATER SPRAYS

Water is used for dust suppression in two different ways:

1. WETDOWN COAL STOCKPILE AND LOADED BARGES: To keep coal piles wet and prevent the generation of dust by wind. This is done with large nozzle sprinklers such as the Nelson Big Gun which have specifically been designed for this purpose. They are similar to agricultural sprinklers but have a higher trajectory (43 degrees) which is approximately the angle of repose of a coal pile. The nozzles have a very large orifice, up to 1.2”, to provide a high volume of water and long throw. Droplet size is not critical. Coal is to some degree hydrophobic and care has to be taken to limit the duration of the sprays to avoid a pile washout and/or excessive runoff.

   Design of the wet down system will include the selection of appropriate sized Big Gun sprays, layout to provide full coverage and a PLC control system to sequence them and to avoid overspraying.

   The following pages contain some general information on the Big Gun spray nozzles proposed for this purpose.

INDUSTRIAL Applications

the original BIG GUN® SPRINKLER

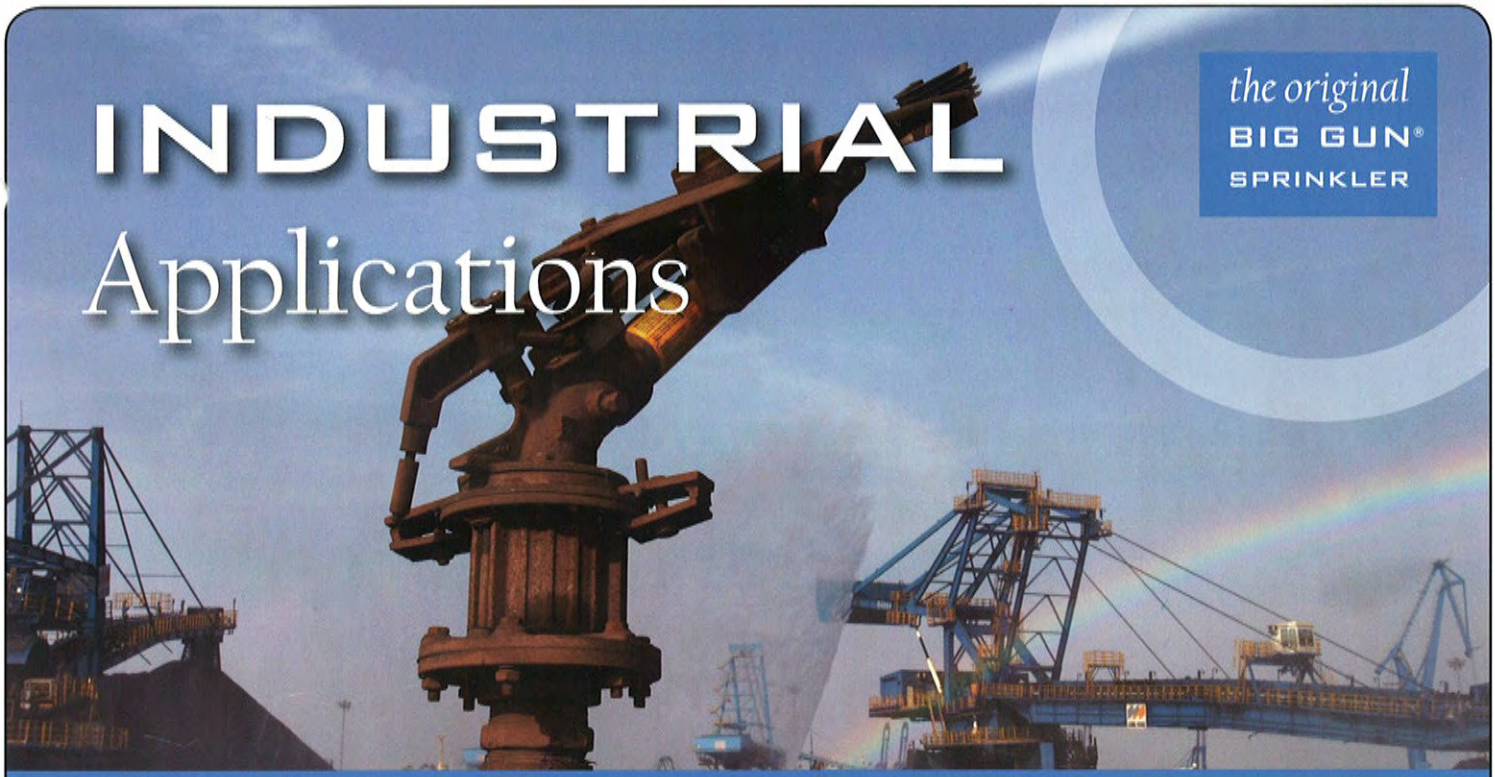

Why choose a Nelson Big Gun®

- The **Nelson name** is synonymous with the best quality available.
- **Heavy-duty construction** ensures long wear life & reliability.
- **Greatest range of options.** Full & part-circle sprinklers available in a variety of trajectory, nozzle & coating options.
- **Valve combinations available** for maximum system efficiency.
- **Easy to operate, maintain and repair** with readily available parts and documentation.

Advantages for Industrial Applications

- Efficient dust suppression.
- High volume in short time.
- Rugged durability in dirty & corrosive conditions.
- Large nozzles less likely to plug, filtration requirements minimal.
- All ball bearings are sealed.

NELSON
WWW.NELSONIRRIGATION.COM

IT'S THE ONE FOR THE JOB

Nelson Big Gun® sprinklers are ideal for a wide range of industrial applications. With a full range of models available (see *The Original Big Gun®* brochure), flow rates of 30-1200 GPM (6.8-275 m^3/hr) can be achieved with maximum uniformity to match a variety of needs.

MINING DUST SUPPRESSION

The rugged durability of Nelson Big Gun® sprinklers make them a favorite for dust suppression. Big Guns are preferred because of the ability to move a large amount of water in a short time. The large nozzle is less likely to plug and the filtration requirements are minimal. All bearings on the gun are sealed ball bearings. Some sprinklers are mounted on high towers in order to throw over the piles. Alternatively, a high trajectory Big Gun sprinkler (fixed 43° and adjustable 15-45° models available) can achieve the necessary stream height to reduce tower height and clear the top of the piles.

SPECIAL OPTIONS:

ANODIZED, POWDER COATED AND STAINLESS STEEL BIG GUNS® for sprinkling with corrosive waters.

COUNTER BALANCE KIT for operation of the Big Gun® with a tilted riser.

WEDGE INSERT for modified trajectory.

HEAVY DUTY BRONZE BRAKE for operation in environments with airborne, abrasive, dust particles (100 Series only).

BIG GUN® PERFORMANCE FOR 43° MODELS

R = Radius of Throw; **H** = Maximum Stream Height; **rH** = Distance from Big Gun to Maximum Stream Height
(See *The Original Big Gun®* brochure or www.nelsonirrigation.com for performance information of 24° models.)

SR75DS TAPER RING NOZZLE — 43° TRAJECTORY (U.S. UNITS - RADIUS IN FEET)

	0.4"				0.45"				0.5"				.55"				.6"				.65"				.7"				.75"				.8"			
PSI	GPM	R	H	rH	GPM	R	H	rH	GPM	R	H	rH	GPM	R	H	rH	GPM	R	H	rH	GPM	R	H	rH	GPM	R	H	rH	GPM	R	H	rH	GPM	R	H	rH
30	—	—	—	—	—	—	—	—	37	66	28	49	45	66	30	50	55	69	30	51	64	72	31	55	75	76	32	56	87	78	33	58	99	80	34	60
40	27	62	30	49	35	67	31	50	43	71	31	52	52	75	33	53	63	79	33	56	74	82	35	61	87	85	35	63	98	89	37	64	112	92	39	66
50	30	67	31	50	39	72	32	52	48	78	32	54	59	81	34	56	70	85	36	60	83	88	39	64	95	92	42	67	109	96	43	68	123	99	45	71
60	33	70	32	52	42	77	33	55	53	82	33	59	64	87	35	62	77	92	38	63	91	95	43	67	104	99	46	70	120	102	47	71	136	106	48	73
70	36	73	33	54	45	81	33	58	57	87	34	62	69	92	37	66	83	97	43	69	98	101	46	72	113	106	49	75	129	108	50	76	147	113	52	78
80	39	76	34	58	49	86	36	62	61	93	37	66	74	97	41	70	89	102	45	73	105	107	48	77	121	111	52	80	138	114	53	81	158	118	55	83

SR75DS TAPER RING NOZZLE — 43° TRAJECTORY (METRIC UNITS - RADIUS IN METERS)

	10.2 mm				11.4 mm				12.7 mm				14.0 mm				15.2 mm				16.5 mm				17.8 mm				19.1 mm				20.3 mm			
kg/cm²	M³/H	R	H	rH	M³/H	R	H	rH	M³/H	R	H	rH	M³/H	R	H	rH	M³/H	R	H	rH	M³/H	R	H	rH	M³/H	R	H	rH	M³/H	R	H	rH	M³/H	R	H	rH
2.50	—	—	—	—	7.6	23	9.2	14	9.4	24	9.5	15	11.4	26	9.7	15	13.6	27	9.9	16	16.0	28	10.2	17	18.5	30	10.3	18	21.1	31	10.7	19	24.0	32	11.5	20
3.00	6.6	23	9.2	15	8.3	25	9.5	15	10.3	26	9.7	16	12.4	28	10.1	16	14.9	29	10.4	17	17.6	30	11.0	19	20.3	31	11.0	19	23.1	33	11.6	20	26.3	34	12.2	21
3.50	7.1	24	9.5	15	9.0	26	9.8	16	11.1	28	9.8	16	13.4	29	10.4	17	16.1	31	11.0	18	19.0	31	11.9	20	21.9	33	12.8	20	25.0	34	13.1	21	28.4	36	13.7	22
4.00	7.6	25	9.6	15	9.6	26	9.8	16	11.9	29	9.9	17	14.4	30	10.5	18	17.2	32	11.3	19	20.3	33	12.2	20	23.4	35	13.2	21	26.7	36	13.4	21	30.4	37	14.1	22
4.50	8.1	26	9.7	16	10.2	28	9.9	16	12.6	30	10.0	17	15.2	32	10.7	18	18.3	33	11.7	19	21.5	35	12.6	20	24.8	37	13.5	21	28.4	38	13.8	22	32.3	39	14.4	22
5.00	8.5	26	10.1	16	10.8	29	10.1	18	13.3	32	10.4	19	16.1	33	11.3	20	19.3	35	13.1	21	22.7	36	14.0	22	26.1	38	14.9	23	29.9	39	15.2	23	34.0	41	15.8	24
5.50	8.9	27	10.4	18	11.3	31	11.0	19	13.9	33	11.3	20	16.9	35	12.5	21	20.2	36	13.7	22	23.8	38	14.6	24	27.4	40	15.9	24	31.3	41	16.1	25	35.7	42	16.8	25
6.00	9.3	28	10.7	19	11.8	31	11.9	20	14.6	34	12.2	21	17.6	36	13.7	23	21.1	37	14.3	24	24.8	39	15.3	25	28.6	41	16.8	26	32.7	42	17.0	26	37.2	43	17.7	27

SR100DS TAPER BORE NOZZLE — 43° TRAJECTORY (U.S. UNITS - RADIUS IN FEET)

	0.6"				0.65"				0.7"				.75"				.8"				.85"				.9"				1.0"			
PSI	GPM	R	H	rH	GPM	R	H	rH	GPM	R	H	rH	GPM	R	H	rH	GPM	R	H	rH	GPM	R	H	rH	GPM	R	H	rH	GPM	R	H	rH
50	74	98	36	59	87	108	40	65	100	117	44	71	115	120	44	72	130	123	46	75	150	125	46	76	165	129	47	78	204	136	48	82
60	81	102	39	63	96	109	44	68	110	121	47	74	126	124	48	75	143	127	49	77	164	131	49	79	182	133	50	81	224	140	51	85
70	88	105	43	68	103	114	47	73	120	125	50	79	136	128	51	81	155	131	53	83	177	133	54	85	197	138	55	87	243	144	56	91
80	94	111	46	74	110	119	49	79	128	129	53	84	146	132	54	86	165	135	56	88	189	138	56	90	210	142	59	92	258	149	60	97
90	100	118	49	79	117	123	52	83	135	133	56	87	155	136	57	90	175	139	59	93	201	143	60	94	223	146	62	95	274	153	64	99
100	106	120	51	82	123	128	54	87	143	137	58	92	163	140	59	93	185	143	61	95	212	148	62	98	235	150	65	101	289	157	67	105
110	111	122	52	84	129	132	56	89	150	141	60	94	171	144	62	96	195	147	64	98	222	151	65	100	247	154	67	103	304	162	69	108
120	115	124	53	85	135	135	56	90	157	145	61	95	179	148	63	99	204	151	65	103	232	155	67	105	258	159	69	107	320	166	71	111

SR100DS TAPER BORE NOZZLE — 43° TRAJECTORY (METRIC UNITS - RADIUS IN METERS)

	15.2 mm				16.5 mm				17.8 mm				19.1 mm				20.3 mm				21.6 mm				22.9 mm				25.4 mm			
kg/cm²	M³/H	R	H	rH	M³/H	R	H	rH	M³/H	R	H	rH	M³/H	R	H	rH	M³/H	R	H	rH	M³/H	R	H	rH	M³/H	R	H	rH	M³/H	R	H	rH
3.5	15.6	30	11	18	18.3	33	12	20	21.0	36	13	22	24.1	37	14	22	27.5	38	14	23	31.5	38	14	23	34.8	39	14	24	42.8	42	15	25
4	18.0	31	12	19	21.1	33	13	21	24.6	37	14	22	27.8	38	14	23	31.2	38	15	23	36.2	40	15	24	40.4	40	15	25	49.5	42	15	26
5	20.1	32	13	21	23.6	35	14	23	27.5	38	15	24	31.2	39	16	25	34.9	40	16	26	40.5	41	17	26	45.2	42	17	27	55.6	44	17	28
6	22.1	35	15	24	25.9	37	16	25	30.1	40	17	26	34.3	41	17	27	38.2	42	18	28	44.5	43	18	28	49.5	44	19	29	60.5	46	19	30
7	23.8	37	16	25	27.9	39	17	27	32.5	42	18	28	37.0	43	18	28	41.3	44	19	29	48.0	45	19	30	53.5	46	20	31	65.5	48	21	32
8	25.5	38	16	26	29.7	41	17	27	34.8	44	18	29	39.4	45	19	30	44.1	46	20	31	51.2	47	20	31	57.2	48	21	32	70.2	50	21	33

SR150DS TAPER BORE NOZZLE — 43° TRAJECTORY (U.S. UNITS - RADIUS IN FEET)

	0.7"				0.8"				0.9"				1.0"				1.1"				1.2"				1.3"			
PSI	GPM	R	H	rH	GPM	R	H	rH	GPM	R	H	rH	GPM	R	H	rH	GPM	R	H	rH	GPM	R	H	rH	GPM	R	H	rH
50	100	117	44	71	130	123	46	75	165	129	47	78	205	136	48	82	255	140	49	85	300	149	50	90	350	153	51	93
60	110	121	47	74	143	127	49	77	182	133	50	81	225	140	51	85	275	145	52	88	330	154	53	94	385	157	54	96
70	120	125	50	79	155	131	53	83	197	138	55	87	245	144	56	91	295	151	57	95	355	158	59	100	415	161	60	101
80	128	129	53	84	165	135	56	88	210	142	59	92	260	149	60	97	315	162	61	105	380	163	64	106	445	167	65	112
90	135	133	56	87	175	139	59	93	223	146	62	95	275	153	64	99	335	165	65	107	405	168	68	109	475	171	70	114
100	143	137	58	92	185	143	61	96	235	150	65	101	290	157	67	105	355	167	68	110	425	172	71	113	500	176	73	116
110	150	141	60	94	195	147	64	98	247	154	67	103	305	162	69	108	370	172	70	115	445	176	74	118	525	180	76	121
120	157	145	61	97	204	151	65	103	258	159	69	107	320	166	71	111	385	177	72	119	465	180	77	122	545	183	79	123

SR150DS TAPER BORE NOZZLE — 43° TRAJECTORY (METRIC UNITS - RADIUS IN METERS)

	17.8 mm				20.3 mm				22.9 mm				25.4 mm				27.9 mm				30.5 mm				33.0 mm			
kg/cm²	M³/H	R	H	rH	M³/H	R	H	rH	M³/H	R	H	rH	M³/H	R	H	rH	M³/H	R	H	rH	M³/H	R	H	rH	M³/H	R	H	rH
3.5	23.0	36	13	22	29.8	38	14	23	37.8	39	14	24	46.9	42	15	25	57.1	43	15	26	68.3	46	15	28	80.1	47	16	28
4	24.6	37	14	22	31.9	38	15	23	40.5	40	15	25	50.1	42	15	26	61.0	44	16	27	73.0	47	16	28	85.7	48	16	29
5	27.5	38	15	25	35.7	40	16	26	45.2	42	17	27	56.0	44	17	28	68.2	47	18	30	81.7	49	18	31	95.8	50	19	32
6	30.1	40	17	26	39.1	42	18	28	49.5	44	19	29	61.3	46	19	30	74.7	50	19	32	89.5	51	20	33	105	52	21	35
7	32.5	42	18	28	42.2	44	19	29	53.5	46	20	31	66.3	48	21	32	80.7	51	21	34	96.6	53	22	35	113	54	22	36
8	36.9	44	18	29	45.1	46	20	31	57.2	48	21	32	70.8	50	21	33	86.3	53	22	36	103	54	23	37	121	55	24	37

Big Gun® Performance data has been obtained under ideal test conditions and may be adversely affected by wind, poor hydraulic entrance conditions or other factors. Test riser height of 3 feet (0.91 meters) above measurement surface. No representation regarding droplet condition, uniformity, application rate, or suitability for a particular application is made herein.

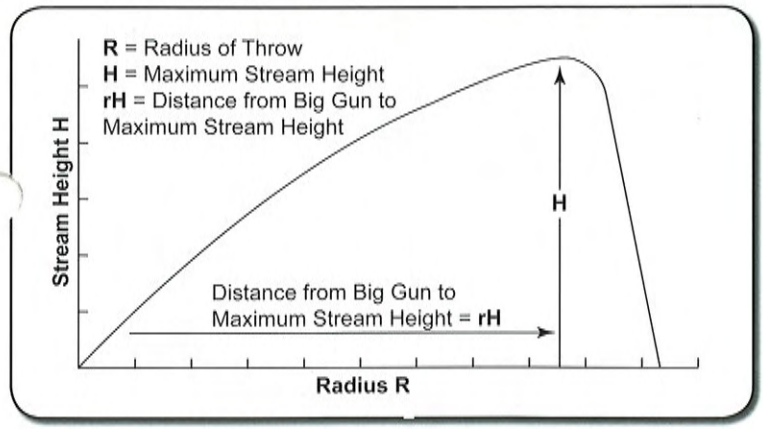

SR75DS 43°

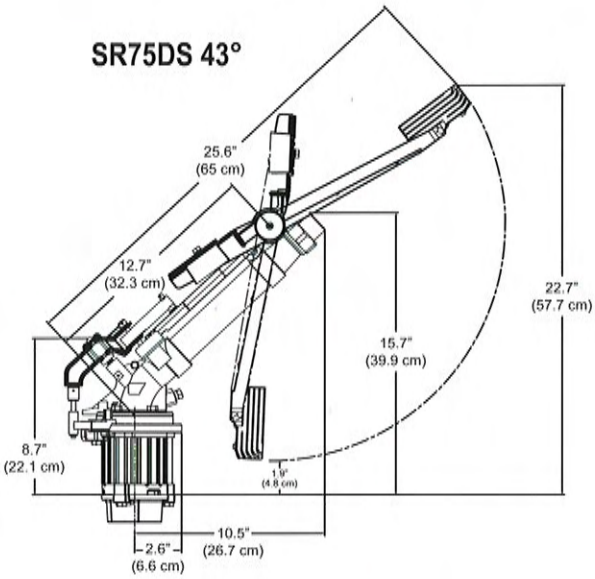

NOTE: The rotation speed of the gun is an important factor in some dust control applications. In general the rotation of the gun is 2-3 minutes when the mid-range pressure and nozzle are used. Drive arm speed adjustment can increase the rotation speed to twice as fast if more frequent wetting is wanted. A full circle Big Gun has ½ the water application rate of a half circle Big Gun with the same nozzle. The half circle Big Gun will pass over a specific location twice as often as a full circle Big Gun.

Contact the factory for information on the SRA100, SRA150 and the 12° Wedge Kit.

SR100DS 43°

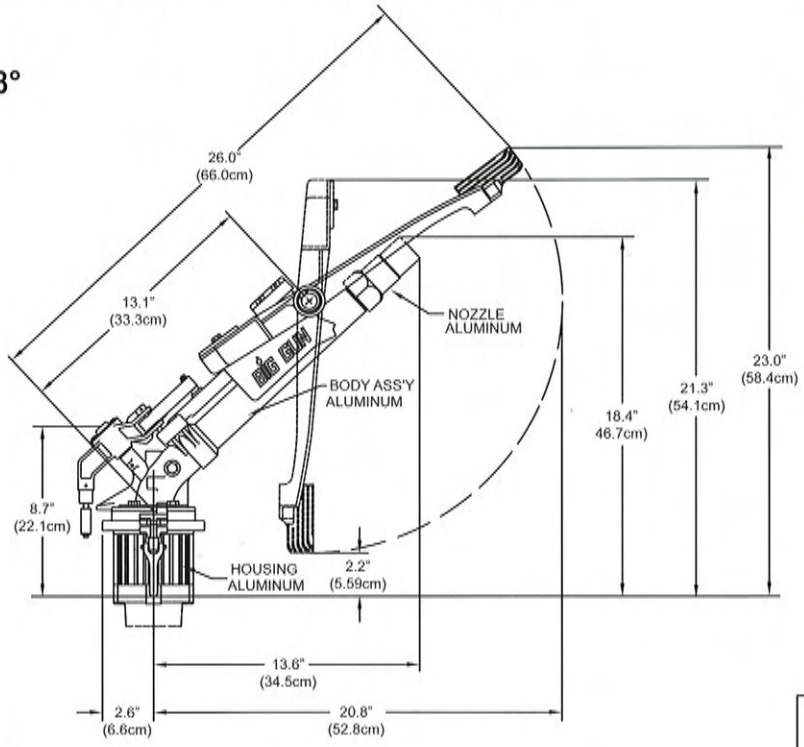

75 & 100 SERIES FLANGES

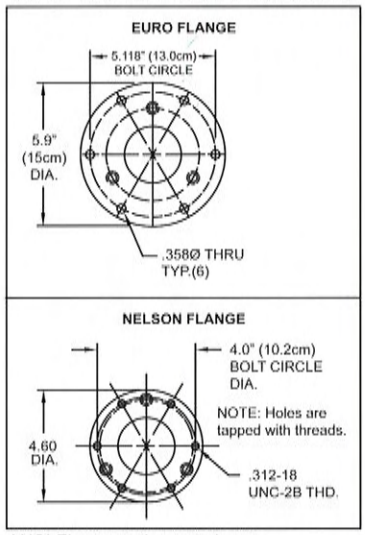

ANSI Flange option not shown.

SR150DS 43°

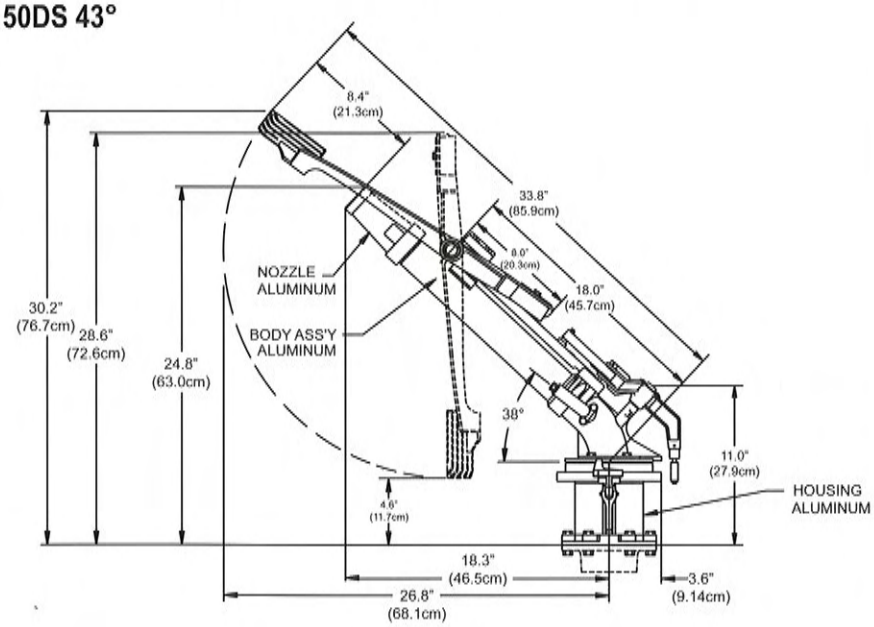

150 SERIES FLANGES

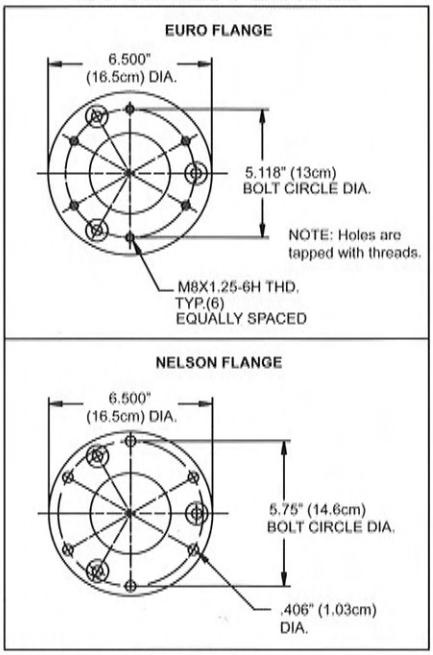

ANSI Flange option not shown.

BIG GUN® PERFORMANCE FOR 43° MODELS

R = Radius of Throw; **H** = Maximum Stream Height; **rH** = Distance from Big Gun to Maximum Stream Height
(See *The Original Big Gun®* brochure or www.nelsonirrigation.com for performance information of 24° models.)

SR75DS TAPER RING NOZZLE — 43° TRAJECTORY (U.S. UNITS - RADIUS IN FEET)

	0.4"				0.45"				0.5"				.55"				.6"				.65"				.7"				.75"				.8"			
PSI	GPM	R	H	rH	GPM	R	H	rH	GPM	R	H	rH	GPM	R	H	rH	GPM	R	H	rH	GPM	R	H	rH	GPM	R	H	rH	GPM	R	H	rH	GPM	R	H	rH
30	—	—	—	—	—	—	—	—	37	66	28	49	45	66	30	50	55	69	30	51	64	72	31	55	75	76	32	56	87	78	33	58	99	80	34	60
40	27	62	30	49	35	67	31	50	43	71	31	52	52	75	33	53	63	79	33	56	74	82	35	61	87	85	35	63	98	89	37	64	112	92	39	66
50	30	67	31	50	39	72	32	52	48	78	32	54	59	81	34	56	70	85	36	60	83	88	39	64	95	92	42	67	109	96	43	68	123	99	45	71
60	33	70	32	52	42	77	33	55	53	82	33	59	64	87	35	62	77	92	38	63	91	95	43	67	104	99	46	70	120	102	47	71	136	106	48	73
70	36	73	33	54	45	81	33	58	57	87	34	62	69	92	37	66	83	97	43	69	98	101	46	72	113	106	49	75	129	108	50	76	147	113	52	78
80	39	76	34	58	49	86	36	62	61	93	37	66	74	97	41	70	89	102	45	73	105	107	48	77	121	111	52	80	138	114	53	81	158	118	55	83

SR75DS TAPER RING NOZZLE — 43° TRAJECTORY (METRIC UNITS - RADIUS IN METERS)

	10.2 mm				11.4 mm				12.7 mm				14.0 mm				15.2 mm				16.5 mm				17.8 mm				19.1 mm				20.3 mm			
kg/cm²	M³/H	R	H	rH	M³/H	R	H	rH	M³/H	R	H	rH	M³/H	R	H	rH	M³/H	R	H	rH	M³/H	R	H	rH	M³/H	R	H	rH	M³/H	R	H	rH	M³/H	R	H	rH
2.50	—	—	—	—	7.6	23	9.2	14	9.4	24	9.5	15	11.4	26	9.7	15	13.6	27	9.9	16	16.0	28	10.2	17	18.5	30	10.3	18	21.1	31	10.7	19	24.0	32	11.5	20
3.00	6.6	23	9.2	15	8.3	25	9.5	15	10.3	26	9.7	16	12.4	28	10.1	16	14.9	29	10.4	17	17.6	30	11.0	19	20.3	31	11.0	19	23.1	33	11.6	20	26.3	34	12.2	21
3.50	7.1	24	9.5	15	9.0	26	9.8	16	11.1	28	9.8	16	13.4	29	10.4	17	16.1	31	11.0	18	19.0	31	11.9	20	21.9	33	12.8	20	25.0	34	13.1	21	28.4	36	13.7	22
4.00	7.6	25	9.6	15	9.6	26	9.8	16	11.9	29	9.9	17	14.4	30	10.5	18	17.2	32	11.3	19	20.3	33	12.2	20	23.4	35	13.2	21	26.7	36	13.4	21	30.4	37	14.1	22
4.50	8.1	26	9.7	16	10.2	28	9.9	16	12.6	30	10.0	17	15.2	32	10.7	18	18.3	33	11.7	19	21.5	35	12.6	20	24.8	37	13.5	21	28.4	38	13.8	22	32.3	39	14.4	22
5.00	8.5	26	10.1	16	10.8	29	10.1	18	13.3	32	10.4	19	16.1	33	11.3	20	19.3	35	13.1	21	22.7	36	14.0	22	26.1	38	14.9	23	29.9	39	15.2	23	34.0	41	15.8	24
5.50	8.9	27	10.4	18	11.3	31	11.0	19	13.9	33	11.3	20	16.9	35	12.5	21	20.2	36	13.7	22	23.8	38	14.6	24	27.4	40	15.9	24	31.3	41	16.1	25	35.7	42	16.8	25
6.00	9.3	28	10.7	19	11.8	31	11.9	20	14.6	34	12.2	21	17.6	36	13.7	23	21.1	37	14.3	24	24.8	39	15.3	25	28.6	41	16.8	26	32.7	42	17.0	26	37.2	43	17.7	27

SR100DS TAPER BORE NOZZLE — 43° TRAJECTORY (U.S. UNITS - RADIUS IN FEET)

	0.6"				0.65"				0.7"				.75"				.8"				.85"				.9"				1.0"			
PSI	GPM	R	H	rH	GPM	R	H	rH	GPM	R	H	rH	GPM	R	H	rH	GPM	R	H	rH	GPM	R	H	rH	GPM	R	H	rH	GPM	R	H	rH
50	74	98	36	59	87	108	40	65	100	117	44	71	115	120	44	72	130	123	46	75	150	125	46	76	165	129	47	78	204	136	48	82
60	81	102	39	63	96	109	44	68	110	121	47	74	126	124	48	75	143	127	49	77	164	131	49	79	182	133	50	81	224	140	51	85
70	88	105	43	68	103	114	47	73	120	125	50	79	136	128	51	81	155	131	53	83	177	133	54	85	197	138	55	87	243	144	56	91
80	94	111	46	74	110	119	49	79	128	129	53	84	146	132	54	86	165	135	56	88	189	138	56	90	210	142	59	92	258	149	60	97
90	100	118	49	79	117	123	52	83	135	133	56	87	155	136	57	90	175	139	59	93	201	143	60	94	223	146	62	95	274	153	64	99
100	106	120	51	82	123	128	54	87	143	137	58	92	163	140	59	93	185	143	61	95	212	148	62	98	235	150	65	101	289	157	67	105
110	111	122	52	84	129	132	56	89	150	141	60	94	171	144	62	96	195	147	64	98	222	151	65	100	247	154	67	103	304	162	69	108
120	115	124	53	85	135	135	56	90	157	145	61	95	179	148	63	99	204	151	65	103	232	155	67	105	258	159	69	107	320	166	71	111

SR100DS TAPER BORE NOZZLE — 43° TRAJECTORY (METRIC UNITS - RADIUS IN METERS)

	15.2 mm				16.5 mm				17.8 mm				19.1 mm				20.3 mm				21.6 mm				22.9 mm				25.4 mm			
kg/cm²	M³/H	R	H	rH	M³/H	R	H	rH	M³/H	R	H	rH	M³/H	R	H	rH	M³/H	R	H	rH	M³/H	R	H	rH	M³/H	R	H	rH	M³/H	R	H	rH
3.5	15.6	30	11	18	18.3	33	12	20	21.0	36	13	22	24.1	37	14	22	27.5	38	14	23	31.5	38	14	23	34.8	39	14	24	42.8	42	15	25
4	18.0	31	12	19	21.1	33	13	21	24.6	37	14	22	27.8	38	14	23	31.2	38	15	23	36.2	40	15	24	40.4	40	15	25	49.5	42	15	26
5	20.1	32	13	21	23.6	35	14	23	27.5	38	15	24	31.2	39	16	25	34.9	40	16	26	40.5	41	17	26	45.2	42	17	27	55.6	44	17	28
6	22.1	35	15	24	25.9	37	16	25	30.1	40	17	26	34.3	41	17	27	38.2	42	18	28	44.5	43	18	28	49.5	44	19	29	60.5	46	19	30
7	23.8	37	16	25	27.9	39	17	27	32.5	42	18	28	37.0	43	18	28	41.3	44	19	29	48.0	45	19	30	53.5	46	20	31	65.5	48	21	32
8	25.5	38	16	26	29.7	41	17	27	34.8	44	18	29	39.4	45	19	30	44.1	46	20	31	51.2	47	20	31	57.2	48	21	32	70.2	50	21	33

SR150DS TAPER BORE NOZZLE — 43° TRAJECTORY (U.S. UNITS - RADIUS IN FEET)

	0.7"				0.8"				0.9"				1.0"				1.1"				1.2"				1.3"			
PSI	GPM	R	H	rH	GPM	R	H	rH	GPM	R	H	rH	GPM	R	H	rH	GPM	R	H	rH	GPM	R	H	rH	GPM	R	H	rH
50	100	117	44	71	130	123	46	75	165	129	47	78	205	136	48	82	255	140	49	85	300	149	50	90	350	153	51	93
60	110	121	47	74	143	127	49	77	182	133	50	81	225	140	51	85	275	145	52	88	330	154	53	94	385	157	54	96
70	120	125	50	79	155	131	53	83	197	138	55	87	245	144	56	91	295	151	57	95	355	158	59	100	415	161	60	101
80	128	129	53	84	165	135	56	88	210	142	59	92	260	149	60	97	315	162	61	105	380	163	64	106	445	167	65	112
90	135	133	56	87	175	139	59	93	223	146	62	95	275	153	64	99	335	165	65	107	405	168	68	109	475	171	70	114
100	143	137	58	92	185	143	61	96	235	150	65	101	290	157	67	105	355	167	68	110	425	172	71	113	500	176	73	116
110	150	141	60	94	195	147	64	98	247	154	67	103	305	162	69	108	370	172	70	115	445	176	74	118	525	180	76	121
120	157	145	61	97	204	151	65	103	258	159	69	107	320	166	71	111	385	177	72	119	465	180	77	122	545	183	79	123

SR150DS TAPER BORE NOZZLE — 43° TRAJECTORY (METRIC UNITS - RADIUS IN METERS)

	17.8 mm				20.3 mm				22.9 mm				25.4 mm				27.9 mm				30.5 mm				33.0 mm			
kg/cm²	M³/H	R	H	rH	M³/H	R	H	rH	M³/H	R	H	rH	M³/H	R	H	rH	M³/H	R	H	rH	M³/H	R	H	rH	M³/H	R	H	rH
3.5	23.0	36	13	22	29.8	38	14	23	37.8	39	14	24	46.9	42	15	25	57.1	43	15	26	68.3	46	15	28	80.1	47	16	28
4	24.6	37	14	22	31.9	38	15	23	40.5	40	15	25	50.1	42	15	26	61.0	44	16	27	73.0	47	16	28	85.7	48	16	29
5	27.5	38	15	25	35.7	40	16	26	45.2	42	17	27	56.0	44	17	28	68.2	47	18	30	81.7	49	18	31	95.8	50	19	32
6	30.1	40	17	26	39.1	42	18	28	49.5	44	19	29	61.3	46	19	30	74.7	50	19	32	89.5	51	20	33	105	52	21	35
7	32.5	42	18	28	42.2	44	19	29	53.5	46	20	31	66.3	48	21	32	80.7	51	21	34	96.6	53	22	35	113	54	22	36
8	36.9	44	18	29	45.1	46	20	31	57.2	48	21	32	70.8	50	21	33	86.3	53	22	36	103	54	23	37	121	55	24	37

Big Gun® Performance data has been obtained under ideal test conditions and may be adversely affected by wind, poor hydraulic entrance conditions or other factors. Test riser height of 3 feet (0.91 meters) above measurement surface. No representation regarding droplet condition, uniformity, application rate, or suitability for a particular application is made herein.

2. MISTING NOZZLES To capture fugitive airborne dust. This requires nozzles with very fine orifices to produce small droplets which will capture the fine dust particles. The volumes of water required are minimal. Spraying Systems company " Whirljet" nozzles will be installed in the dumper, at the transfers and at the shiploader for this purpose. The piping to the nozzles is small diameter and it is relatively easy to relocate the misting nozzles if operating experience indicates some particularly troublesome locations.

   The following pages contain some general information on the Whirljet misting nozzles proposed for the this purpose.

Understanding drop size and the role it plays in your dust suppression application

Many important factors determine the overall effectiveness of a dust suppression spray nozzle. One of these factors is drop size, and understanding drop size and its role in nozzle performance will help you select the best spray nozzle for your application.

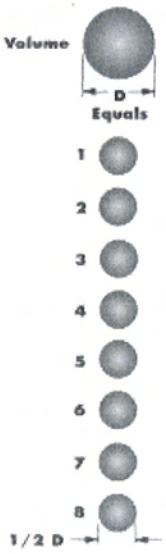

The volume of one large drop equals the volume of eight drops with diameters one-half the size of the large drop.

What is drop size?

Drop size is a by-product of atomization. The process of atomization begins by forcing liquid through a nozzle. The potential energy of the liquid, along with the geometry of the nozzle, causes the liquid to emerge as small ligaments. These ligaments then break up further into very small "pieces," which are usually called drops, droplets, or liquid particles.

Each spray provides a range of drop sizes; this range is referred to as drop size distribution. The drop size distribution is dependent on the nozzle type and will vary significantly from one nozzle type to another.

The importance of drop size in dust suppression stems from the role it plays in Airborne (Fugitive) Dust Knockdown. Once dust particles become airborne the dust reduction application becomes one of capturing, knocking down, or scrubbing many of the particles from the air or gas.

Studies have shown that dust-capturing efficiency depends strongly on the ratio of spray drop size to dust particle size. Dust particles in the range of 2 to 3 microns were best captured with drop of about 100 times the size of the dust particles. For capturing much larger size dust particles, a drop size of approximately the same size or somewhat larger than the particle size would be adequate.

The drop size required for a specific application has an important effect on nozzle selection. Generally, air atomizing nozzles provide the finest drop size followed by hollow cone, flat fan, and full cone nozzles. The range of drop size and a relative comparison between Spraying Systems Co. nozzle drop sizes are represented in Data Sheet 13911-1. The importance of nozzle selection was also emphasized in another U.S. Bureau of Mines (NIOSH) study. In this study, it was shown that full cone and flat fan nozzles were two-thirds as effective as hollow cone nozzles in dust knockdown applications.

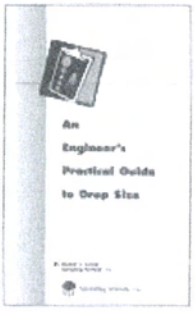

For more information on dust particle size and drop size, Spraying Systems Co. nozzle drop size comparison, or the U.S. Bureau of Mines (NIOSH) Study, contact your local Spraying Systems Co. sales engineer. Your sales engineer will be pleased to provide you with a copy of our "Engineer's Practical Guide to Drop Size". This handy reference tool offers an up-close look at drop size instrumentation, statistics and terminology, and more.

You'll also find the U.S. Bureau of Mines (NIOSH) Study to be a valuable source for technical information on dust knockdown performance of spray nozzles, the characteristics of particles and particle dispersions, and the relative comparison between Spraying Systems Co. nozzle drop sizes.

COMPARATIVE DROP SIZE DATA					
Drop Size Range Microns* Median Volume Diameter	Comparative Subject In Drop Size Range	Time For Drop To Fall 10 Ft. In Seconds	Drift In 3 MPH Wind 10 Ft. Fall Feet	No. of Drops Per Sq. In. If Applied At Rate of 1 Gal Per Acre	Nozzle Group No.*** Nozzle Types And Sizes Generally Falling In Given Drop Size Range
Below .001	Molecular Dimensions				
.001 To 0.1	Smoke	**			
0.1 To 1.0	Fumes	**			
2 To 5	Dry Fog	25400 4070	112000 18000	144060000 9220000	
10 To 40	Wet Fog	1020 64	4500 280	1152500 18000	I
50 To 100	Misty Rain	40 11	175 48	9200 1152	II
200 To 400	Light Rain	4.2 1.9	19 8	144 18	III
500 To 1000	Moderate Rain	1.6 1.1	7 5	9 1	IV
1000 To 2000	Intense Rain	1.1 0.9	5 4	1 21 Per Sq Ft	V
2000 To 5000	Heavy Rain	0.9 0.85	4 3.5	21 Per Sq Ft 1-1/3 Per Sq Ft	VI

Note: *One micron equals 1/25400 of an inch.

**Below 0.1 micron, drops are suspended in air due to molecular shock (Brownian Motion).

***See following pages for listing of Nozzle Group Nos., Nozzle Nos., and pressure ranges.

WhirlJet® SPRAY NOZZLES

STANDARD ANGLE SMALL CAPACITY

A

removable cap
⅛"-¾" NPT or BSPT (F)

AX

removable cap/slope-bottom design
⅛"-¾" NPT or BSPT (F)

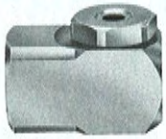

B

removable cap
⅛"-¾" NPT or BSPT (M)

BX

removable cap/slope-bottom design
⅛"-¾" NPT or BSPT (M)

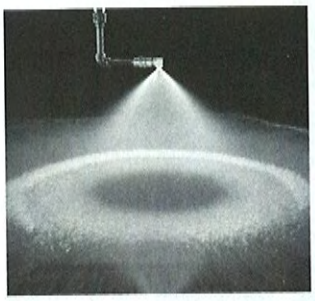

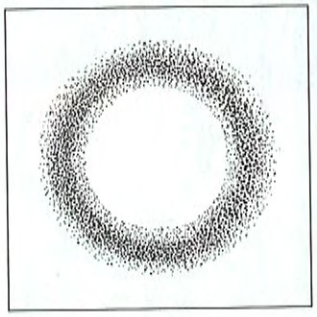

DESIGN FEATURES

Standard WhirlJet spray nozzles feature a hollow cone spray pattern with a ring-shaped impact area and spray angles of 40° to 90°.

They produce a uniform distribution of small to medium-sized droplets over a wide range of flow rates and pressures.

WhirlJet nozzles produce excellent results in applications requiring good atomization of liquids at lower pressures... especially where quick heat transfer or effective air-borne droplet impingement is required.

WhirlJets also provide an important benefit with their large and unobstructed flow passages, which minimize or eliminate clogging.

A and B series small capacity WhirlJet spray nozzles are precision-machined from solid bar stock to exacting internal proportions. They have removable caps and the original design WhirlJet whirlchamber.

AX and BX series small capacity slope bottom WhirlJets feature the same uniform spray distribution and precision two-piece bar stock construction as the A and B series...plus the added advantage of the longer-life slope bottom design...to reduce the "drilling effect" of the fluid vortex in the whirlchamber.

COMMON APPLICATIONS

- Washing gas and air to remove fly ash and other products of combustion
- Gas cooling
- Water cooling
- Metal treating
- Product degreasing
- Suppression and control of fugitive dust
- Brine spraying
- Water aerating

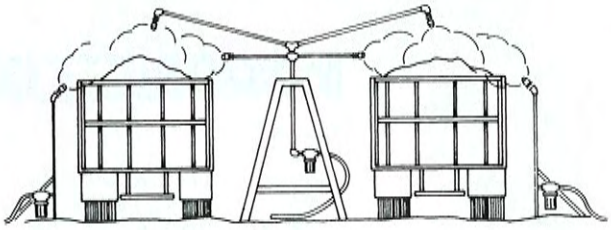

DUST CONTROL

ACCESSORIES

Split-Eyelet Connector	Pressure Gauge	Adjustable Ball Fittings	124 Strainer	Other Accessories
				• Pressure Regulators • Control Valves • Solenoid Valves • Swivel Connectors **SEE SECTION G FOR COMPLETE INFORMATION.**

PERFORMANCE DATA

Nozzle Inlet Conn. NPT or BSPT	NOZZLE TYPE STANDARD (F) Conn. A	(F) Conn. AX	(M) Conn. B	(M) Conn. BX	Capacity Size	Body Inlet Diam. Nom. Inches	Orifice Diam. Nom. Inches	CAPACITY (gallons per minute) 3 psi	5 psi	10 psi	15 psi	20 psi	30 psi	40 psi	60 psi	80 psi	100 psi	SPRAY ANGLE 7 psi	20 psi	80 psi
1/8	●	●	●	●	0.5	1/32	3/64			.05	.06	.07	.09	.10	.12	.14	.16		58°	69°
	●	●	●	●	1	1/16	1/16			.10	.12	.14	.17	.20	.24	.28	.31		64°	76°
	●	●	●	●	2	5/64	5/64		.14	.20	.25	.28	.35	.40	.48	.56	.63	52°	61°	69°
	●	●	●	●	3	3/32	3/32		.21	.30	.37	.42	.52	.60	.73	.85	.95	52°	64°	77°
	●	●	●	●	5	1/8	1/8	.27	.35	.50	.61	.70	.86	1.0	1.2	1.4	1.6	56°	67°	76°
	●	●	●	●	8	5/32	5/32	.44	.57	.80	.98	1.1	1.4	1.6	2.0	2.3	2.5	56°	65°	70°
	●	●	●	●	10	11/64	11/64	.55	.71	1.0	1.2	1.4	1.7	2.0	2.5	2.8	3.2	55°	65°	72°
1/4	●	●	●	●	1	1/16	1/16			.10	.12	.14	.17	.20	.24	.28	.31		53°	67°
	●	●	●	●	2	5/64	5/64			.20	.25	.28	.35	.40	.48	.56	.63		62°	71°
	●	●	●	●	3	3/32	3/32		.21	.30	.37	.42	.52	.60	.73	.85	.95	51°	65°	78°
	●	●	●	●	5	9/64	9/64	.27	.35	.50	.61	.70	.86	1.0	1.2	1.4	1.6	63°	73°	79°
	●	●	●	●	8	5/32	5/32	.44	.56	.80	.98	1.1	1.4	1.6	2.0	2.3	2.5	61°	69°	73°
	●	●	●	●	10	3/16	11/64	.55	.71	1.0	1.2	1.4	1.7	2.0	2.5	2.8	3.2	63°	70°	74°
	●	●	●	●	15	15/64	13/64	.82	1.1	1.5	1.8	2.1	2.6	3.0	3.7	4.2	4.7	63°	71°	72°
3/8	●	●	●	●	5	9/64	1/8	.27	.35	.50	.61	.70	.86	1.0	1.2	1.4	1.6	64°	73°	79°
	●	●	●	●	8	11/64	5/32	.44	.56	.80	.98	1.1	1.4	1.6	2.0	2.3	2.5	62°	70°	74°
	●	●	●	●	10	13/64	11/64	.55	.72	1.0	1.2	1.4	1.7	2.0	2.4	2.8	3.1	64°	72°	75°
	●	●	●	●	15	15/64	7/32	.82	1.1	1.5	1.8	2.1	2.6	3.0	3.7	4.2	4.7	64°	72°	74°
	●	●	●	●	20	9/32	1/4	1.1	1.4	2.0	2.4	2.8	3.5	4.0	4.9	5.6	6.3	63°	70°	74°
	●	●	●	●	25	19/64	19/64	1.4	1.8	2.5	3.1	3.5	4.3	5.0	6.1	7.1	7.9	63°	70°	74°
	●	●	●	●	30	21/64	5/16	1.6	2.1	3.0	3.7	4.2	5.2	6.0	7.3	8.5	9.5	63°	70°	74°
	●		●		15-30.1	15/64	5/16	1.3	1.6	2.3	2.8	3.2	4.0	4.6	5.6	6.5	7.3	40°	50°	54°
	●		●		25-30.1	19/64	5/16	1.5	2.0	2.8	3.4	4.0	4.8	5.6	6.9	8.0	8.9	40°	47°	51°
	●		●		50-50.1	11/32	3/8	2.7	3.5	5.0	6.1	7.1	8.7	10.0	12.3	14.2	15.8	40°	47°	50°
	●		●		50-50.3	11/32	3/8	2.7	3.5	5.0	6.1	7.1	8.7	10.0	12.3	14.2	15.8	72°	76°	78°
1/2	●	●	●	●	25	3/8	1/4	1.4	1.8	2.5	3.1	3.5	4.3	5.0	6.1	7.1	7.9	63°	66°	71°
	●	●	●	●	30	3/8	19/64	1.6	2.1	3.0	3.7	4.2	5.2	6.0	7.3	8.5	9.5	67°	71°	75°
	●	●	●	●	40	3/8	23/64	2.2	2.8	4.0	4.9	5.7	6.9	8.0	9.8	11.3	12.6	72°	76°	78°
	●	●	●	●	50	3/8	7/16	2.7	3.5	5.0	6.1	7.1	8.5	10.0	12.3	14.2	15.8	74°	79°	82°
	●	●	●	●	60	3/8	33/64	3.3	4.3	6.0	7.3	8.5	10.4	12.0	14.7	17.0	19.0	77°	82°	86°
3/4	●	●	●	●	40	1/2	5/16	2.2	2.8	4.0	4.9	5.7	6.9	8.0	9.8	11.3	12.6	70°	73°	74°
	●	●	●	●	50	1/2	3/8	2.7	3.5	5.0	6.1	7.1	8.5	10.0	12.3	14.2	15.8	72°	75°	77°
	●	●	●	●	60	1/2	7/16	3.3	4.3	6.0	7.3	8.5	10.4	12.0	14.7	17.0	19.0	74°	76°	79°
	●	●	●	●	70	1/2	1/2	3.8	5.0	7.0	8.5	9.9	12.1	14.0	17.1	19.8	22.0	76°	79°	83°
	●	●	●	●	80	1/2	9/16	4.4	5.7	8.0	9.8	11.3	13.8	16.0	19.6	23.0	25.0	78°	82°	84°
	●	●	●	●	90	1/2	37/64	4.9	6.4	9.0	11.0	12.7	15.6	18.0	22.0	25.0	29.0	81°	84°	84°
	●	●	●	●	100	1/2	5/8	5.5	7.1	10.0	12.2	14.1	17.3	20.0	25.0	28.0	32.0	83°	86°	86°
	●	●	●	●	110	1/2	43/64	6.0	7.8	11.0	13.5	15.5	19.0	22.0	27.0	31.0	35.0	85°	88°	88°
	●	●	●	●	120	1/2	23/32	6.6	8.5	12.0	14.7	17.0	21.0	24.0	29.0	34.0	38.0	87°	90°	90°

Standard Materials			
●	●	●	●
●	●	●	●
●	●	●	●
●	●	●	●
●	●	●	

Material Code
no material code = Brass
I = Mild Steel
SS = 303 Stainless Steel
316SS = 316 Stainless Steel
PVC = Polyvinyl Chloride

INTERMEDIATE CAPACITIES—Caps are interchangeable for in-between capacities within each pipe size group... write for Data Sheets 3055, 3986 and 3987.
Spray Dimension Data... write for Data Sheets 15350 and 15362.

DIMENSIONS & WEIGHTS

Based on largest/heaviest version of each type.

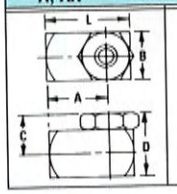

A, AX	A	B	C	D	L	Net Weight oz.
1/8 A, AX	11/16"	5/8"	15/32"	25/32"	1"	1½
1/4 A, AX	7/8"	3/4"	17/32"	29/32"	1¼"	2¾
3/8 A, AX	1 1/32"	7/8"	11/16"	1⅛"	1 15/32"	4¼
1/2 A, AX	1⅜"	1⅛"	27/32"	1 13/32"	1 15/16"	8¾
3/4 A, AX	1 9/16"	1¼"	15/16"	1 9/16"	2 3/16"	11
3/8 A-30.1	31/32"	3/4"	3/4"	1⅛"	1 11/32"	4
3/8 A-50.1	31/32"	3/4"	27/32"	1 7/32"	1 11/32"	3¾
3/8 A-50.3	31/32"	3/4"	11/16"	1 1/16"	1 11/32"	3¾

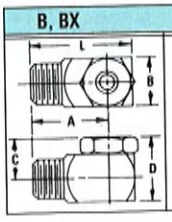

B, BX	A	B	C	D	L	Net Weight oz.
1/8 B, BX	⅞"	5/8"	15/32"	25/32"	1 3/16"	1½
1/4 B, BX	1"	3/4"	17/32"	29/32"	1⅜"	2½
3/8 B, BX	1⅛"	7/8"	11/16"	1⅛"	1 9/16"	4
1/2 B, BX	1⅜"	1⅛"	27/32"	1 13/32"	1 15/16"	7
3/4 B, BX	1 5/8"	1¼"	15/16"	1 9/16"	2¼"	10¾
3/8 B-30.1	1⅛"	3/4"	3/4"	1⅛"	1½"	3¾
3/8 B-50.1	1⅛"	3/4"	27/32"	1 7/32"	1½"	3½
3/8 B-50.3	1⅛"	3/4"	11/16"	1 1/16"	1½"	3½

ORDERING INFORMATION

STANDARD SPRAY NOZZLE

1/4 A - SS 10

- 1/4 — Inlet Connection Pipe Size
- A — Nozzle Type
- SS — Material Code
- 10 — Capacity Size

The location of the sprays at the transfer and surge bin will be both at the incoming point (the headbox) and outgoing end (tail end of conveyor)

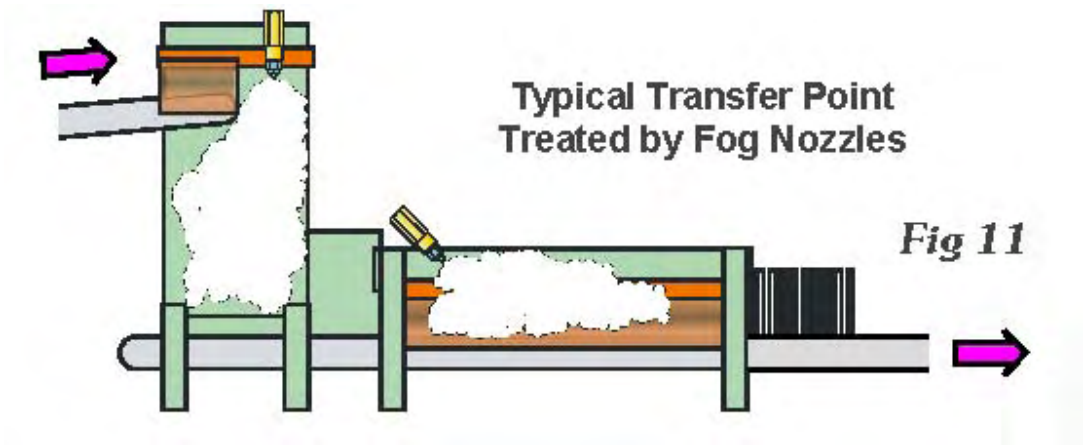

The dumper building will have very fine misting sprays at the outgo and ingo end of the building to act as dust curtain (continuous operation).

There will also be plus wet down nozzles which will operate at conclusion of dumping operation for 20 seconds (to be confirmed after operating experience). They will have relatively large nozzles to provide the volume of water required for this purpose:

APPENDIX B – DESIGN OF THE SETTLING POND

The vertical velocity ie the settling rate of any particle in a liquid is determined by Stokes Law which takes into account:

- particle diameter
- particle specific gravity
- viscosity of the liquid
- specific gravity of the liquid

Coal has low specific gravity (typically 1.4) vs mineral aggregates (typically 2.7). The particle diameter of any coal sample is illustrated by a particle size distribution curve and available information on the Powder River Basin coal to be loaded out indicates a relatively fine particle distribution. The combination of low specific gravity and small particle diameter will result in a low settling velocity and the settlement ponds have to be sized accordingly.

The performance of the primary and secondary settling ponds is not critical as the effluent is to be recycled with only the excess sent off site to the sanitary sewer. However a fair amount of solids will accumulate in them and they need to have enough volume to store these solids without frequent cleaning out. They also need to be wide enough to allow a front end loader access. Preliminary sizing for these ponds is 18 feet wide x 90 ft long x 6 feet deep. A ramp will be provided at one end for front end loader access. Details of construction are to be finalized.

Typical Primary/Secondary Settling Basin under construction

BOM SHOWN FOR ONE ASSEMBLY ONLY(REF-1648-SNORKLE ASSY), TOTAL OF 01 REQUIRED				
ITEM NO.	DESCRIPTION	QTY.	WEIGHT	TOTAL WEIGHT
1	REF-1648-KRS-3036-125 00 00-CHUTE	1	1327.16	1327
2	REF-1648-KRS-3036-125 00 00-SNORKLE	1	1371.64	1372

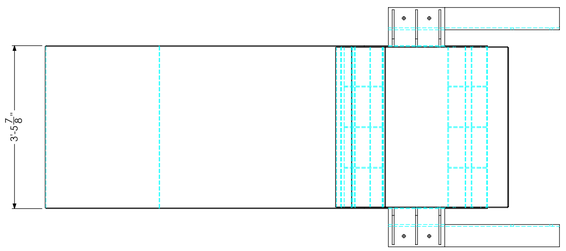

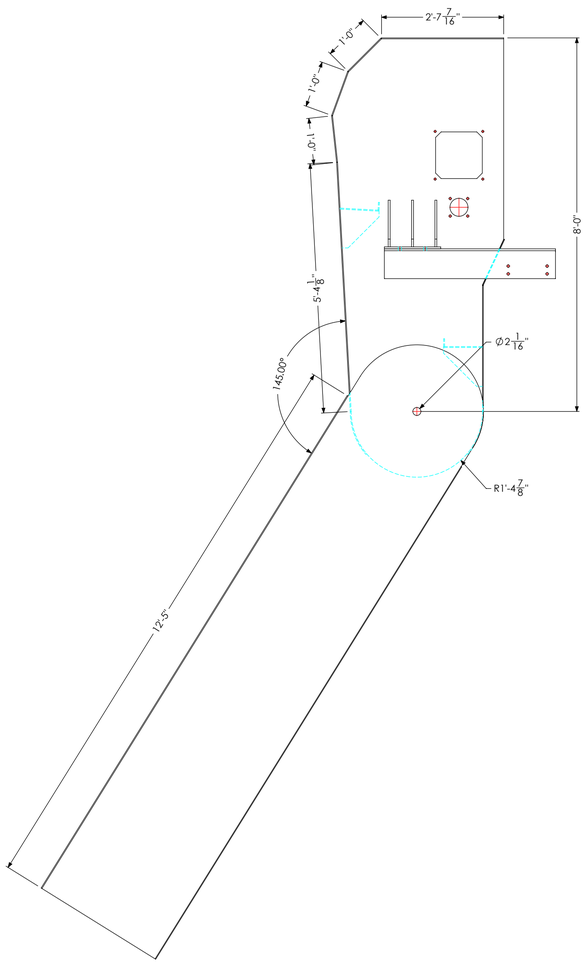

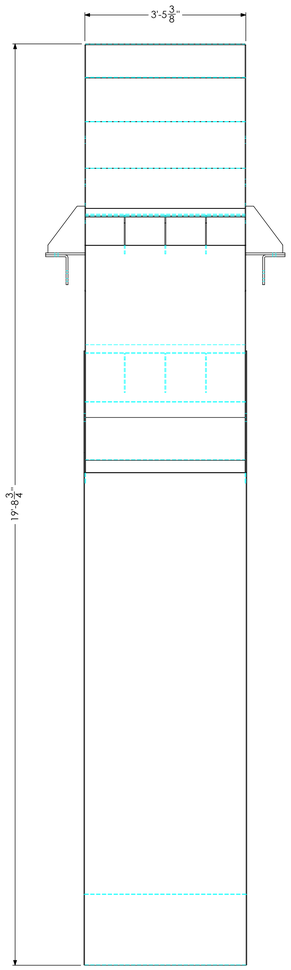

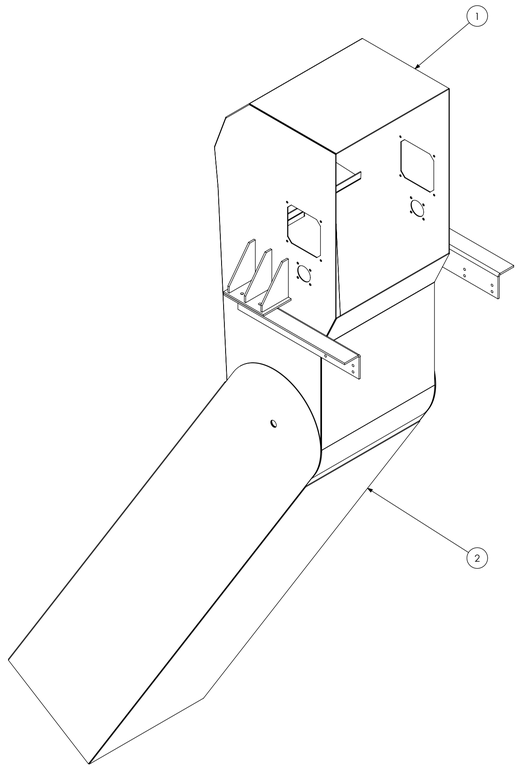

(01 REQ'D) REF-1648-SNORKLE ASSY
MARK MK# ON THE PART

REV.	DESCRIPTION	DATE	REVISED BY	APPROVED BY
A	ISSUED FOR REVIEW AND APPROVAL	02-05-2013	K.G.	

REVISIONS

PAINTING PROCEDURE AND SPECIFICATIONS:

THIRD ANGLE PROJECTION

GENERAL NOTES:
1) KREATOR EQUIPMENT ENGINEERING DEPARTMENT MUST BE NOTIFIED IN WRITING OF ANY CHANGES OR DISCREPANCIES IN DIMENSIONS OR MATERIALS AS DESCRIBED IN THIS DOCUMENT
2) ALL WELDING PROCEDURES WILL CONFORM TO CWB 47.1 DIVISION 1 AND 2
3) ALL WELDS TO BE 3/16" CONTINUOUS FILLET OR BUTT WELDS U.O.S.
4) DIMENSION TOLERANCES UNLESS NOTED: ± 1/16" ON CONNECTION POINTS AND 1/8" ON FABRICATED COMPONENTS
5) DECIMAL DIMENSION TOLERANCES UNLESS NOTED:
(i) PLACE DECIMAL (.00) USE ± 0.025"
(ii) PLACE DECIMAL (.000) USE ± 0.0125"

THIS DRAWING IS THE EXCLUSIVE PROPERTY OF KREATOR EQUIPMENT AND THE DESIGNED PRODUCT OR INFORMATION SHOWN HEREIN MAY NOT BE USED IN WHOLE OR PART WITHOUT EXPRESS PERMISSION OF THE OWNER. ALL RIGHTS RESERVED.

KREATOR EQUIPMENT & SERVICES INC.

EQUIPMENT#: 125 BARGE LOADER
DO NOT SCALE DRAWING
PROJECT: FSD-COAL LOADING SYSTEM
CLIENT: LAFARGE-FSD-GA
TITLE: REF-1648-SNORKLE ASSY

WO#	DWN:	CHK'D:	DRG No.	REV.	SHEET	SIZE
1648	K.G.		REF-1648-SNORKLE ASSY	A	1 OF 1	A1
WEIGHT: 2698.81Lb	SCALE: 1:20	APP'D:				
	DATE: 02-05-2013	DES'D: K.G.				

ISSUED TO:	ISSUED DATE:	COMPLETION DATE:

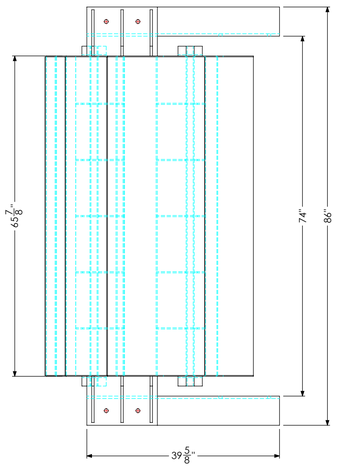

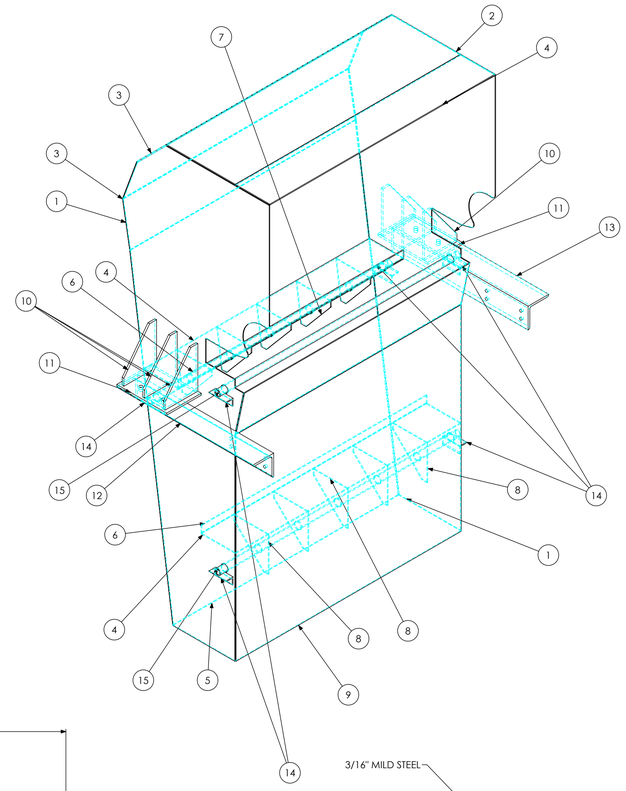

BOM SHOWN FOR ONE ASSEMBLY ONLY(1648-CC1A-CHUTE), TOTAL REQUIRED: 01						
ITEM NO.	DESCRIPTION	ANGLE1	ANGLE2	QTY.	LENGTH	WEIGHT
1	3/16" PLATE - 35 1/16" x 119 3/4"			2		177.67
2	1/4" PLATE - 20" x 65 1/2"			1		92.29
3	1/4" PLATE - 12" x 65 1/2"			3		55.37
4	1/4" PLATE - 10" x 65 1/2"			3		46.14
5	1/4" PLATE - 65 1/2" x 89 1/16"			1		410.92
6	1/4" FLAT - 2" x 65 1/2"			2		9.23
7	1/4" PLATE - 10" x 10"			5		4.16
8	1/4" PLATE - 10" x 10"			5		4.28
9	3/16" PLATE - 65 1/2" x 69"			1		238.79
10	1/2" PLATE - 9 1/2" x 12"			6		10.78
11	1/2" PLATE - 10 1/16" x 14 1/2"			2		20.41
12	L6x6x0.5	0.00	0.00	1	39 5/8"	63.25
13	L6x6x0.5	0.00	0.00	1	39 5/8"	63.25
14	L2x2x0.25	0.00	0.00	6	5"	1.31
15	1 11/16" OD x 1 1/4" ID - SCH 40 PIPE			3		18.45

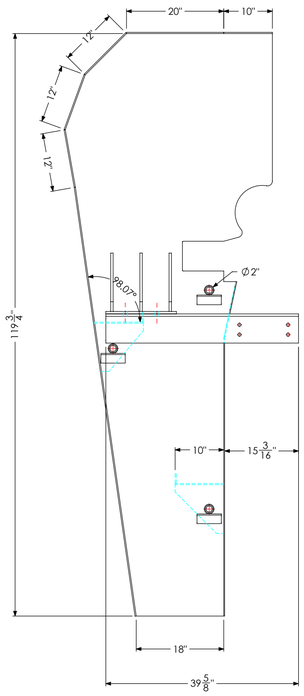

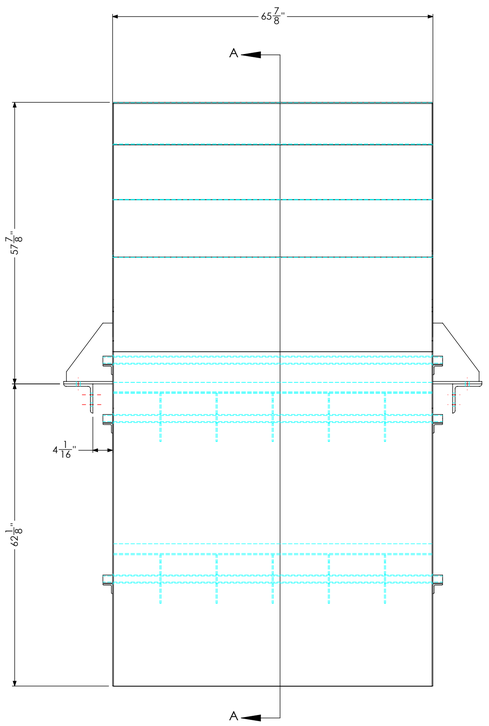

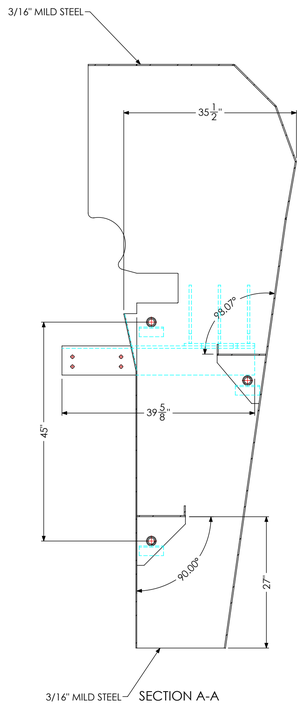

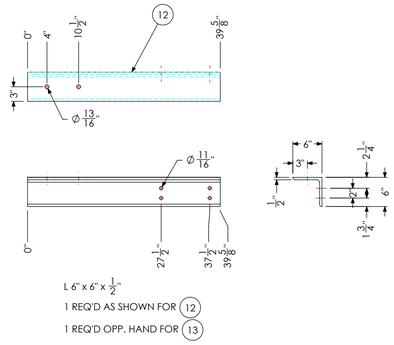

NOTE: THIS IS TYPICAL AT ALL TRANSFER POINTS
THIS IS A CONCEPTUAL DESIGN MAY CHANGE IN FINAL DESIGN

(01 REQ'D) 1648-CC1A-CHUTE
MARK MK# ON THE PART

REV.	DESCRIPTION	DATE	REVISED BY	APPROVED BY
A	ISSUED FOR REVIEW AND APPROVAL	30/04/2013	K.G.	

REVISIONS

PAINTING PROCEDURE AND SPECIFICATIONS:

THIRD ANGLE PROJECTION

GENERAL NOTES:
1) KREATOR EQUIPMENT ENGINEERING DEPARTMENT MUST BE NOTIFIED IN WRITING OF ANY CHANGES OR DISCREPANCIES IN DIMENSIONS OR MATERIALS AS DESCRIBED IN THIS DOCUMENT
2) ALL WELDING PROCEDURES WILL CONFORM TO CWB 47.1 DIVISION 1 AND 2
3) ALL WELDS TO BE 3/16" CONTINUOUS FILLET OR BUTT WELDS U.O.S.
4) DIMENSION TOLERANCES UNLESS NOTED: ± 1/16" ON CONNECTION POINTS AND 1/8" ON FABRICATED COMPONENTS
5) DECIMAL DIMENSION TOLERANCES UNLESS NOTED:
(i) PLACE DECIMAL (.00) USE ± 0.025"
(ii) PLACE DECIMAL (.000) USE ± 0.0125"

THIS DRAWING IS THE EXCLUSIVE PROPERTY OF KREATOR EQUIPMENT AND THE DESIGNED PRODUCT OR INFORMATION SHOWN HEREIN MAY NOT BE USED IN WHOLE OR PART WITHOUT EXPRESS PERMISSION OF THE OWNER. ALL RIGHTS RESERVED.

KREATOR EQUIPMENT & SERVICES INC.

EQUIPMENT#: CC1 — DO NOT SCALE DRAWING

PROJECT: FSD-COAL LOADING SYSTEM

CLIENT: LAFARGE-FSD-BC

TITLE: 1648-CC1A-CHUTE

WO#: 1648	DWN: K.G.	CHK'D:	DRG No.	REV.	SHEET	SIZE
WEIGHT: 1757.78Lb	SCALE: 1:16	APP'D:	1648-CC1A-CHUTE	A	1 OF 2	A1
	DATE: 30/04/2013	DES'D: K.G.				

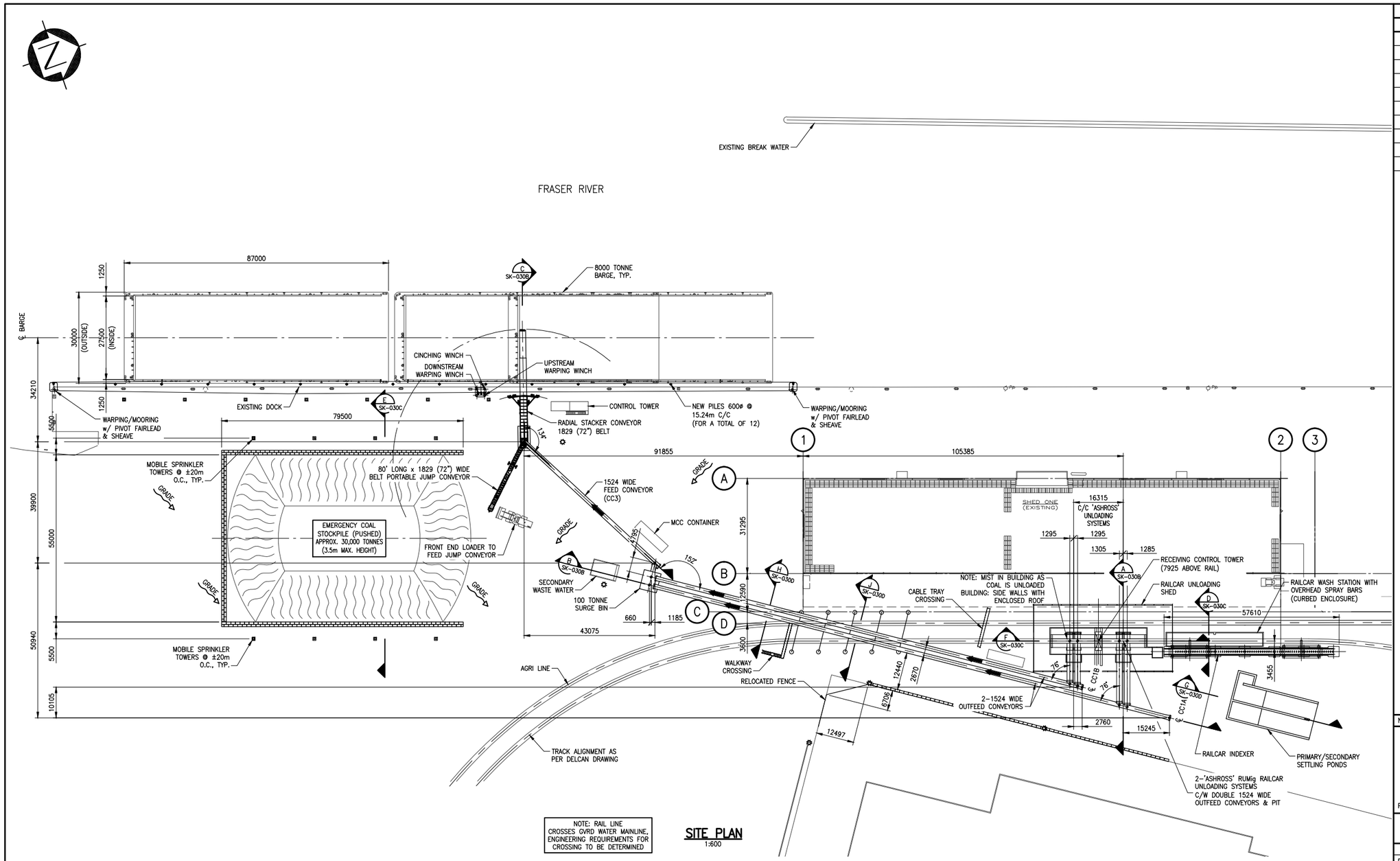

NOTE: RAIL LINE CROSSES GVRD WATER MAINLINE, ENGINEERING REQUIREMENTS FOR CROSSING TO BE DETERMINED

SITE PLAN
1:600

REFERENCE DRAWINGS / DESIGN STANDARDS	
NUMBER	DESCRIPTION

PRELIMINARY
FOR PERMITTING ONLY

No.	Revision	By	D/M/Y

CWA
www.cwaengineers.com
Suite 380-2925 Virtual Way
Vancouver, B.C. Canada
V5M 4X5
Phone: (604) 637-2275
Fax: (604) 637-2276

This drawing has been prepared for the exclusive use of the intended client, and may not be used in whole or in part by any other individual or company.

Project Number:

This drawing has been prepared for the exclusive use of the intended client, and may not be used in whole or in part by any other individual or company.

	Name	Day	Month	Year
Drawn By	JRM/CPL	–	–	–
Design By				
Dwg Check By				
Design Check By				
Approved By				

Scale: 1:600 | Acad File: –

FRASER SURREY DOCKS LP
PACIFIC RIM STEVEDORING
SURREY, B.C.

TEMPORARY COAL BARGE LOADING FACILITY GENERAL ARRANGEMENT

Drawing No. 12022-SK-030A | Rev. P1

Issue	D/M/Y	By	Issued For:	Rev.
A	30/04/13	CPL	PERMIT APPLICATION	Rev. P1

APPENDIX C – ENVIRONMENTAL POLICY

Environmental Policy Template

Environmental Policy Statement

Fraser Surrey Docks is committed to operating in an environmentally responsible manner and for promoting environmental stewardship amongst all of our key stakeholders, including employees, customers, shareholders, suppliers, contractors and the public. We will implement practices and policies that promote Environmental Stewardship and adhere to all environmental compliances. We will strive for continuous improvements of performance through consistent and measureable goals and objectives.

Our commitments are:

- To comply with all relevant environmental regulatory requirements and support through corresponding internal policies
- To prevent air quality impacts by implementing appropriate air emission mitigation strategies and monitoring our performance against pre-established baselines and regulatory target levels
- To prevent pollution and emissions by continually working on process improvements to minimize the generation of hazardous waste and to reduce or prevent the release of regulated substances into the environment
- To foster, establish and maintain an internal environmental awareness culture for our employees and contractors that supports excellence in Environmental Stewardship
- To engage with our customers, suppliers, contractors and shareholders to promote environmental stewardship, to address and reduce the environmental impacts of our products and services along the value chain
- To reach out to the communities in which we operate and promote Environmental Stewardship and awareness
- To establish a process of continual improvements governed by the commitments of this policy and assessed against key performance indicators and corporate targets (SMART)
- To establish and maintain an environmentally conscious Purchasing Policy

Jeff Scott
CEO & President
Fraser Surrey Docks LP
January 1, 2013

APPENDIX D – VISUAL SITE INSPECTION REPORT (EXAMPLE)

VISUAL SITE INSPECTION REPORT (Example)

Date/ Time:
(dd/mm/yy hh:mm) _____ Report #: _____

Project Location: FSD Facility

Inspector:

Weather Conditions (incl. wind dir.):	Surface Moisture Conditions:

Operation Activities Witnessed:

IF THERE IS NOTICABLE DUST INDICATE MITIGATION MEASURES BEING APPLIED OR THOSE RECOMMENDED. PROVIDE PHOTOGRAPHIC DOCUMENTATION WHEN APPROPRIATE

POTENTIAL FUGITIVE DUST SOURCES: (Stockpiles, unpaved roads, excavation, track out, other)

Description:	**Moisture Level** (Wet/Damp/Dry)	**Noticeable Dust?** (Y/N)	**Mitigation Measure Applied?**	**Visual Opacity (%)**	**Comments/ Mitigation Measures Effectiveness/ Recommendations**
Stockpiles					
Material Transfer					
Trucks / Road Dust					
Other					

Notes/ Observations:

LEVELTON CONSULTANTS LTD.

Per: _____
Onsite Inspector

APPENDIX E – MONITORING EQUIPMENT INFORMATION

VRAE

Hand Held 5 Gas Surveyor

VRAE is a hand held 1, 2, 3, 4 or 5 gas monitor with built-in sampling pump and optional data logging.

Sensors include new RAE dual range 0-100% Volume and 0-100% LEL, oxygen and three, smart, interchangeable toxic sensors or up to four smart, interchangeable toxic sensors may be added. The dual range combustible sensor can monitor explosive gases in an oxygen-free environment at percent by volume levels.

The internal pump automatically shuts off plus an alarm is activated, if the remote probe tubing crimps or water is sucked onto the field replaceable filter.

Toxic Sensors Include

- Carbon monoxide
- Hydrogen sulfide
- Sulfur dioxide
- Nitric oxide
- Nitrogen dioxide
- Chlorine
- Ammonia
- Hydrogen cyanide
- Phosphine

Features

- Large, alarm activated back light LCD display
- Visual alarm with flashing
- Large keys usable with gloved hand
- Rigid inlet probe
- 10 hours operation
- Sample collection port
- 16,000 data points download to PC
- Rubber boot

Special Points of Interest:

- Protected from portable radios
- Internal sample draw pump for quick response and remote sampling
- Smart battery charging with status indication and LED indicator
- Snap-in rechargeable NMH or alkaline battery pack
- 48 built-in correction factors for LEL sensor
- 4 toxic sensor version

Applications

- Refineries and petrochemical plants — confined space entry, hot work permits
- Utilities — cable vaults, transformer stations
- Waste water treatment plants — confined space entry
- Marine and off shore oil wells — testing of confined spaces
- Landfill operations — monitoring wells and confined spaces
- Food processing — refrigeration, decomposition, process off gasing, poultry farms
- Fire departments
- Confined Space Entry — trenches, silos, railcars

1339 Moffett Park Drive • Sunnyvale, California 94089 USA
Tel: 408.752.0723 • Fax: 408.752.0724
Email: RaeSales@raesystems.com • www.raesystems.com

Ch010 Rev. 3-2/99

RAE SYSTEMS

Specifications

Intrinsic Safety	UL Class 1, Division I, Group A,B,C,D cUL and EEx ia IiC T4 (Europe) PENDING
Size	8.3" (21 cm) L x 3.0" (7.6 cm) W x 1.9" (4.9 cm) H
Weight	20 oz (568 gm) with battery pack
Detector	Catalytic sensor for combustible gas. Thermal conductivity sensor for percentage volume combustible gas. Electrochemical sensors for oxygen and toxic gases
Battery	Rechargeable, snap-in, field replaceable 4.8V, 1.1Ah NMH battery pack, 4 AA alkaline battery adapter
Operating Hours	10 hours continuous
Battery Charging	10 hours charge through built-in charger or an external battery charger
Display	2 line by 16 digit LCD with LED back light automatically in dim light or alarm condition
Keypads	1 operation and 2 program keys
Direct Readout	Instantaneous (up to 5 values): • Oxygen as percentage by volume • Combustible gas as percentage by volume or percentage of lower explosion limit • Toxic gases as parts per million • High and low values for all gases • STEL, TWA for toxic gases • Battery and shut down voltage
Alarm	90 dB buzzer and flashing red LED to indicate exceeded preset alarms: • High — 3 beeps and flashes per second • Low — 2 beeps and flashes per second • STEL and TWA — 1 beep and flash per second Alarms latching with manual override or automatic reset Additional diagnostic alarm and display message for low battery and pump stall
Calibration	Two points field calibration of zero and span gas
Datalogging	16,000 points (53 hours, 5 channels at one minute intervals) down load to PC with serial number of unit, user ID, site ID and calibration date
Datalogging Interval	1 - 3,600 seconds, programmable
Sampling Pump	Internal pump, flow rate 400 cc/minute Automatic shut off at low flow condition
Temperature	-4°F to 113°F (-20°C to 40°C)
Humidity	0% to 95% relative humidity (non-condensing)

Gas	Nominal Range	Extended Range	Resolution	Response Time (t90)
Combustible	0 - 100% LEL		1%	15 sec
	0 - 100 VOL		1%	20 sec
Oxygen	0 - 30%		0.1%	15 sec
Carbon Monoxide	0 - 500 ppm	1500 ppm	1 ppm	40 sec
Hydrogen Sulfide	0 - 100 ppm	500 ppm	1 ppm	35 sec
Sulfur Dioxide	0 - 20 ppm	150 ppm	0.1 ppm	35 sec
Nitric Oxide	0 - 250 ppm	1000 ppm	1 ppm	30 sec
Nitrogen Dioxide	0 - 30 ppm	150 ppm	0.1 ppm	25 sec
Chlorine	0 - 10 ppm	30 ppm	0.1 ppm	60 sec
Hydrogen Cyanide	0 - 100 ppm	100 ppm	1 ppm	200 sec
Ammonia	0 - 50 ppm	200 ppm	1 ppm	150 sec
Phosphine	0 - 5 ppm	20 ppm	0.1 ppm	60 sec

Ordering Information

VRAE

Models 7800 & 7840

- VRAE unit with combustible, oxygen and up to 3 toxic sensors (7800) OR combustible, and up to 4 toxic sensors (7840)
- Rechargeable NMH battery pack
- AC/DC charging adapter
- Backup Alkaline battery adapter (accept 4 AA size alkaline)
- Inlet probe and water trap filter
- Operation and maintenance manual
- 2 year warranty for LEL / O2 / CO / H2S VRAE monitor

Accessories

- Confined space entry kit
- Calibration kits with gas cylinder, flow regulator and tubing
- ProRAE Suite Software and interface cable
- Automotive charging adapter
- Collapsible remote sampling probe
- Vibration alarm
- Additional sensors — contact the factory for details

ISO 9001 CERTIFIED

DISTRIBUTED BY:

UT20 and UT30

Instrumentation Towers

CAMPBELL SCIENTIFIC
CANADA CORP
11564 - 149 street - edmonton - alberta - T5M 1W7
tel 780.454.2505 fax 780.454.2655
www.campbellsci.ca

The UT20 and UT30 are corrosion-resistant instrument towers that provide sturdy long-term support for Campbell Scientific's sensors, enclosures, and measurement electronics. The UT20 and UT30 have a crossarm measurement height of 20 ft and 30 ft, respectively. The towers include UV-resistant cable ties and require a mounting base (B18 or RFM18) and grounding kit (UTGND). Campbell Scientific recommends guying the towers with our UTGUY Guy Kit.

The towers can be used as an instrument mount in a variety of applications. For meteorological applications, they can be augmented with mounts (e.g., CM204 crossarm) that allow attachment of sensors such as wind sets, pyranometers, and temperature/relative humidity probes. Barometers, soil temperature and moisture probes, and rain gages can also be used with a tower-based station.

For this air quality weather station, a UT30 30-ft tower uses the B18 base and UTGUY kit to secure it to the ground. An environmental enclosure, CM206 crossarm, Wind Monitor, and two 43502 Aspirated Radiation Shields are mounted directly to the tower. A 27106T vertical anemometer is mounted to each end of the crossarm.

Ordering Information (see note 1)

Towers	
UT20	Universal 20 ft Instrument Tower & Adjustable Mast
UT30	Universal 30 ft Instrument Tower & Adjustable Mast

Accessories	
B18	Concrete Mounting Base for UT20 or UT30
RFM16	Flat Roof Mounting Base for UT20 or UT30
UTGUY	Tower Guy Kit (requires either the UTEYE or UTDUK)
UTEYE	Eyebolt Anchors for UTGUY
UTDUK	Duckbill Anchors for UTGUY
UTGND	Tower Grounding Kit

Use the RFM18 to mount the tower on a roof.

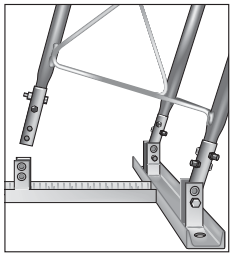

The UTDUK's drive bar is used to drive the duckbill guy anchors in the soil.

The three UTEYE guy anchors embed in concrete.

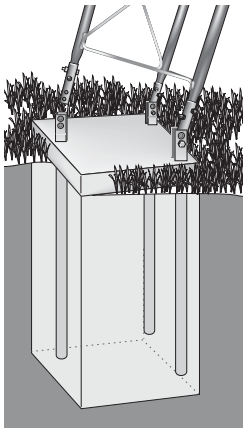

The B18's stakes embed in a concrete pad.

Specifications

	UT20	UT30
Height	20 ft (6 m)	30 ft (10 m)
Shipping Weight	50 lbs (23 kg)	65 lbs (29 kg)
Material	hardened drawn 6063-T832 aluminum	hardened drawn 6063-T832 aluminum
Vertical Pipe Outer Diameter	1 in. (2.5 cm)	1 in. (2.5 cm)
Cross Support Pipe Outer Diameter	0.375 in. (0.953 cm)	0.375 in. (0.953 cm)
Guyed Tower Area Requirements	~11.5 ft radius	~17 ft radius
Required Concrete Pad Dimensions for B18 Concrete Mounting Base (see note 2)	36 L x 36 W x 48 D in. (91 x 91 x 122 cm)	36 L x 36 W x 48 D in. (91 x 91 x 122 cm)
Maximum Wind Load Recommendations (see note 3)	110 mph (B18 base unguyed); 110 mph (RFM18 base w/UTGUY)	110 mph (B18 base unguyed); 110 mph (RFM18 base w/UTGUY)

Notes:

1. Refer to the "Instrumentation Mounts" product brochure for crossarm, solar radiation mounts, and radiation shield options.
2. The concrete pad requirements assume heavy soil; light, shifting, or sandy soils require a bigger concrete pad.
3. The recommended wind load assumes proper installation, proper anchoring, and total instrument projected area of less than two square feet. For the RFM18 base, the wind load recommendation also assumes that the UTGUY's turnbuckles are preloaded just enough to equalize tension and that the tower is guyed at 60 degree angle relative to the ground (maximum). The amount of wind load that these towers can withstand is affected by quality of anchoring and installation, guy wire tension, soil type, guy angle, and the number, type, and location of instruments fastened to the tower.
4. The UT30 is Universal Towers' model #9-30. A more detailed drawing of this tower is available at www.universaltowers.com.

11564 149 Street | Edmonton, AB T5M 1W7 | CAN | phone (780) 454-2505 | www.campbellsci.ca
Australia | Brazil | Canada | England | France | Germany | South Africa | Spain | USA [headquarters]

Copyright © 1997, 2010
Campbell Scientific, Inc.
Printed July 2010

CAMPBELL SCIENTIFIC®
WHEN MEASUREMENTS MATTER

CR1000

measurement & control datalogger

A rugged instrument with research-grade performance.

CR1000 Measurement and Control System

The CR1000 provides precision measurement capabilities in a rugged, battery-operated package. It consists of a measurement and control module and a wiring panel. Standard operating range is -25° to +50°C; an optional extended range of -55° to +85°C is available.

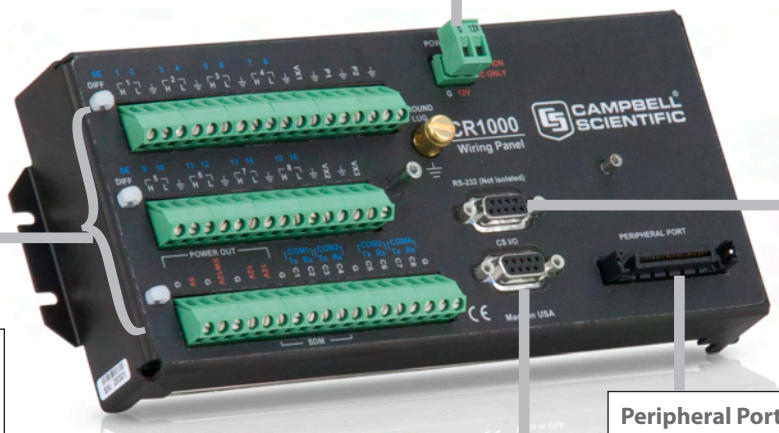

Input/Output Terminals—Individually configured for ratiometric resistive bridge, thermocouple, switch closure, high frequency pulse, low-level ac, serial sensors, and more.

Removable Power Terminal—simplifies connection to external power supply.

RS-232—provides a 9-pin DCE port for connecting a battery-powered laptop, serial sensors or RS-232 modems.

CS I/O Port—connects with AC-powered PCs and communication peripherals such as phone, RF, short-haul, and multidrop modems.

Peripheral Port—allows data to be stored on a CompactFlash card and/or supports Ethernet communications.

Features

- 4 Mbyte memory*
- Program execution rate of up to 100 Hz
- CS I/O and RS-232 serial ports
- 13-bit analog to digital conversions
- 16-bit H8S Renesas Microcontroller with 32-bit internal CPU architecture
- Temperature compensated real-time clock
- Background system calibration for accurate measurements over time and temperature changes
- Single DAC used for excitation and measurements to give ratio metric measurements
- Gas Discharge Tube (GDT) protected inputs
- Data values stored in tables with a time stamp and record number
- Battery-backed SRAM memory and clock ensuring data, programs, and accurate time are maintained while the CR1000 is disconnected from its main power source
- Serial communications with serial sensors and devices supported via I/O port pairs
- PakBus®, Modbus, DNP3, TCP/IP, FTP, and SMTP protocols supported

Measurement and Control Module

The module measures sensors, drives direct communications and telecommunications, reduces data, controls external devices, and stores data and programs in on-board, non-volatile storage. The electronics are RF shielded and glitch protected by the sealed, stainless steel canister. A battery-backed clock assures accurate timekeeping. The module can simultaneously provide measurement and communication functions. The on-board, BASIC-like programming language supports data processing and analysis routines.

Wiring Panel

The CR1000WP is a black, anodized aluminum wiring panel that is compatible with all CR1000 modules. The wiring panel includes switchable 12 V, redistributed analog grounds (dispersed among analog channels rather than grouped), unpluggable terminal block for 12 V connections, gas-tube spark gaps, and 12 V supply on pin 8 to power our COM-series phone modems and other peripherals. The control module easily disconnects from the wiring panel allowing field replacement without rewiring the sensors. A description of the wiring panel's input/output channels follows.

**Originally, the standard CR1000 had 2 MB of data/program storage, and an optional version, the CR1000-4M, had 4 MB of memory. In September 2007, the standard CR1000 started having 4 MB of memory, making the CR1000-4M obsolete. Dataloggers that have a module with a serial number greater than or equal to 11832 will have a 4 MB memory. The 4 MB dataloggers will also have a sticker on the canister stating "4M Memory".*

Analog Inputs
Eight differential (16 single-ended) channels measure voltage levels. Resolution on the most sensitive range is 0.67 µV.

Pulse Counters
Two pulse channels can count pulses from high level (5 V square wave), switch closure, or low level AC signals.

Switched Voltage Excitations
Three outputs provide precision excitation voltages for resistive bridge measurements.

Digital I/O Ports
Eight ports are provided for frequency measurements, digital control, and triggering. Three of these ports can also be used to measure SDM devices. The I/O ports can be paired as transmit and receive. Each pair has 0 to 5 V UART hardware that allows serial communications with serial sensors and devices. An RS-232-to-logic level converter may be required in some cases.

CS I/O Port
AC-powered PCs and many communication peripherals connect with the CR1000 via this port. Connection to an AC-powered PC requires either an SC32B or SC-USB interface. These interfaces isolate the PC's electrical system from the datalogger, thereby protecting against ground loops, normal static discharge, and noise.

RS-232 Port
This non-isolated port is for connecting a battery-powered laptop, serial sensor, or RS-232 modem. Because of ground loop potential on some measurements (e.g., low level single-ended measurements), AC-powered PCs should use the CS I/O port instead of the RS-232 port (see above).

Peripheral Port
One 40-pin port interfaces with the NL115 Ethernet Interface & CompactFlash Module, the NL120 Ethernet Interface, or the CFM100 CompactFlash® Module.

Switched 12 Volt
This terminal provides unregulated 12 V that can be switched on and off under program control.

Storage Capacity
The CR1000 has 2 MB of flash memory for the Operating System, and 4 MB of battery-backed SRAM for CPU usage, program storage, and data storage. Data is stored in a table format. The storage capacity of the CR1000 can be increased by using a CompactFlash card.

Communication Protocols
The CR1000 supports the PakBus, Modbus, DNP3, TCP/IP, FTP, and SMTP communication protocols. With the PakBus protocol, networks have the distributed routing intelligence to continually evaluate links. Continually evaluating links optimizes delivery times and, in the case of delivery failure, allows automatic switch over to a configured backup route.

The Modbus RTU protocol supports both floating point and long formats. The datalogger can act as a slave and/or master.

The DNP3 protocol supports only long data formats. The dataloggers are level 2 slave compliant, with some of the operations found in a level 3 implementation.

The TCP/IP, FTP, and SMTP protocols provide TCP/IP functionality when the CR1000 is used in conjunction with an NL240, NL200, NL115, or NL120. Refer to the CR1000 manual for more information.

Power Supplies
Typically, the CR1000 is powered with a PS200, PS100, or BPALK. The PS200 and PS100 provide a 7-Ah sealed rechargeable battery that should be connected to a charging source (either a wall charger or solar panel). The BPALK consists of eight non-rechargeable D-cell alkaline batteries with a 7.5-Ah rating at 20°C.

Also available are the BP12 and BP24 battery packs, which provide nominal ratings of 12 and 24 Ah, respectively. These batteries should be connected to a regulated charging source (e.g., a CH200 or CH100 connected to a unregulated solar panel or wall charger).

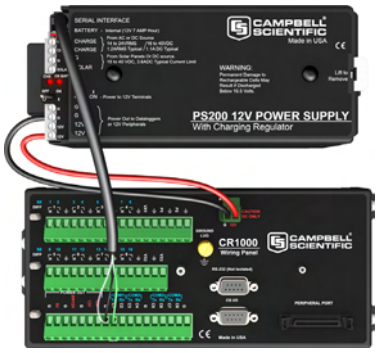

The PS200 (at right) and CH200 are micro-controller-based smart chargers that have two input terminals that allow simultaneous connection of two charging sources.

Enclosure/Stack Bracket
A CR1000 housed in a weather-resistant enclosure can collect data under extremely harsh conditions. The 28960 Enclosure Stack Mounting Kit allows a small peripheral to be placed under the mounting bracket, thus conserving space.

Data Storage and Retrieval Options

To determine the best option for an application, consider the accessibility of the site, availability of services (e.g., cellular phone or satellite coverage), quantity of data to collect, and desired time between data-collection sessions. Some communication options can be combined—increasing the flexibility, convenience, and reliability of the communications.

Keyboard Display

The CR1000KD can be used to program the CR1000, manually initiate data transfer, and display data. The CR1000KD displays 8 lines x 21 characters (64 x 128 pixels) and has a 16-character keyboard. Custom menus are supported allowing customers to set up choices within the datalogger program that can be initiated by a simple toggle or pick list.

One CR1000KD can be carried from station to station in a CR1000 network.

iOS Devices, Android Devices, and PDAs

An iOS device, an Android device, our Archer-PCON Field PC, or a user-supplied PDA can be used to view and collect data, set the clock, and download programs. To use an iOS or Android device, go to the Apple Store or Google Play and purchase our LoggerLink Mobile Apps. User-supplied PDAs require either PConnect or PConnectCE software.

Direct Links

AC-powered PCs connect with the datalogger's CS I/O port via an SC32B or SC-USB interface. These interfaces provide optical isolation. A battery-powered laptop can be attached to the CR1000's RS-232 port via an RS-232 cable—no interface required.

External Data Storage Devices

A CFM100 or NL115 module can store the CR1000's data on an industrial-grade CompactFlash (CF) card. The CR1000 can also store data on an SC115 2-GB Flash Memory Drive.

Mountable Displays

The CD100 and CD295 can be mounted in an enclosure lid. The CD100 has the same functionality and operation as the CD1000KD, allowing both data entry and display without opening the enclosure. The CD295 displays real-time data only.

Short Haul Modems

The SRM-5A RAD Short Haul Modem supports communications between the CR1000 and a PC via a four-wire unconditioned line (two twisted pairs).

Multidrop Interface

The MD485 intelligent RS-485 interface permits a PC to address and communicate with one or more dataloggers over the CABLE2TP two-twisted pair cable. Distances up to 4000 feet are supported.

Internet and IP Networks

Campbell Scientific offers several interfaces that enable the CR1000 to communicate with a PC via TCP/IP.

Radios

Radio frequency (RF) communications are supported via narrowband UHF, narrowband VHF, spread spectrum, or meteor burst radios. Line-of-sight is required for all of our RF options.

Telephone Networks

The CR1000 can communicate with a PC using landlines, cellular CDMA, or cellular GPRS transceivers. A voice synthesized modem enables anyone to call the CR1000 via phone and receive a verbal report of real-time site conditions.

Satellite Transmitters

Our NESDIS-certified GOES satellite transmitter provides one-way communications from a Data Collection Platform (DCP) to a receiving station. Campbell Scientific also offers an Argos transmitter that is ideal for high-latitude applications.

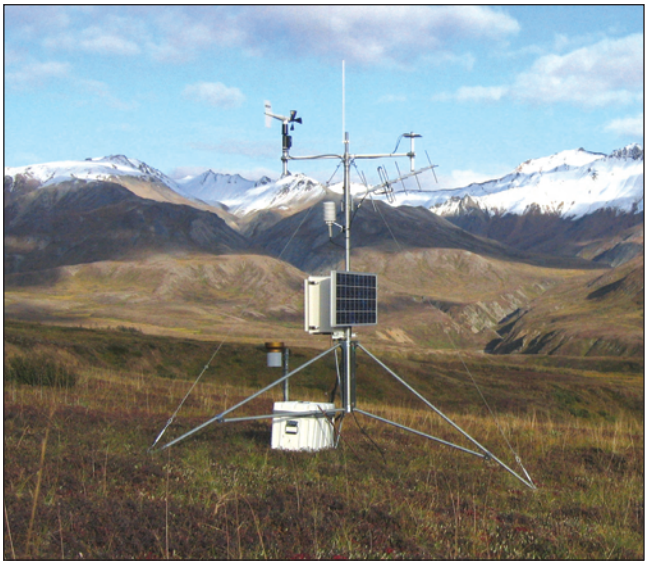

This weather station at Denali National Park, Alaska, transmits data via a GOES satellite transmitter.

Channel Expansion

4-Channel Low Level AC Module

The LLAC4 is a small peripheral device that allows customers to increase the number of available low-level ac inputs by using control ports. This module is often used to measure up to four anemometers, and is especially useful for wind profiling applications.

Synchronous Devices for Measurement (SDMs)

SDMs are addressable peripherals that expand the datalogger's measurement and control capabilities. For example, SDMs are available to add control ports, analog outputs, pulse count channels, interval timers, or even a CANbus interface to the system. Multiple SDMs, in any combination, can be connected to one datalogger.

Multiplexers

Multiplexers increase the number of sensors that can be measured by a CR1000 by sequentially connecting each sensor to the datalogger. Several multiplexers can be controlled by a single CR1000.

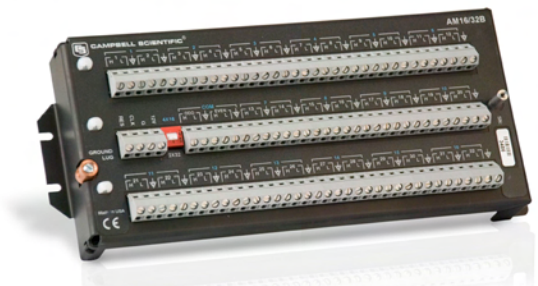

The CR1000 is compatible with the AM16/32B (shown above) and AM25T multiplexers.

Software

Starter Software

Our easy-to-use starter software is intended for first time users or applications that don't require sophisticated communications or datalogger program editing. SCWin Short Cut generates straight-forward CR1000 programs in four easy steps. PC200W allows customers to transfer a program to, or retrieve data from a CR1000 via a direct communications link.

At www.campbellsci.com/downloads you can download starter software at no charge. Our ResourceDVD also provides this software as well as PDF versions of our brochures and manuals.

Datalogger Support Software

Our datalogger support software packages provide more capabilities than our starter software. These software packages contains program editing, communications, and display tools that can support an entire datalogger network.

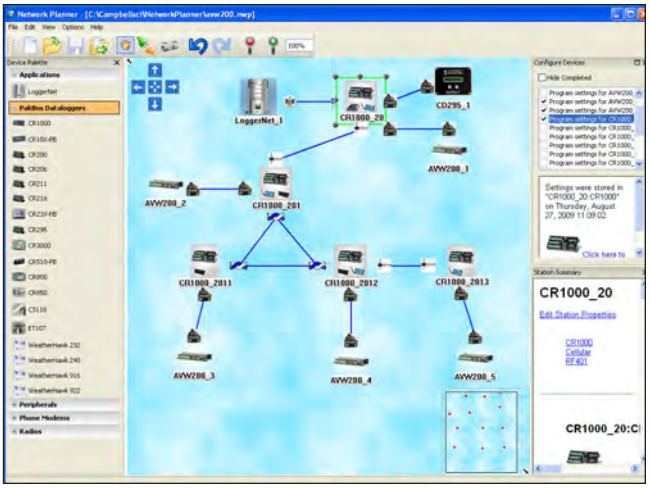

The Network Planner, included in LoggerNet 4 or higher, generates device settings and configures the LoggerNet network map for PakBus networks.

PC400, our mid-level software, supports a variety of telemetry options, manual data collection, and data display. For programming, it includes both Short Cut and the CRBasic program editor. PC400 does not support combined communication options (e.g., phone-to-RF), PakBus® routing, or scheduled data collection.

RTDAQ is an ideal solution for industrial and real-time users desiring to use reliable data collection software over a single telecommunications medium, and who do not rely on scheduled data collection. RTDAQ's strength lies in its ability to handle the display of high speed data.

LoggerNet is Campbell Scientific's full-featured datalogger support software. It is referred to as "full-featured" because it provides a way to accomplish almost all the tasks you'll need to complete when using a datalogger. LoggerNet supports combined communication options (e.g., phone-to-RF) and scheduled data collection.

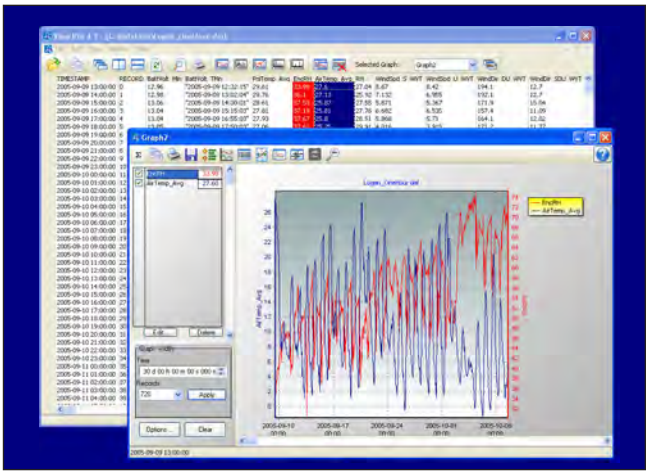

Both LoggerNet and RTDAQ use View Pro to display historical data in a tabular or graphical format.

Applications

The measurement precision, flexibility, long-term reliability, and economical price of the CR1000 make it ideal for scientific, commercial, and industrial applications.

Meteorology

The CR1000 is used in long-term climatological monitoring, meteorological research, and routine weather measurement applications.

Our rugged, reliable weather station measures meteorological conditions at St. Mary's Lake, Glacier National Park, MT.

Sensors the CR1000 can measure include:

- cup, propeller, and sonic anemometers
- tipping bucket rain gages
- wind vanes
- pyranometers
- ultrasonic ranging sensor
- thermistors, RTDs, and thermocouples
- barometric pressure sensors
- RH sensors
- cooled mirror hygrometers

Agriculture and Agricultural Research

The versatility of the CR1000 allows measurement of agricultural processes and equipment in applications such as:

- plant water research
- canopy energy balance
- machinery performance
- plant pathology
- crop management decisions
- food processing/storage
- frost prediction
- irrigation scheduling
- integrated pest management

This vitaculture site in Australia integrates meteorological, soil, and crop measurements.

Wind Profiling

Our data acquisition systems can monitor conditions at wind assessment sites, at producing wind farms, and along transmission lines. The CR1000 makes and records measurements, controls electrical devices, and can function as PLCs or RTUs. Because the datalogger has its own power supply (batteries, solar panels), it can continue to measure and store data and perform control during power outages.

Typical sensors for wind assessment applications include, but are not limited to:

- sonic anemometers
- three-cup and propeller anemometers (up to 10 anemometers can be measured by using two LLAC4 peripherals)
- wind vanes
- temperature sensors
- barometric pressure
- wetness
- solar radiation

Photo courtesy npower renewables

A Campbell Scientific system monitors an offshore wind farm in North Wales.

For turbine performance applications, the CR1000 monitors electrical current, voltage, wattage, stress, and torque.

Soil Moisture

The CR1000 is compatible with the following soil moisture measurement technologies:

- Soil moisture blocks are inexpensive sensors that estimate soil water potential.
- Matric water potential sensors also estimate soil water potential but are more durable than soil moisture blocks.
- Time-Domain Reflectometry Systems (TDR) use a reflectometer controlled by a CR1000 to accurately measure soil water content. Multiplexers allow sequential measurement of a large number of probes by one reflectometer, reducing cost per measurement.
- Self-contained water content reflectometers are sensors that emit and measure a TDR pulse.
- Tensiometers measure the soil pore pressure of irrigated soils and calculate soil moisture.

Air Quality

The CR1000 can monitor and control gas analyzers, particle samplers, and visibility sensors. It can also automatically control calibration sequences and compute conditional averages that exclude invalid data (e.g., data recorded during power failures or calibration intervals).

Road Weather/RWIS

Our fully NTCIP-compliant Environmental Sensor Stations (ESS) are robust, reliable weather stations used for road weather/RWIS applications. A typical ESS includes a tower, CR1000, two road sensors, remote communication hardware, and sensors that measure wind speed and direction, air temperature, humidity, barometric pressure, solar radiation, and precipitation.

Water Resources/Aquaculture

Our CR1000 is well-suited to remote, unattended monitoring of hydrologic conditions. Most hydrologic sensors, including SDI-12 probes, interface directly to the CR1000. Typical hydrologic measurements:

- **Water level** is monitored with incremental shaft encoders, double bubblers, ultrasonic ranging sensors, resistance tapes, strain gage pressure transducers, or vibrating wire pressure transducers. Vibrating wire transducers require an AVW200-series or another vibrating wire interface.
- **Ionic conductivity** measurements use one of the switched excitation ports from the CR1000.
- **Samplers** are controlled by the CR1000 as a function of time, water quality, or water level.
- **Alarm and pump actuation** are controlled through digital I/O ports that operate external relay drivers.

A turbidity sensor was installed in a tributary of the Cedar River watershed to monitor water quality conditions for the city of Seattle, Washington.

Vehicle Testing

This versatile, rugged datalogger is ideally suited for testing cold and hot temperature, high altitude, off-highway, and cross-country performance. The CR1000 is compatible with our SDM-CAN interface and GPS16X-HVS receiver.

Vehicle monitoring includes not only passenger cars, but airplanes, locomotives, helicopters, tractors, buses, heavy trucks, drilling rigs, race cars, and motorcycles.

The CR1000 can measure:

- **Suspension**—strut pressure, spring force, travel, mounting point stress, deflection, ride
- **Fuel system**—line and tank pressure, flow, temperature, injection timing
- **Comfort control**— fan speed, ambient and supply air temperature, refrigerant pressures, solar radiation, ac on and off, time-to-comfort, blower current
- **Brakes**—line pressure, pedal pressure and travel, ABS, line and pad temperature
- **Engine**—pressure, temperature, crank position, RPM, time-to-start, oil pump cavitation
- **General vehicle**—chassis monitoring, road noise, vehicle position and speed, steering, air bag, hot/cold soaks, wind tunnels, traction, CANbus, wiper speed and current, vehicle electrical loads

Other Applications

- Eddy covariance systems
- Wireless sensor/datalogger networks
- Mesonet systems
- Avalanche forecasting, snow science, polar, high altitude
- Fire weather
- Geotechnical
- Historic preservation

CR1000 Specifications

Electrical specifications are valid over a -25° to +50°C, non-condensing environment, unless otherwise specified. Recalibration recommended every two years. Critical specifications and system configuration should be confirmed with Campbell Scientific before purchase.

PROGRAM EXECUTION RATE

10 ms to one day @ 10 ms increments

ANALOG INPUTS (SE1-SE16 or DIFF1-DIFF8)

8 differential (DF) or 16 single-ended (SE) individually configured. Channel expansion provided by multiplexers.

RANGES and RESOLUTION: Basic resolution (Basic Res) is the A/D resolution of a single conversion. Resolution of DF measurements with input reversal is half the Basic Res.

Range (mV)[1]	*DF Res (µV)*[2]	*Basic Res (µV)*
±5000	667	1333
±2500	333	667
±250	33.3	66.7
±25	3.33	6.7
±7.5	1.0	2.0
±2.5	0.33	0.67

[1]Range overhead of ~9% on all ranges guarantees that full-scale values will not cause over range.
[2]Resolution of DF measurements with input reversal.

ACCURACY[3]:
±(0.06% of reading + offset), 0° to 40°C
±(0.12% of reading + offset), -25° to 50°C
±(0.18% of reading + offset), -55° to 85°C (-XT only)

[3]Accuracy does not include the sensor and measurement noise. Offsets are defined as:
Offset for DF w/input reversal = 1.5·Basic Res + 1.0 µV
Offset for DF w/o input reversal = 3·Basic Res + 2.0 µV
Offset for SE = 3·Basic Res + 3.0 µV

ANALOG MEASUREMENT SPEED:

Integration Type/ Code	*Integration Time*	*Settling Time*	*Total Time*[5]	
			SE w/ No Rev	*DF w/ Input Rev*
250	250 µs	450 µs	~1 ms	~12 ms
60 Hz[4]	16.67 ms	3 ms	~20 ms	~40 ms
50 Hz[4]	20.00 ms	3 ms	~25 ms	~50 ms

[4]AC line noise filter.
[5]Includes 250 µs for conversion to engineering units.

INPUT NOISE VOLTAGE: For DF measurements with input reversal on ±2.5 mV input range; digital resolution dominates for higher ranges.
250 µs Integration: 0.34 µV RMS
50/60 Hz Integration: 0.19 µV RMS

INPUT LIMITS: ±5 Vdc

DC COMMON MODE REJECTION: >100 dB

NORMAL MODE REJECTION: 70 dB @ 60 Hz when using 60 Hz rejection

SUSTAINED INPUT VOLTAGE W/O DAMAGE: ±16 Vdc max.

INPUT CURRENT: ±1 nA typical, ±6 nA max. @ 50°C; ±90 nA @ 85°C

INPUT RESISTANCE: 20 Gohms typical

ACCURACY OF BUILT-IN REFERENCE JUNCTION THERMISTOR (for thermocouple measurements):
±0.3°C, -25° to 50°C
±0.8°C, -55° to 85°C (-XT only)

ANALOG OUTPUTS (Vx1-Vx3)

3 switched voltage, sequentially active only during measurement.

RANGE AND RESOLUTION: Voltage outputs programmable between ±2.5 V with 0.67 mV resolution.

V_x ACCURACY: ±(0.06% of setting + 0.8 mV), 0° to 40°C
±(0.12% of setting + 0.8 mV), -25° to 50°C
±(0.18% of setting + 0.8 mV), -55° to 85°C (-XT only)

V_x FREQUENCY SWEEP FUNCTION: Switched outputs provide a programmable swept frequency, 0 to 2500 mv square waves for exciting vibrating wire transducers.

CURRENT SOURCING/SINKING: ±25 mA

RESISTANCE MEASUREMENTS

MEASUREMENT TYPES: Ratiometric measurements of 4- and 6-wire full bridges, and 2-, 3-, and 4-wire half bridges. Precise, dual polarity excitation for voltage excitations eliminates dc errors. Offset values are reduced by a factor of two when excitation reversal is used.

VOLTAGE RATIO ACCURACY[6]: Assuming excitation voltage of at least 1000 mV, not including bridge resistor error.

±(0.04% of voltage reading + offset)/V_x

[6]Accuracy does not include the sensor and measurement noise. The offsets are defined as:
Offset for DF w/input reversal = 1.5·Basic Res + 1.0 µV
Offset for DF w/o input reversal = 3·Basic Res + 2.0 µV
Offset for SE = 3·Basic Res + 3.0 µV

PERIOD AVERAGE

Any of the 16 SE analog inputs can be used for period averaging. Accuracy is ±(0.01% of reading + resolution), where resolution is 136 ns divided by the specified number of cycles to be measured.

INPUT AMPLITUDE AND FREQUENCY:

Voltage Gain	*Input Range (±mV)*	*Signal (peak to peak)*[7]		*Min Pulse Width (µV)*	*Max*[8] *Freq (kHz)*
		Min. (mV)	*Max (V)*		
1	250	500	10	2.5	200
10	25	10	2	10	50
33	7.5	5	2	62	8
100	2.5	2	2	100	5

[7]With signal centered at the datalogger ground.
[8]The maximum frequency = 1/(twice minimum pulse width) for 50% of duty cycle signals.

PULSE COUNTERS (P1-P2)

2 inputs individually selectable for switch closure, high frequency pulse, or low-level ac. Independent 24-bit counters for each input.

MAXIMUM COUNTS PER SCAN: 16.7×10^6

SWITCH CLOSURE MODE:
Minimum Switch Closed Time: 5 ms
Minimum Switch Open Time: 6 ms
Max. Bounce Time: 1 ms open w/o being counted

HIGH-FREQUENCY PULSE MODE:
Maximum Input Frequency: 250 kHz
Maximum Input Voltage: ±20 V
Voltage Thresholds: Count upon transition from below 0.9 V to above 2.2 V after input filter with 1.2 µs time constant.

LOW-LEVEL AC MODE: Internal AC coupling removes AC offsets up to ±0.5 Vdc.
Input Hysteresis: 12 mV RMS @ 1 Hz
Maximum ac Input Voltage: ±20 V
Minimum ac Input Voltage:

Sine Wave (mV RMS)	*Range(Hz)*
20	1.0 to 20
200	0.5 to 200
2000	0.3 to 10,000
5000	0.3 to 20,000

DIGITAL I/O PORTS (C1-C8)

8 ports software selectable, as binary inputs or control outputs. Provide edge timing, subroutine interrupts/wake up, switch closure pulse counting, high frequency pulse counting, asynchronous communications (UARTs), SDI-12 communications, and SDM communications.

HIGH-FREQUENCY MAX: 400 kHz

SWITCH CLOSURE FREQUENCY MAX: 150 Hz

EDGE TIMING RESOLUTION: 540 ns

OUTPUT VOLTAGES (no load): high 5.0 V ±0.1 V; low <0.1

OUTPUT RESISTANCE: 330 ohms

INPUT STATE: high 3.8 to 16 V; low -8.0 to 1.2 V

INPUT HYSTERESIS: 1.4 V

INPUT RESISTANCE: 100 kohm with inputs <6.2 Vdc
220 ohm with inputs ≥6.2 Vdc

SERIAL DEVICE/RS-232 SUPPORT: 0 TO 5 Vdc UART

SWITCHED 12 VDC (SW-12)

1 independent 12 Vdc unregulated source is switched on and off under program control. Thermal fuse hold current = 900 mA @ 20°C, 650 mA @ 50°C, 360 mA @ 85°C.

CE COMPLIANCE

STANDARD(S) TO WHICH CONFORMITY IS DECLARED: IEC61326:2002

COMMUNICATIONS

RS-232 PORTS:
9-pin: DCE (not electrically isolated) for battery-powered computer or non-CSI modem connection.
COM1 to COM4: Four independent Tx/Rx pairs on control ports (non-isolated); 0 to 5 Vdc UART
Baud Rates: selectable from 300 bps to 115.2 kbps.
Default Format: 8 data bits; 1 stop bits; no parity
Optional Formats: 7 data bits; 2 stop bits; odd, even parity

CS I/O PORT: Interface with CSI telecommunication peripherals

SDI-12: Digital control ports 1, 3, 5, and 7 are individually configured and meet SDI-12 Standard version 1.3 for datalogger mode. Up to ten SDI-12 sensors are supported per port.

PERIPHERAL PORT: 40-pin interface for attaching CompactFlash or Ethernet peripherals

PROTOCOLS SUPPORTED: PakBus, Modbus, DNP3, FTP, HTTP, XML, POP3, SMTP, Telnet, NTCIP, NTP, SDI-12, SDM

SYSTEM

PROCESSOR: Renesas H8S 2322 (16-bit CPU with 32-bit internal core RUNNING AT 7.3 MHz)

MEMORY: 2 MB of Flash for operating system; 4 MB of battery-backed SRAM for CPU usage, program storage and final data storage.

RTC CLOCK ACCURACY: ±3 min. per year. Correction via GPS optional.

RTC CLOCK RESOLUTION: 10 ms

SYSTEM POWER REQUIREMENTS

VOLTAGE: 9.6 to 16 Vdc

EXTERNAL BATTERIES: 12 Vdc nominal (power connection is reverse polarity protected)

INTERNAL BATTERIES: 1200 mAh lithium battery for clock and SRAM backup that typically provides three years of backup

TYPICAL CURRENT DRAIN:
Sleep Mode: ~0.6 mA (0.9 mA max.)
1 Hz Sample Rate (1 fast SE meas.): 1 mA
100 Hz Sample Rate (1 fast SE meas.): 16.2 mA
100 Hz Sample Rate (1 fast SE meas. w/RS-232 communication): 27.6 mA
Optional Keyboard Display On (no backlight): add 7 mA to current drain
Optional Keyboard Display On (backlight on): add 100 mA to current drain

PHYSICAL

DIMENSIONS: 23.9 x 10.2 x 6.1 cm (9.4 x 4 x 2.4 in.); additional clearance required for cables and leads.

WEIGHT (datalogger + base): 1 kg (2.1 lb)

WARRANTY

3 years against defects in materials and workmanship.

Copyright © 2004, 2012
Campbell Scientific, Inc.
Printed October 2012

Wind Speed and Direction Sensors

05103 Wind Monitor, 05106 Wind Monitor-MA, 05305 Wind Monitor-AQ

RM Young's Wind Monitors are light-weight instruments that measure wind speed and direction. Their design emphasizes simplicity and lightweight construction. The Wind Monitors are made out of rigid UV-stabilized thermoplastic with stainless steel and anodized aluminum fittings. The thermoplastic material resists corrosion from sea air environments and atmospheric pollutants. The Wind Monitors use stainless steel precision-grade ball bearings for the propeller shaft and vertical shaft bearings. Cabled for use with our dataloggers, the Wind Monitors are compatible with all of our contemporary dataloggers and many of our retired dataloggers (e.g., 21X, CR23X).

Wind Speed

The wind speed sensor for all the Wind Monitors is a helicoid-shaped, four-blade propeller. Rotation of the propeller produces an ac sine wave that has a frequency directly proportional to wind speed. The ac signal is induced in a transducer coil by a six-pole magnet mounted on the propeller shaft. The coil resides on the non-rotating central portion of the main mounting assembly, eliminating the need for slip rings and brushes.

Wind Direction

All of the Wind Monitors use a potentiometer to measure wind direction. The datalogger applies a known precision excitation voltage to the potentiometer element. The output signal is an analog voltage directly proportional to the azimuth angle.

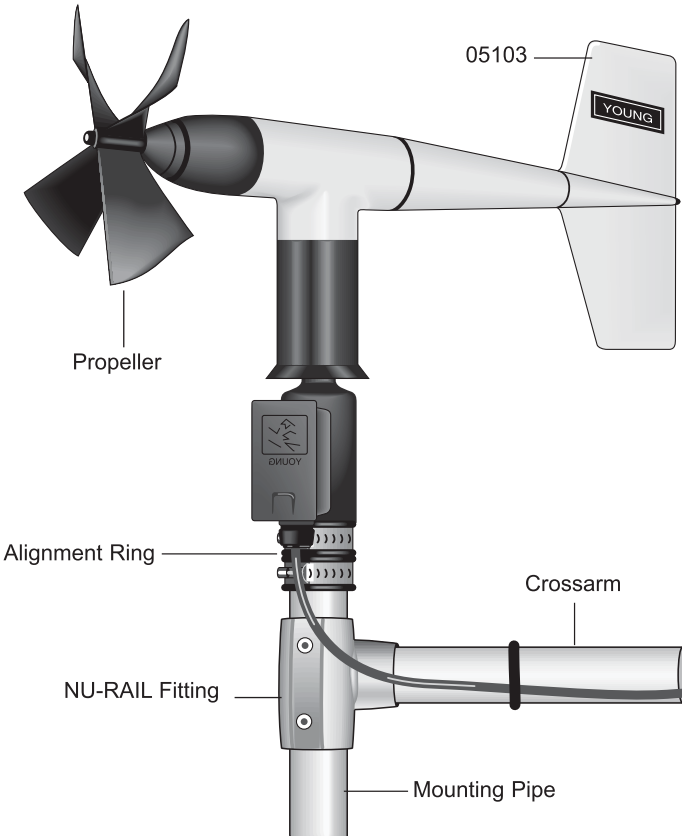

This 05103 Wind Monitor is attached to a crossarm via a 17953 NU-RAIL fitting and a mounting pipe (shipped with the sensor).

Model Descriptions

05103 Wind Monitor

The 05103 Wind Monitor is a sturdy instrument for measuring wind speed and direction in harsh environments. Its simplicity and corrosion-resistant construction make it ideal for a wide range of wind measuring applications.

05106 Wind Monitor-MA

The 05106 Wind Monitor-MA is a robust instrument designed for offshore and marine applications. It features waterproof bearing lubricant and a sealed, heavy-duty cable pigtail instead of the standard junction box.

Model Descriptions (continued)

05305 Wind Monitor-AQ

The 05305 Wind Monitor-AQ is a high performance wind speed and direction sensor designed specifically for air quality measurements. It provides a lower starting threshold, faster response, and higher accuracy than the other wind monitors. However, to achieve the superior performance, the 05305 is less ruggedly constructed. The Wind Monitor-AQ meets or exceeds the requirements published by the following regulatory agencies:

- U.S. Environmental Protection Agency—Ambient Monitoring Guidelines for Prevention of Significant Deterioration (PSD) and On-Site Meteorological Instrumentation Requirements to Characterize Diffusion from Point Sources
- U.S. Nuclear Regulatory Agency—NRC Regulatory Guide 1.23 Meteorological Programs in Support of Nuclear Power Plants
- American Nuclear Society—Standard for Determining Meteorological Information at Nuclear Power Plants

The 05305 Wind Monitor-AQ provides high accuracy measurements, typically for air quality applications.

Mounting

The Wind Monitors can be attached to a CM202, CM204, or CM206 crossarm via a NU-RAIL fitting or CM220 Right Angle Mounting Bracket. Alternately, the Wind Monitors can be attached to the top of our stainless-steel tripods via the CM216 Sensor Mounting Kit.

Wind Profile Studies

Wind profile studies measure many wind sensors. For these applications, the LLAC4 4-Channel Low Level AC Conversion Module can be used to increase the number of Wind Monitors measured by one datalogger. The LLAC4 allows datalogger control ports to read the wind speed sensor's ac signals instead of using pulse channels. Dataloggers compatible with the LLAC4 are the CR200-series (ac signal ≤1 kHz only), CR800, CR850, CR1000, CR3000, and CR5000.

The LLAC4 is often used to measure up to four Wind Monitors, and is especially useful for wind profiling applications.

Ordering Information

Wind Monitors

05103-L_	Wind Monitor with user-specified lead length. Specify the lead length, in feet, after the L. For example, 05103-L13 order a 13 ft lead length.
05106-L_	Wind Monitor-MA for marine applications with user-specified lead length. Specify the lead length, in feet, after the L. For example, 05106-MA-L13 order a 13 ft lead length.
05305-L_	Wind Monitor-AQ for air quality applications with user-specified lead length. Specify the lead length, in feet, after the L. For example, 05305-L13 order a 13 ft lead length.

Mounts

17953	1" x 1" NU-RAIL Fitting for attaching the Wind Monitor to a crossarm, such as a CM202, CM204, or CM206 crossarm.
CM220	Right Angle Mounting Bracket for attaching the Wind Monitor to a crossarm, such as a CM202, CM204, or CM206.
CM216	Sensor Mounting Kit for attaching sensor to atop a CM110, CM115, or CM120 stainless-steel tripod.

An innovative method of discouraging interference from birds is shown in this photo of a wind measurement station at St. Peter and St. Paul Rocks (Brazil). The station was located in the mid-Atlantic during the SEQUAL (Seasonal Equatorial Atlantic Experiment) field program. Photo courtesy Dr. Silvia L. Garzoli (Director of the Physical Oceanography Division of the Atlantic Oceanographic and Meteorological Laboratory of NOAA).

Wind Profile Accessory

LLAC4	4-Channel Low-Level AC Conversion Module

Recommended Lead Lengths

These lead lengths assume the sensor is mounted atop the tripod/tower via a CM202 crossarm.

CM6	CM10	CM110	CM115	CM120	UT10	UT20	UT30
10'	13'	13'	19'	24'	13'	24'	34'

	05103 ***05103-10***	***05106*** ***05106-10*** ***05106C*** ***05106C-10***	***05305*** ***05305-10***
Wind Speed			
Range:	0-100 m/s (0-224 mph)	0-100 m/s (0-224 mph)	0-50 m/s (0-112 mph)
Accuracy:	±0.3 m/s (±0.6 mph)	±0.3 m/s (±0.6 mph)	±0.2 m/s (±0.4 mph)
Starting Threshold:	1.0 m/s (2.2 mph)	1.1 m/s (2.4 mph)	0.4 m/s (0.9 mph)
Distant Constant (63% Recovery):	2.7 m (8.9 ft)	2.7 m (8.9 ft)	2.1 m (6.9 ft)
Output:	A/C Voltage (3 pulses per revolution) 1800 RPM 90 Hz = 8.8 m/s (19.7 mph)	A/C Voltage (3 pulses per revolution) 1800 RPM 90 Hz = 8.8 m/s (19.7 mph)	A/C Voltage (3 pulses per revolution) 1800 RPM 90 Hz = 9.2 m/s (20.6 mph)
Wind Direction			
Range:	0-360° Mechanical, 0-355° Electrical (5° Open)	0-360° Mechanical, 0-355° Electrical (5° Open)	0-360° Mechanical, 0-355° Electrical (5° Open)
Accuracy:	±3°	±3°	±3°
Starting Threshold at 10° Displacement:	1.1 m/s (2.2 mph)	1.1 m/s (2.2 mph)	0.5 m/s (1.0 mph)
Delay Distance (50% Recovery):	1.3m (4.3 ft)	1.3m (4.3 ft)	1.2m (3.9 ft)
Damping Ratio:	0.25	0.25	0.45
Damped Natural Wavelength:	7.2m (23.6 ft)	7.2m (23.6 ft)	4.4m (14.4 ft)
Output:	Analog D/C Voltage from 10kohm Potentiometer	Analog D/C Voltage from 10kohm Potentiometer	Analog D/C Voltage from 10kohm Potentiometer
Power	Switched Excitation supplied by the Datalogger	Switched Excitation supplied by the Datalogger	Switched Excitation supplied by the Datalogger

	05103 *05103-10*	*05106* *05106-10* *05106C* *05106C-10*	*05305* *05305-10*
Operating Temperature	-50°C to 50°C, assuming non-riming conditions	-50°C to 50°C, assuming non-riming conditions	-50°C to 50°C, assuming non-riming conditions
Dimensions			
Overall:	37 cm H by 55 cm L (14.6 " H by 21.7 " L)	37 cm H by 55 cm L (14.6 " H by 21.7 " L)	38 cm H by 65 cm L (15.0 " H by 25.6 " L)
Main Housing Diameter:	5 cm (2.0 ")	5 cm (2.0 ")	5 cm (2.0 ")
Propeller Diameter:	18 cm (7.1 ")	18 cm (7.1 ")	20 cm (7.9 ")
Mounting Pipe:	34 mm (1.34 ") OD; Standard 1.0 " IPS Schedule 40	34 mm (1.34 ") OD; Standard 1.0 " IPS Schedule 40	34 mm (1.34 ") OD; Standard 1.0 " IPS Schedule 40
Weight			
Sensor:	1.5 kg (3.2 lbs)	1.5 kg (3.2 lbs)	1.1 kg (2.5 lbs)
Shipping (Approximate):	2.3 kg (5.5 lbs)	2.3 kg (5.5 lbs)	2.3 kg (5.5 lbs)
Cable	Supplied by CSC Standard Length 3.3m (10 ft) Custom Lengths Available	Supplied by RMY / CSC Standard Length 3.3m* (10 ft) Custom Lengths Available * 05106C Standard Length 1m (3.3 ft) + Custom Length (with Connectors)	Supplied by CSC Standard Length 3.3m (10 ft) Custom Lengths Available

copyright 1991, 2007
Campbell Scientific, Inc.
Printed March 2007

HC2-S3-L

Temperature & Relative Humidity Probe

The HC2-S3-L, manufactured by Rotronic Instrument Corp., measures air temperature with a Pt100 IEC751 1/3 class B and measures relative humidity (RH) based on the HygroClip2 technology. Each HygroClip2 probe is 100% interchangable and can be swapped in seconds without any loss of accuracy, eliminating the downtime typically required for the recalibration process.

Sensor Mounts

When exposed to sunlight, the HC2-S3-L must be housed in a 41003-X or 43502 radiation shield. To attach the 41003-X to a CM202, CM204, or CM206 crossarm, place the 41003-X 's u-bolt in the bottom holes. To attach the radiation shield directly to a tripod mast, tower mast, or tower leg, place the u-bolt in the side holes.

Ordering Information

HC2-S3-L	Temperature and RH Probe with 6 ft. lead length
41003-X	10-Plate Gill Radiation Shield
43502	Motorized aspirated radiation shield
R41046DS-15	Adaptor

Specifications

Relative Humidity

Operating range:	0 to 100% RH
Accuracy @23°C:	±0.8% RH
Output:	0 - 1 VDC
Typical Long- Term Stability:	Better than ±1% RH per year

Temperature

Measurement Range:	-40° to +60°C or -50° to +50°C: ±0.1°C (@0°C)
Temperature Accuracy:	-50° to +60°C: ±0.4°C (worst case)
Output:	0 - 1 VDC

General

Supply Voltage:	5 to 24 VDC (typically powered by datalogger's 12 VDC supply)
Current Consumption:	< 4 mA
Diameter:	0.59" (15.00 mm)
Length:	6.6" (168 mm)
Housing Material:	Polycarbonate

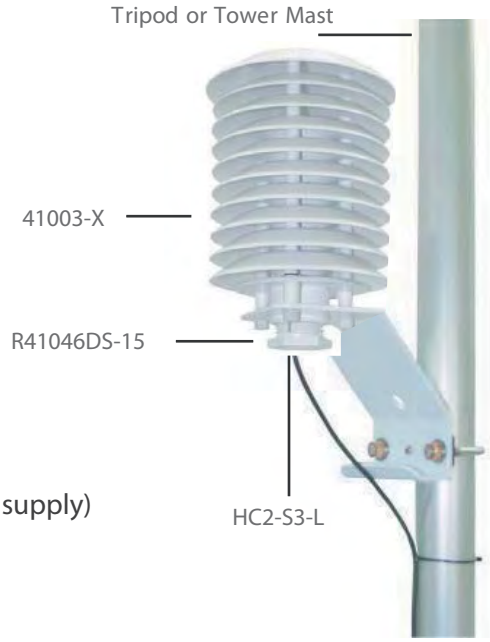

Rain Gauges

Models TE525WS, TE525, TE525M

The TE525 series tipping bucket rain gauges are manufactured by Texas Electronics. Both the TE525WS and TE525 measure in 0.01 inch increments; the TE525M measures in 0.1 mm increments. These gauges funnel precipitation into a bucket mechanism that tips when filled to a calibrated level. A magnet attached to the tipping mechanism actuates a switch as the bucket tips. The momentary switch closure is counted by the pulse-counting circuitry of Campbell Scientific dataloggers.

The TE525WS and TE525 are compatible with Campbell Scientific's CS705 Snowfall Conversion Adapter which allows you to measure the water content of snow. The TE525 requires a recalibration when the CS705 is added or removed; the TE525WS does not. The TE525M is not compatible with the CS705. For more information about the CS705, refer to the CS705 product literature.

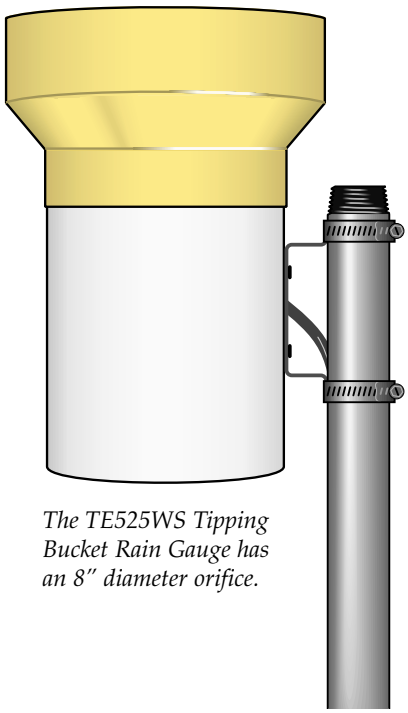

The TE525WS Tipping Bucket Rain Gauge has an 8″ diameter orifice.

Mounting

The gauge mounts to a user-supplied threaded pole. Accurate measurements require the gauges to be level.

Ordering Information

TE525WS-L__	8-inch diameter; 0.01 inch tips; user-specified lead length.* Enter lead length (in feet) after L.
TE525-L__	6-inch diameter; 0.01 inch tips; user-specified lead length.* Enter lead length (in feet) after L.
TE525M-L__	24.5 cm diameter; 0.1 mm tips; user-specified lead length.* Enter lead length (in feet) after L.

To measure frozen precipitation with the TE525WS please consider the CS705 Snowfall Conversion Adapter.

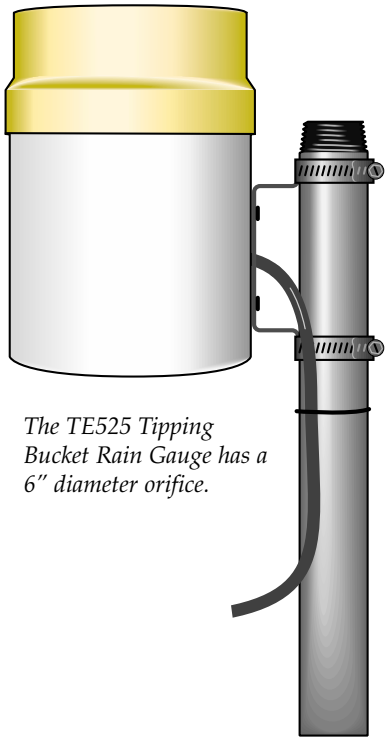

The TE525 Tipping Bucket Rain Gauge has a 6″ diameter orifice.

**A 25′ lead length is recommended for most applications, e.g. TE525WS-L25.*

CAMPBELL SCIENTIFIC
CANADA CORP.
11564 - 149 street - edmonton - alberta - T5M 1W7
tel 780.454.2505 fax 780.454.2655
www.campbellsci.ca

Specifications

Sensor type: Tipping bucket/magnetic reed switch

Material: Anodized aluminum

Temperature: 0° to +50°C

Resolution: 1 tip

Cable: 2-conductor shielded cable

	TE525WS	TE525	TE525M	
Rainfall per tip:	0.01″ (0.254 mm)	0.01" (0.254 mm)	0.004″ (0.1 mm)	
Orifice diameter:	8″ (20.3 cm)	6.06" (15.4 cm)	9.66" (24.5 cm)	
Height:	10.5″ (26.7 cm)	9.5" (24.1 cm)	11.5" (29.21 cm)	
Weight:	2.5 lbs. (1.1 kg)	2.5 lbs. (1.1 kg)	2.7 lbs. (1.2 kg)	
Accuracy:				
Up to 1 inch/hr:	±1%	±1%	Up to 10 mm/hr:	±1%
1 to 2 inch/hr:	+0, -2.5%	+0, -3%	10 to 20 mm/hr:	+0, -3%
2 to 3 inch/hr:	+0, -3.5%	+0, -5%	20 to 30 mm/hr:	+0, -5%

CAMPBELL SCIENTIFIC
CANADA CORP.
11564 - 149 street - edmonton - alberta - T5M 1W7
tel 780.454.2505 fax 780.454.2655
www.campbellsci.ca

Copyright © 1990, 2002
Campbell Scientific, Inc.
Printed March 2002

AirLink® GX400 Multipurpose Intelligent Gateway

Fully Featured for Mobile and Fixed Environments

RUGGED VERSATILITY

The AirLink GX400 multi-purpose intelligent gateway is ideal for a myriad of machine-to-machine applications. A small, rugged form factor and multiple interfaces give the GX400 the versatility for location-aware applications in mobile and fixed environments at an affordable price.

EXPANDABLE, FLEXIBLE, MODULAR PLATFORM

The GX400 achieves high performance and reliability, and offers GPS, 3G mobile broadband connectivity, and ALEOS intelligence. An expansion slot enables the easy addition of I/O and communications ports, providing unparalleled flexibility and versatility. The existence of the expansion slot on the GX400 enables feature additions without comprehensive design changes and/or further certification.

The GX400 is designed for use in mobile environments (AVL/tracking, field service, public safety) or fixed/portable settings (industrial, utilities, security, enterprise, point-of-sale). A "one device fits all" solution allows customers to deploy and manage the same device for multiple applications, simplifying deployment and management.

RUGGED INTELLIGENCE

ALEOS™ embedded intelligence, powers AirLink devices, and supports 24/7 always-on availability, persistent connectivity, end-to-end security, real-time two-way data exchange, and remote device management. ALEOS features over 700 configurable parameters, including machine, routing and location protocols, security, events reporting and much more.

REMOTE MANAGEMENT

ALEOS facilitates the comprehensive remote management capabilities of our AirLink device management tools to enable remote configuration, administration, and control of deployments of any size, from one device to thousands.

INTELLIGENCE ON THE EDGE MADE EASY

The new ALEOS Application Framework is a powerful embedded software environment that helps accelerate M2M solutions development. By leveraging ALEOS embedded intelligence for foundational M2M features, ALEOS AF provides the best of both worlds by supporting both out-of-the-box configuration with a programming environment to build customized solutions.

ALEOS AF enables developers to concentrate their development resources on building their specific application.

KEY BENEFITS:

- Persistent, reliable network connectivity
- Versatile for M2M applications, including mobile and fixed solutions
- High performance and reliability at a mid-tier price
- Remote management, control and configuration
- Easy installation and seamless integration with legacy equipment
- Application Framework for developing custom M2M applications

POWERED BY: ALEOS™

SIERRA WIRELESS™ | AirLink®

AirLink® GX400 Multipurpose Intelligent Gateway

Technical Specifications

PRODUCT FEATURES
- ALEOS Embedded Intelligence
- Comprehensive device management and configuration
- Highly configurable with easy to use interface
- AirLink Configurable Rules Engine
- ALEOS Application Framework for custom M2M application development
- Expansion card slot
- Rugged design
- Multiple connection options
- Robust ARM 11-class processor
- 5 Year Warranty

SECURITY
- Onboard IPsec SSL VPN Client
- VPN Pass-Through (AH protocols)
- GRE Tunneling
- MAC Address Filtering
- IP Filtering
- Port Filtering
- SSH
- HTTPS

GPS TECHNOLOGY
- Precision GPS
- Time to First Fix: 39 sec.
- Garmin FMI support
- Accuracy: 3M 68% CEP

TECHNOLOGY
- HSPA+ with fallback to: HSPA, HSDPA, UMTS, EDGE, GPRS

or
- EV-DO Rev. A with fallback to: CDMA EV-DO (Rev. 0), CDMA 1xRTT

BANDS
- Quad-Band HSUPA
  850, 900, 1900, 2100 MHz
- Quad-Band GSM/GPRS
  850, 900, 1800, 1900 MHz

or
- Dual Band EV-DO Rev. A
  800, 1900 MHz

ENVIRONMENTAL
- Operating Temperature:
  -30°C to +70°C / -22°F to +158°F
- Storage Temperature:
  -40°C to +85°C / -40°F to +185°F

DIMENSIONS
- 143 mm x 96 mm x 44 mm
  5.6 in x 3.8 in x 1.7 in
- 341 grams
  12 oz

STANDARDS/APPROVALS
- FCC, Industry Canada
- RoHS Compliant
- CE, E-Mark
- Mil-Spec 810-F, IP64
- Class 1 Div 2
- Carrier Specific Approvals

HOST INTERFACES
- 10/100 Base-T RJ45 Ethernet
- RS-232 Serial Port
- USB On The Go
- 1 Digital I/O Port
- Wi-Fi access point or client (optional expansion card)
- 3 SMA Antenna Connectors (RF, GPS, Rx Diversity)

APPLICATIONS:
- Field Service
- Energy + Utilities
- Security Surveillance
- Retail / Point-of-Sale
- Infrastructure Monitoring
- Digital Signage
- Automatic Vehicle Location

APPLICATION INTERFACES
- TCP/IP, UDP/IP, DHCP, HTTP, NMEA, TAIP, TSIP, GPS

LED INDICATORS
- Network
- Signal Strength
- Activity
- Power/GPS

Sierra Wireless, the Sierra Wireless logo, AirLink, ALEOS and the red wave design are trademarks of Sierra Wireless. Other registered trademarks that appear on this brochure are the property of the respective owners.
© 2012 Sierra Wireless, Inc. www.sierrawireless.com

SIERRA WIRELESS™ | AirLink®

CAMPBELL SCIENTIFIC
WHEN MEASUREMENTS MATTER

ENC10/12, ENC12/14, ENC14/16, ENC16/18

Fiberglass Weather-Resistant Enclosures

Rugged, Versatile

Campbell components mount easily and securely

Overview

Campbell Scientific offers fiberglass-reinforced polyester enclosures for housing our dataloggers and peripherals. Dataloggers and peripherals housed in an enclosure with desiccant are protected from water and most pollutants.

Benefits and Features

- Weather resistant to protect instruments
- Backplate designed so that Campbell Scientific components mount easily and securely
- White, UV-stabilized enclosure reflects solar radiation—reducing temperature gradients inside the enclosure without requiring a separate radiation shield

Enclosure Supply Kit

The enclosure supply kit is included with these enclosures. The assembled equipment aids in mounting your equipment inside the enclosure as well as monitoring relative humidity and sealing the enclosure. The kit consists of desiccant packs, humidity indicator card, cable ties, putty, screws, grommets, PVC plug, and a Phillips-head screwdriver.

Cable-Entry Option Details

Conduit(s)

Multiple cables can be routed through one conduit. A plug included in the 7363 enclosure supply kit can reduce the conduit's internal diameter to 0.5 in. (1.3 cm). The enclosure supply kit also contains the putty used to seal each conduit.

Entry Seals

Cable entry seals have a more water-tight seal than the conduits. Each entry seal is compressed around one cable. A small vent is included to equalize pressure with the atmosphere. The entry seals come in three sizes that accept the following cable diameters:

- Large—6 to 13 mm (0.24 to 0.51 in.)
- Medium—5.8 to 10 mm (0.23 to 0.39 in.)
- Small—3 to 7 mm (0.12 to 0.28 in.)

The number of cable entry seals provided depends on the enclosure model:

- ENC10/12—(1) medium, (2) small
- ENC12/14—(2) medium, (2) small
- ENC14/16—(2) large, (2) medium, (2) smalll
- ENC16/18—(2) large, (2) medium, (2) small

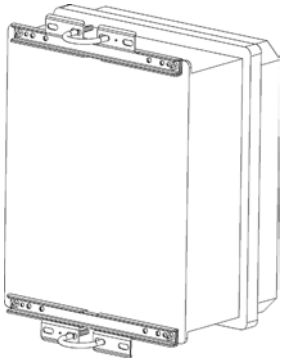

At left is an enclosure with the *-MM* mount option. The bracket is ready to be attached to a mast or user-supplied vertical pipe with a 1.25-in. to 2.1-in. outer diameter.

At right is an exploded view of the -TM option. It shows the bracket components and how the enclosure attaches to a tower.

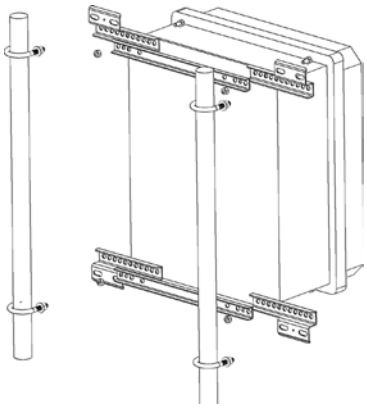

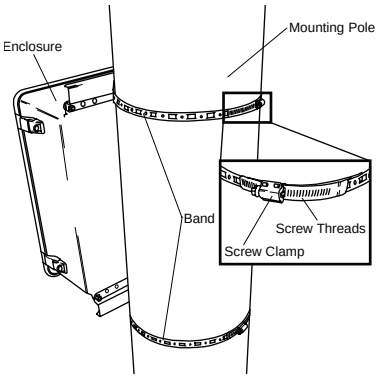

At left shows the -PM option, where the enclosure is mounted to a large diameter pole via band clamps.

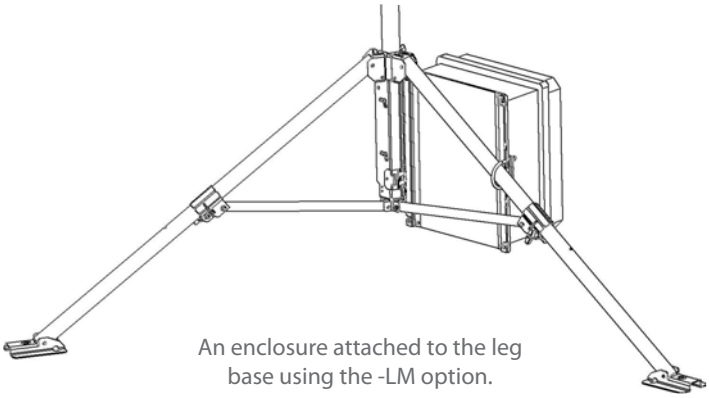

An enclosure attached to the leg base using the -LM option.

Ordering Information

Fiberglass Enclosures

ENC10/12	Weather-Resistant 10 x 12 inch Enclosure. Includes an internal plate punched with a grid of one-inch-on-center holes for mounting devices.
ENC10/12R	Weather-Resistant 10 x 12 inch Enclosure with raised lid. Includes an internal plate punched with a grid of one-inch-on-center holes for mounting devices.
ENC12/14	Weather-Resistant 12 x 14 inch Enclosure. Includes an internal plate punched with a grid of one-inch-on-center holes for mounting devices.
ENC14/16	Weather-Resistant 14 x 16 inch Enclosure. Includes an internal plate punched with a grid of one-inch-on-center holes for mounting devices.
ENC16/18	Weather-Resistant 16 x 18 inch Enclosure. Must choose a backplate option (see below).

Enclosure Hole Options

-SC	One Conduit for cable entry.
-DC	Two horizontally-arranged 1.5-in. diameter conduits for cable entry.
-VC	Two vertically-arranged 1.5-in. diameter conduits for cable entry (available for the ENC16/18 only).
-ES	Individual-Cable Entry Seals. The number of cable entry seals provided depends on the enclosure model (see page 1 for details)

Enclosure Mounts Options

Besides the options listed below, special brackets are also available for attaching enclosures to CTS Towers, Rohn Towers, Aluma Towers, or other non-Campbell Scientific instrument mounts. Contact Campbell Scientific for more information.

- MM	Tripod Mast Mounting for attachment to the mast of one of our tripods or to a user-supplied pipe with a 1.25-in. to 2.1-in. outer diameter.
-LM	Tripod Leg Mounting. This option allows an ENC10/12, ENC12/14, or ENC14/16 to be attached to the leg base of a CM106, CM110, CM115, or CM120 tripod. For the ENC16/18 enclosure, this option allows the enclosure to be attached to the leg base of a CM106 tripod.
-TM	Tower Mounting for attachment to a UT10, UT20, or UT30 tower (see note at bottom of page).
-PM	Pole Mounting for attachment to a large-diameter pole with a 4 to 10 in. outer diameter.

Backplate Options for ENC16/18 only

-SB	Standard Backplate with a grid of one-inch-on-center holes for mounting devices.
-EB	Backplate and sideplate. Both plates include a grid of one-inch-on-center holes for mounting devices.

***Note**: Enclosures with the -TM option are shipped configured for the UT10 tower. UT20 and UT30 customers will need to:*

(1) Remove the bolts attaching the bracket to the enclosure.
(2) Slide out the flange sections so that the distance between the center of each flange is 17 inches.
(3) Reattach the bracket to the enclosure using the original bolts.

Ordering Information Continued

Antenna Cable/Bulkhead Installations

These accessories are offered for enclosures that will house a cellular phone, satellite transmitter, or radio. They allow an antenna to be connected to the outside of the enclosure.

19332 Compatible with the type N-to-type N antenna cable used with the RF320-series radios, RF310-series radios, and GOES satellite transmitters.

19335 Compatible with the type N-to-RPSMA antenna cable used with the RF401-series spread spectrum radios, CR200(X)-series dataloggers, or AVW200-series Interfaces.

19334 Compatible with the type N-to-SMA antenna cable used with the RF450 radio or RavenXT-series cellular modems.

19333 Compatible with the type N-to-TNC antenna cable used with the retired Raven100-series or retired Redwing100-series digital cellular modems.

19336 Compatible with the type SMA-to-SMA antenna cable used with the GPS device included with our GOES satellite transmitters.

Other Campbell-Installed Accessories

28701 Enclosure Desiccant and Document Holder Installed in Enclosure Lid. It contains a zipped bag for two-packs of desiccant and an open pocket for documents.

27814 CD100 Mountable Display with Keypad Installed in Enclosure Lid. The CD100 provides the same operation and functionality as the CR1000KD, allowing both data entry and display without opening the enclosure. It is typically used with our CR800 and CR1000 dataloggers.

18132 CD295 DataView II Display Installed in Enclosure Lid. The CD295 displays real-time data only, and is used with PakBus® dataloggers (i.e., CR200(X), CR800, CR850, CR1000, CR3000).

18132 CD294 DataView Display Installed in Enclosure Lid. The CD294 displays real-time data only, and is used with mixed-array dataloggers (e.g., CR510, CR10X).

18166 Door Open Indicator Installed in Enclosure. This small accessory monitors when the door of the enclosure is open. The switch is monitored with a datalogger control port.

Miscellaneous Accessories

10525 User-installed two-pack desiccant holder that mounts to the inside of the enclosure lid.

CS210 Enclosure Humidity Sensor contains an Elan HM2000-series precision bulk polymer relative humidity sensor.

6714 Replacement Desiccant 4 Unit Bag (Qty 20).

28960 Enclosure Stack Mounting Kit.

18165 User-installed door open indicator. This small accessory monitors when the door of the enclosure is open. The switch is monitored with a datalogger control port.

The CS210 senses relative humidity levels inside the environmental enclosure for the purpose of scheduling desiccant exchange. The desiccant should be exchanged when the sensor indicates an RH level of 35% or more inside the enclosure.

The CD100 has a vacuum fluorescent display for responsive use through a very wide operating temperature range. It has a water and dust ingress protection rating of IP66 when installed.

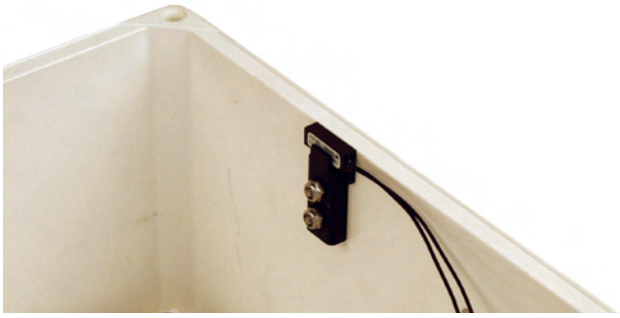

The door switch indicator consists of an actuator and a magnetic switch—one is located on the case side, the other on the door side of the enclosure. It monitors when the door of the enclosure is open.

The 28960 kit includes two leg brackets and a top bracket. It is used to raise a datalogger up off of the backplate so that wiring is easier or so that components can be stacked.

Specifications

	ENC10/12	ENC12/14	ENC14/16	ENC16/18
Can House	CR200(X)-series datalogger, power supply, and a small peripheral. A CR800, CR850, or CR1000 can also be housed if using the 28960 stack bracket kit.	CR200(X)-series, CR800, CR850, CR1000, or CR3000 datalogger, a power supply, and one or more peripherals, depending on the footprint	CR200(X)-series, CR800, CR850, CR1000, CR3000, or CR5000 datalogger, power supply, and one or more peripherals (depending on the peripheral's footprint).	CR200(X)-series, CR800, CR850, CR1000, CR3000, or CR5000 datalogger, power supply, and two or more peripherals (depending on the peripheral's footprint).
Color	White (reflects solar radiation, reducing temperature gradients inside the enclosure without using a separate radiation shield)			
Construction	Fiberglass-reinforced polyester enclosure with door gasket, external grounding lug, stainless-steel hinge, and lockable hasps			
Classification	NEMA 4X (before being modified for cable entry)			
Dimensions	25.4 x 30.5 x 11.4 cm (10 x 12 x 4.5 in.)	30.5 x 35.6 x 14 cm (12 x 14 x 5.5 in.)	35.6 x 40.6 x 14 cm (14 x 16 x 5.5 in.)	40.6 x 45.7 x 22.9 cm (16 x 18 x 9 in.)
Weight	4.1 kg (9.0 lb)	5 kg (11.2 lb)	6 kg (13 lb)	7.7 kg (17 lb)

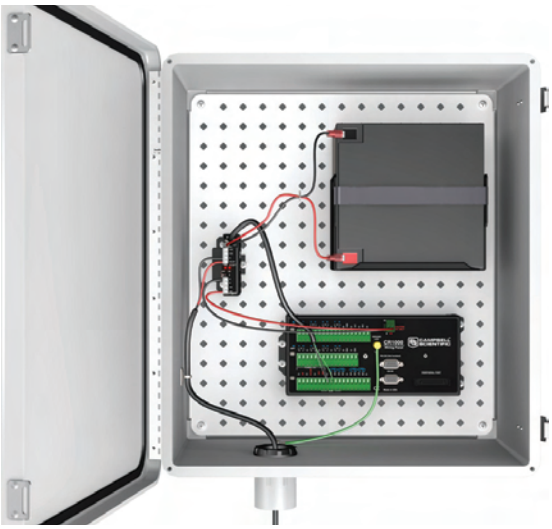

An ENC16/18 houses a CR1000 datalogger, CH200 Regulator, and BP24 battery pack. This enclosure has a -SC enclosure hole option.

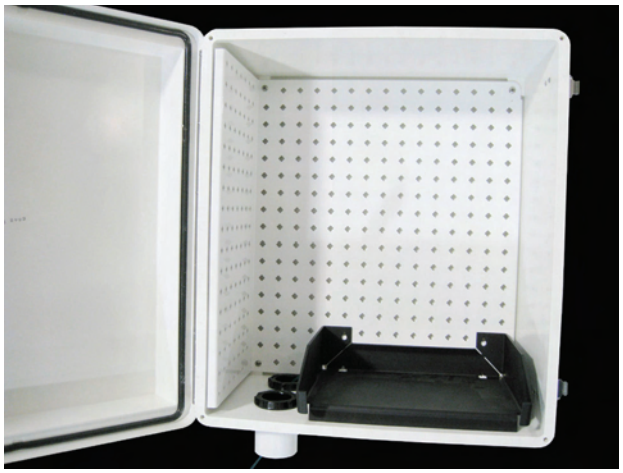

This ENC16/18 has the -VC enclosure hole option and the -EB backplate option, which includes a backplate and sideplate.

The above enclosure shows the horizontal arrangement of the conduits when the *-DC* enclosure hole option is chosen.

© 2012
Campbell Scientific, Inc.
October 31, 2012

Specifications

Specifications

Concentration Ranges (Auto-ranging)	0-0.5, 0-1, 0-10 0-65 mg/m3
Laser	670 nm, 5 mW
Sensitivity	0.001mg/m3
Sample Period	1 sec
Sample Flow Rate	2 LPM
Pump Type	Diaphram 10,000 hr
Accuracy	8% of NIOSH 0600
Precision	0.003 mg/m3 or 2% reading
Particle Size Sensitivity Range	0.1-100 micron
Long term Stability	5% reading
Sensor Type	Forward Light Scatter
Average Period	1 – 60 minutes
Display	4X20 LCD
Internal Battery (Optional)	12 VDC 12 Amp-Hr, lead acid
Power Consumption	350mA (no heater) 1.1 A (w/heater)
Internal Battery Operation, no heater	>30 Hours
with heater	10 Hours
Battery Type	Lead Acid
Size	10.5 (267) X 9.25 (235) X 5.7 (145) inches (mm)
MOI Service Period	2 yrs
Programmable Auto-Zero	15min to 24 hours
Programmable Auto-Span	15min to 24 hours
Traceable Testing	Gravimetric
Sample Line Heater	Configurable RH Con trolled
Outputs	Analog 0-1,0-2.5, 0-5VDC, RS232
Data Storage Capacity	12000 Records
Temperature Compensation	Standard
Temperature Range	-10 deg to 50 deg C
RH Measurement	Internal
Ambient Temperature	-30 deg to 50 deg C
Ambient Pressure	1040 to 600 mbars
Alarm	Contact Closure
Available Cut Points	TSP, PM10, PM2.5, PM1

Standard Equipment
Universal Voltage Power Supply
Battery Charger Internal
47 mm Filter Holder
Comet Software
TSP Inlet
Inlet Heater
Digital Output Cable
Instruction Manual

Options
PM10, PM2.5, PM1 Sharp-Cut Cyclone
Extra 47 mm Filter Holders
Aluminum Tripod
MicroMet Software
Radio Modem
Phone Modem
Satellite
Wind Speed/Direction Sensor
Ambient RH
External Battery Cable
Battery

Met One Instruments, Inc.
Sales & Service: 1600 Washington Boulevard, Grants Pass, Oregon 97526 • Tel 541/471-7111, Fax 541/471-7116
Regional Sales & Service: 3206 Main Street, Suite 106, Rowlett, Texas 75088 • Tel 972/412-4747, Fax 972/412-4716
http://www.metone.com

11/08

E-SAMPLER™

The New Standard in Real-Time Aerosol Monitoring

The E-SAMPLER is the most feature-packed light-scatter Aerosol Monitor available. Whatever your monitoring needs, the E-sampler will provide accurate, dependable and relevant data.

Features
- Programmable Auto-Zero
- Programmable Auto-Span
- Auto-ranging (1 to 65000 µm/m3)
- Automatic Flow Control Protocol
- Internal Battery (30 Hours Operation without heater & 10 Hours with heater.)
- Laser-Diode Precise Optical Engine
- Integral 47mm Analysis Filter
- Ambient Pressure and Temperature
- Internal Datalogger
- PM_{10}, $PM_{2.5}$, PM_1, TSP Monitoring
- Aluminum Weatherproof Enclosure
- Sheath-Air protected Optics
- Completely Self-Contained
- No Tools Filter Replacement

Applications
- Ambient Air Monitoring
- Remediation Site Perimeter Monitoring
- Indoor Air Quality Monitoring
- Source Monitoring
- Visibility Monitoring
- Mobile Monitoring

Met One Instruments, Inc.

E-SAMPLER™

Dual Technology
The E-SAMPLER is a dual technology instrument that combines the unequalled real-time measurement of light scatter with the accuracy standard of filter methods. The simple filter loading process testifies to the seamless blending of both technologies. Filters can be extracted and replaced in less than one minute and filter medium can be selected based on laboratory analysis. Particulate loading on the filter does not reduce performance due to the Met One actual flow control protocol. Ambient temperature and pressure are measured and actual flow is calculated and controlled by the E-SAMPLER microprocessor independent of filter loading change.

Principle
The E-SAMPLER provides real-time particulate measurement through near-forward light scattering. An internal rotary vane pump draws air at 2 LPM into the sensing chamber where it passes through visible laser light. Aerosols in the air scatter light in proportion to the particulate load in the air. Scattered light is collected by precise glass optics and focused on a PIN diode. Rugged state of the art electronics measure the intensity of the focused light and output a signal to the CPU. The output is linear to concentrations greater than 65,000 ug/m3. Every E-SAMPLER is factory calibrated using polystyrene latex spheres of known index of refraction and diameter at multiple points to validate linearity.

Maintenance
Each E-SAMPLER has two internal filters (not the 47mm Analysis Filter) to protect sensitive optics and prevent damage to the flow components. Both filters are accessible from

the front panel. Coin slots enable these filters to be removed and checked or replaced without any tools. Filter life for both will exceed 1 year in the harshest of conditions. All E-SAMPLERS have sheath air from the internal filters that continually curtain the optics. This sheath air protection allows the E-SAMPLER to be used in adverse environments without performance degradation. Even in harsh conditions the E-SAMPLER will operate to specifications for 2 years without need of recalibration.

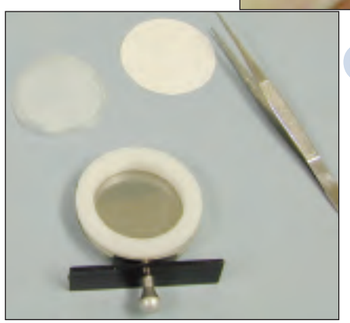

aerosol

continuous

monitoring

Operation
The E-SAMPLER is rugged, portable and easy to use. The all aluminum enclosure is not only rugged but provides electronic stability by filtering potential RF interference. Set-up is a snap with the quick connect system which works with the EX-905 tripod. For other mounting applications, holes are provided to fasten to any structure. Simply turning the monitor on will start a sample using the most recent parameters. The unit will continue to operate until user intervention or battery failure. Auto-Zero and Auto-Span ensure that the data collected will be of the highest quality. Both Zero and Span can be operated manually or individually programmed at varying time bases (15 minutes to 24 hours). The E-SAMPLER can also be configured for start/stop times, recording periods, averaging time and other parameters.

Data Collection and Software
Optional MicroMet Plus is a complete communications, data collection and data reporting tool. This software supports modem, radio, direct connection and generates summary reports as well as recordings and charts. Comet software included which provides easy to use terminal access to E-Sampler data.

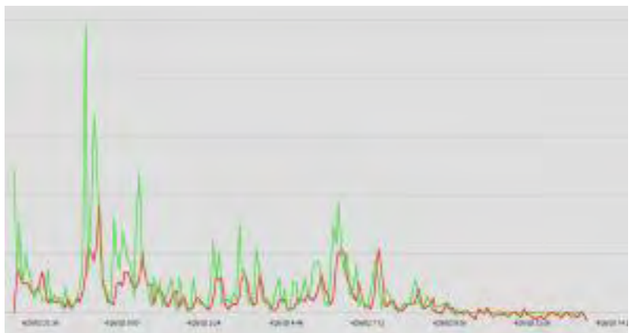

APPENDIX F – DUST FALL MONITORING GUIDANCE

Section G

AIR CONSTITUENTS - INORGANIC

© Her Majesty the Queen in
Right of the Province of British Columbia
2009
All Rights Reserved.

TABLE OF CONTENTS

SECTION G Air Constituents - Inorganic

Particulate - Total

Parameter

Particulate – Total**:** Gravimetric

Analytical Method and EMS Code

a) Gravimetric intermediate results **TP-T X484**
b) Loading results **TP-T CAL1**

Introduction

A 10.4 cm (4.1") diameter polyethylene canister containing a collection medium is exposed to the ambient air for a period of approximately 30 days. The sample subsequently undergoes gravimetric and/or chemical analysis in the laboratory plus loading calculation.

Method Summary

The Total Particulate is the sum of Insoluble Particulate and the Soluble Particulate.

MDL

0.1 mg for intermediate result

Units

a) Intermediate results: mg
b) Loading results: $mg/dm^2/d$

Matrix

Particulate

Sample Handling and Preservation

If the temperature during the sampling period is below 0°C, either isopropanol or 50% V/V isopropanol/water is used as the solution in the canister.

Principle or Procedure

Field Preparation

a) Add 500 mL of the collection medium to the 10.4 cm diameter polyethylene canister (canister must have a tight fitting, waterproof lid). Usually deionized water, to which 2.0 mL diluted algae inhibitor has been added, is used. However, if the temperature during the sampling period is below 0°C, either isopropanol or 50% V/V isopropanol/water is used. The algae inhibitor is obtained commercially and diluted 1:100 before use (Note: algae inhibitor must be added to all analytical blanks).

b) Ship the prepared canisters to the field.

Laboratory Preparation

a) Transfer the sample quantitatively to a 2 litre beaker, filtering through a 20 mesh sieve to remove extraneous materials such as leaves, twigs and bugs. If the collection medium was isopropanol, use 50 to 100 mL deionized water in the transfer process.

b) Reduce the sample volume to about 200 mL by evaporating on a hot plate.

c) Allow the sample to cool, proceed to further analyses of the requested parameters i.e., step 4 of Particulate Soluble and/or Particulate Insoluble procedures.

Calculation

Total Particulate, mg = $P_1 + P_2$

where: P_1 = Insoluble Particulate in mg
P_2 = Soluble Particulate in mg.

Quality Control

Retain at least four of the canisters so that they may subsequently be used in the determination of the various blank values.

References

a) American Society of Testing and Materials. Annual Book of ASTM Standards; Part 26. Philadelphia, (1974).

Revision History

April 1, 1996:	Initial draft
October 29, 1996:	Procedure vetted by private sector laboratories
July 9, 1997:	Conversion to EMS code; unit correction as confirmed by E. Tradewell and N. Peppin
July 14, 1997:	Term “Dustfall” replaced by “Particulate” on request of E. Tradewell
January 5, 1998:	EMS codes confirmed
December 31, 2000:	Minor editing; Supplement #2 merged into main Lab Manual.

Particulate - Total Ashed

Parameter Particulate - Total Ashed

Analytical Method and EMS Code
a) Gravimetric intermediate result **ASHT X484**
b) Loading result **ASHT CAL1**

Introduction A 10.4 cm (4.1") diameter polyethylene canister containing a collection medium is exposed to the ambient air for a period of approximately 30 days. The sample subsequently undergoes gravimetric and/or chemical analysis in the laboratory plus loading calculation.

Method Summary The Total Ashed Particulate is the sum of the Insoluble Ashed and Soluble Ashed Particulate.

MDL 0.1 mg for intermediate results

Units
a) Intermediate results: mg
b) Loading results: $mg/dm^2/d$

Matrix Particulate

Principle or Procedure

Calculation Total Ashed Particulate = $P_1 + P_2$

where: P_1 = Insoluble Ashed Particulate

P_2 = Soluble Ashed Particulate

Quality Control A blank should be carried through all steps of the procedure.

References
a) American Society of Testing and Materials. Annual Book of ASTM Standards; Part 26. Philadelphia, (1974).

Revision History

April 1, 1996:	Initial draft
October 29, 1996:	Procedure vetted by private sector laboratories/
July 9, 1997:	SEAM code replaced by EMS code; units correction
July 14, 1997:	Term “Dustfall” replaced by “Particulate” on request from E. Tradewell
January 5, 1998:	EMS codes confirmed
December 31, 2000:	Minor editing; Supplement #2 merged into main Lab Manual.

Particulate - Total Combustible

Parameter Particulate - Total Combustible

Analytical Method and EMS Code
a) Gravimetric intermediate result **CP-T X484**
b) Loading result **CP-T CAL1**

Introduction A 10.4 cm (4.1") diameter polyethylene canister containing a collection medium is exposed to the ambient air for a period of approximately 30 days. The sample subsequently undergoes gravimetric and/or chemical analysis in the laboratory plus loading calculation.

Method Summary The Total Combustible Particulate is the difference between the Total Particulate and the Total Ashed Particulate.

MDL 0.1 mg for intermediate results

Units
a) Intermediate results: mg
b) Loading results: $mg/dm^2/d$

Matrix Particulate

Principle or Procedure:

Calculation Total Combustible Particulate = $P_1 - P_2$

where: P_1 = Total Particulate
P_2 = Total Ashed Particulate

Quality Control A blank should be carried through all steps of the procedure.

References
a) American Society of Testing and Materials. Annual Book of ASTM Standards; Part 26. Philadelphia, (1974).

Revision History

April 1, 1996:	Initial draft
October 29, 1996:	Procedure vetted by private sector laboratories.
July 9, 1997:	SEAM code replaced by EMS code; units correction
July 14, 1997:	Term “Dustfall” replaced by “Particulate” on request from E. Tradewell.
January 5, 1998:	EMS codes confirmed
December 31, 2000:	Minor editing; Supplement #2 merged into main Lab Manual.

Particulate - Insoluble

Parameter Particulate Insoluble

Analytical Method and EMS Code
a) Gravimetric intermediate results **TP-I X484**
b) Loading results **TP-I X175**

Introduction A 10.4 cm (4.1") diameter polyethylene canister containing a collection medium is exposed to the ambient air for a period of approximately 30 days. The sample subsequently undergoes gravimetric and/or chemical analysis in the laboratory plus loading calculation.

Method Summary The prepared sample (see Particulate-Total procedure) is passed through a 0.45 µm membrane filter. The residue retained by the filter after drying to a constant weight at 105°C constitutes the insoluble particulate intermediate results with units of mg. This value is then converted to a loading unit of $mg/dm^2/d$.

MDL 0.1 mg for intermediate results

Units
a) Intermediate results: mg
b) Loading results: $mg/dm^2/d$

Matrix Particulate

Principle or Procedure:

Apparatus
a) Filtration apparatus, one litre vacuum flask fitted with a filtration assembly
b) Porcelain crucibles, 35 mL
c) Drying oven
d) Muffle furnace
e) Desiccator with desiccant
f) Analytical balance

Procedure
a) Ignite a clean porcelain crucible at 550°C in the muffle furnace for 1 hour; cool for 3 hours in a desiccator, then weigh.

b) Weigh a 0.45 µm filter (Gelman HT 450, 47 mm diameter). Place filter in desiccator.

c) Carefully place the 0.45 µm filter in the filtration apparatus.

d) Filter the prepared sample (see Particulate-Total). Note: Wash the sample container with deionized water to ensure all the sample is passed through the filter.

e) Transfer the filtrate quantitatively to a 500 mL bottle, dilute to volume, and then transfer to a polyethylene container for further analysis.

f) Return the filter and retained residue to the porcelain crucible; dry for 3 hours in an oven at 105°C; cool in desiccator and weigh.

Calculations

Insoluble Particulate, mg = $\{(W_1 - W_2) - C\}$

where W_1 = weight of filter + crucible + residue in mg
W_2 = weight of filter + crucible in mg
C = weight contribution from blank in mg

Loading calculation: units of $mg/dm^2/d$

Quality Control

A blank should be carried through all steps of the procedure.

References

a) American Society of Testing and Materials. Annual Book of ASTM Standards; Part 26. Philadelphia, (1974).

Revision History

April 1, 1996:	Initial draft
October 29, 1996:	Procedure vetted by private sector laboratories.
July 14, 1997:	SEAM code replaced by EMS code; units; minor editing revisions; term “Dustfall” replaced by “Particulate” on request of E. Tradewell.
January 5, 1998:	EMS codes confirmed
December 31, 2000:	Minor editing; Supplement #2 merged into main Lab Manual.

Particulate - Insoluble Ashed

Parameter

Particulate – Insoluble Ashed

Analytical Method and EMS Code

a) Gravimetric Intermediate results **AP-I X484**
b) Loading results **AP-I X175**

Introduction

A 10.4 cm (4.1") diameter polyethylene canister containing a collection medium is exposed to the ambient air for a period of approximately 30 days. The sample subsequently undergoes gravimetric and/or chemical analysis in the laboratory plus loading calculation.

Method Summary

The prepared sample (see Particulate-Total procedure) is passed through a 0.45 µm membrane filter. The residue after ignition at 550°C constitutes the ashed insoluble particulate.

MDL

0.1 mg for intermediate result

Units

a) Intermediate results: mg
b) Loading results: $mb/dm^2/d$

Matrix

Particulate

Principle or Procedure

Apparatus

a) Filtration apparatus, one litre vacuum flask fitted with a filtration assembly
b) Porcelain crucibles, 35 mL
c) Muffle furnace
d) Desiccator with desiccant
e) Analytical balance

Procedure

a) Ignite a clean porcelain crucible at 550°C in the muffle furnace for 1 hour; cool for 3 hours in a desiccator, then weigh.

b) Weigh a 0.45 µm filter (Gelman HT 450, 47 mm diameter). Place filter in desiccator.

c) Carefully place the 0.45 µm filter in the filtration apparatus.

d) Filter the prepared sample (see Particulate-Total procedure). Note: Wash the sample container with deionized water to ensure all the sample is passed through the filter.

e) Return the filter and retained residue to the porcelain crucible; dry for 3 hours in an oven at 105°C; cool in desiccator and weigh.

f) Transfer the crucible and filter to a muffle furnace.

g) Heat at 550°C for 1 hr, cool for 3 hr in a desiccator and then weigh, W1.

Calculations

Ashed Insoluble Particulate = $\{(W_1 - W_2) - C\}$

where W_1 = weight of filter + crucible + residue in mg, (after ashing)
W_2 = weight of filter + crucible in mg, (after ashing)
C = weight contribution from blank in mg

Loading calculation to units of $mg/dm^2/d$

Quality Control

A blank should be carried through all steps of the procedure.

References

a) American Society of Testing and Materials. Annual Book of ASTM Standards; Part 26. Philadelphia, (1974).

Revision History

April 1, 1996:	Initial draft
October 29, 1996:	Procedure vetted by private sector laboratories.
July 15, 1997:	SEAM code replaced with EMS code; units correction; minor editing corrections; term “Dustfall” replaced by “Particulate” on request of E. Tradewell
January 5, 1998:	EMS codes confirmed
December 31, 2000:	Minor editing; Supplement #2 merged into main Lab Manual.

Particulate - Soluble

Parameter Particulate Soluble

Analytical Method and EMS Code
a) Gravimetric intermediate results **TP-S X484**
b) Loading results **TP-S X175**

Introduction A 10.4 cm (4.1") diameter polyethylene canister containing a collection medium is exposed to the ambient air for a period of approximately 30 days. The sample subsequently undergoes gravimetric and/or chemical analysis in the laboratory plus loading calculation.

Method Summary The prepared sample (see Particulate Total procedure) is passed through a 0.45 µm membrane filter. A portion of the filtrate is then evaporated on an oven; the portion which dries to constant weight at 105°C constitutes the soluble particulate.

MDL 0.1 mg for intermediate results

Units
a) Intermediate results: mg
b) Loading results: $mg/dm^2/d$

Matrix Particulate

Principle or Procedure:

Apparatus
a) Inert crucibles, 100 mL (e.g. nickel, porcelain, platinum)
b) Drying oven
c) Steam Bath
d) Desiccator with desiccant
e) Analytical balance

Procedure

a) Ignite a clean porcelain crucible at 550°C in the muffle furnace for 1 hour; cool for 3 hours in a desiccator, then weigh.

b) Weigh a 0.45 µm filter (Gelman HT 450, 47 mm diameter). Place filter in desiccator.

c) Carefully place the 0.45 µm filter in the filtration apparatus.

d) Filter the prepared sample (see Particulate-Total procedure). Note: Wash the sample container to ensure all the sample is passed through the filter.

e) Return the filter and retained residue to the porcelain crucible; dry for 3 hours in an oven at 105°C; cool in desiccator and weigh.

f) Transfer the filtrate quantitatively to a 500 mL beaker, dilute to volume, and then transfer to a polyethylene container.

g) Dry a clean platinum crucible to constant weight at 550°C; cool in a desiccator and then weigh.

h) Measure 2 x 50 mL of the prepared filtrate into the crucible.

i) Evaporate overnight (24-48 hours) in an oven at 105°C; cool in a desiccator and weigh.

Calculations

$$\text{Soluble particulate, mg} = \frac{V_1}{V_2}\{(W_1 - W_2) - C\}$$

where V_1 = mL filtrate diluted (at step 6)
V_2 = mL filtrate evaporated
W_1 = weight of crucible + residue in mg
W_2 = weight of crucible in mg
C = weight contribution from blank in mg.

This is followed by a loading calculation to units of $mg/dm^2/d$.

Quality Control

A blank should be carried through all steps of the procedure.

References

a) American Society of Testing and Materials. Annual Book of ASTM Standards; Part 26. Philadelphia, (1974).

Revision History

April 1, 1996:	Initial draft
October 29, 1996:	Procedure vetted by private sector laboratories.
July 15, 1997:	SEAM code replaced with EMS code; units correction; minor editing corrections; term “Dustfall” replaced by “Particulate” at request of E. Tradewell.
January 5, 1998:	EMS codes confirmed
December 31, 2000:	Minor editing; Supplement #2 merged into main Lab Manual.

Particulate - Soluble Ashed

Parameter Particulate - Soluble Ashed

Analytical Method and EMS Code
a) Gravimetric intermediate results **AP-S X484**
b) Loading results **AP-S X175**

Introduction A 10.4 cm (4.1") diameter polyethylene canister containing a collection medium is exposed to the ambient air for a period of approximately 30 days. The sample subsequently undergoes gravimetric and/or chemical analysis in the laboratory followed by loading calculation.

Method Summary The prepared sample (see Particulate-Total procedure) is passed through a 0.45 µm membrane filter. A portion of the filtrate is then evaporated in a oven; the portion which ignites to constant weight at 550°C constitutes the ashed soluble particulate. It should be noted that if the ashed soluble particulate procedure is completed, this will preclude phosphorus and metal analysis.

MDL 0.1 mg particulate

Units
a) Intermediate results: mg
b) Loading results: $mg/dm^2/d$

Matrix Particulate

Principle or Procedure:

Apparatus
a) Inert crucibles, 100 mL (e.g. nickel, porcelain)
b) Muffle Furnace
c) Desiccator with desiccant
d) Analytical balance

Procedure
a) After completing step 9 in the Particulate Soluble procedure transfer the crucible to a muffle furnace.
b) Heat at 550^0C for 1 hr; cool for 3 hr in a desiccator and then weigh.

Calculation

$$\text{Soluble Ashed Particulate, mg} = \frac{V_1\{(W_1 - W_2) - C\}}{V_2}$$

where:
V_1 = mL filtrate diluted
V_2 = mL filtrate evaporated
W_1 = weight of platinum crucible + residue, mg
W_2 = weight of platinum crucible, mg
C = weight of contribution from blank, mg.

This is followed by a loading calculation.

Quality Control

A blank should be carried through all steps of the procedure.

References

a) American Society of Testing and Materials. Annual Book of ASTM Standards; Part 26. Philadelphia, (1974).

Revision History

April 1, 1996:	Initial draft
October 29, 1996:	Procedure vetted by private sector laboratories.
July 23, 1997:	SEAM code replaced with EMS code; units correction; minor editing corrections; term “Dustfall” replaced by “Particulate” on request of E. Tradewell.
January 6, 1998:	EMS codes confirmed
December 31, 2000:	Minor editing; Supplement #2 merged into main Lab Manual.

Particulate - Soluble – Anions and Cations by Ion Chromotography

Parameter

NO3-: Nitrate-Soluble
SO4-: Sulphate-Soluble
Cl-S: Chloride-Soluble
Na-S: Sodium-Soluble
NH4-: Ammonium-Soluble
K--S: Potassium Soluble

Analytical Method

Ion Chromatography-Anion

EMS codes

Intermediate Results		Loading Results	
NO3-	5068	NO3-	5049
SO4-	5068	SO4-	5049
Cl-S	5068	Cl-S	5049
Ca-S	5070	Ca-S	5061
Na-S	5071	Na-S	5061
K--S	5071	K--S	5061
NH4-	5071	NH4-	5061
Mg-S	5070	Mg-S	5061

Introduction

A 10.4 cm (4.1") diameter polyethylene canister containing a collection medium is exposed to the ambient air for a period of approximately 30 days. The sample subsequently undergoes gravimetric and/or chemical analysis in the laboratory, followed by a loading calculation.

Method Summary

A portion of filtrate from the Particulate-Total procedure made up to 500 mL is analyzed by Ion Chromatography, then converted to loading units.

MDL

0.1 mg/L for intermediate results

Units

a) Intermediate results: mg/L
b) Loading results: $mg/dm^2/d$

Matrix

Particulate

Principle or Procedure

Analyze an aliquot of prepared sample (see Particulate-Total) by Ion Chromatography in accordance with the procedures for Anions - Ion Chromatography - Precipitation **or** Cations - Ion Chromatography-Precipitation.

Quality Control

A blank should be carried through all steps of the procedure.

Revision History

April 30, 1996:	Initial draft
October 29, 1996:	Procedure vetted by private sector laboratories. Note regarding alternative methods added.
July 11, 1997:	SEAM codes replaced by EMS codes; units correction; term “Dustfall” replaced by “Particulate” on request of E. Tradewell
January 8, 1998:	EMS codes verified; magnesium added.

December 31, 2000:	Minor editing; Supplement #2 merged into main Lab Manual. Also reference in Note 2 changed to current edition of Lab Manual.

Note 1:	**While anions and cations are usually reported for water samples on an elemental basis, for air samples, the convention is to report on an ion weight basis. Thus, ammonia is reported as mg/L and mg/dm^2/d as NH4 and nitrate is reported as mg/L and mg/dm^2/d as NO3.**

Note 2:	**Note that the listed anions and cations may alternatively be analyzed according to any relevant procedure specified in this edition of the BC Environmental Laboratory Manual.**

Particulate - Metals - ICP

Parameters Arsenic, Cadmium, Copper, Lead, Zinc.

Analytical Method Acid Digestion - ICP Analysis.

EMS Code See following page.

Introduction An aliquot of prepared air particulate sample (see the Particulate-Total procedure) is digested by nitric perchloric acid digestion procedure.

Method Summary Following acid digestion, aqueous solutions of metals are converted to aerosols in the nebulizer of the ICP and injected directly into a high temperature plasma (6000 to 8000°K). This highly efficient ionization produces ionic emission spectra at wavelengths specific to the elements of interest which can be monitored either simultaneously or sequentially.

MDL The following MDL concentrations (see table) are extrapolated from aqueous solutions. For instrument and analytical method MDL values, see Section C – Metals. A constant ratio (within rounding) of 11.77 has been used to convert mg/L to $mg/dm^2/d$.

Matrix Ambient Air Particulates

Interferences and Precautions See Section C – Metals, paragraph 2.4.4.

Stability Samples are stable

Procedure Reagents

a) Nitric Acid, Concentrated, analytical
b) Perchloric acid, 70%, analytical

Procedure

a) Place an aliquot of prepared sample (see Particulate-Total, Particulate-Insoluble, and Particulate-Soluble procedures) into a calibrated 75 mL digestion tube, add two mL HNO3 and heat cautiously to oxidize any organic matter; do not take to dryness.

b) Cool, then add 3.75 mL HClO4. Heat until dense white fumes are present. Final conditions are 5% HClO4.

c) Cool and make up to 75 ml with deionized water.

d) Filter through Whatman #41 filter paper and collect the filtrate in a 250 mL polyethylene bottle, and bring to volume (record this volume for calculations).

e) Analyze for As, Cd, Cu, Pb, Zn by ICP by procedures given in Section C - Metals.

f) For particulate metals soluble only step 5 is required.

EMS Codes

Element		**EMS Code (nitric/perchloric acid digestion**	**EMS Code (aqua regia digestion)**	**MDL**
Arsenic - Soluble	Intermediate Loading	**AS-S 5038** **AS-S 5039**	**AS-S 6038** **AS-S 6039**	0.08 mg/L 0.005 mg/dm^2/d
Arsenic - Insoluble	Intermediate Loading	**AS-I 5038** **AS-I 5039**	**AS-I 6038** **AS-I 6039**	0.08 mg/L 0.005 mg/dm^2/d
Arsenic – Total	Intermediate Loading	**AS-T 5038** **AS-T 5039**	**AS-T 6038** **AS-T 6039**	0.08 mg/L 0.005 mg/dm^2/d
Cadmium - Soluble	Intermediate Loading	**CD-S 5038** **CD-S 5039**	**CD-S 6038** **CD-S 6039**	0.004 mg/L 0.0001 mg/dm^2/d
Cadmium - Insoluble	Intermediate Loading	**CD-I 5038** **CD-I 5039**	**CD-I 6038** **CD-I 6039**	0.004 mg/L 0.0001 mg/dm^2/d
Cadmium - Total	Intermediate Loading	**CD-T 5038** **CD-T 5039**	**CD-T 6038** **CD-T 6039**	0.004 mg/L 0.0001 mg/dm^2/d
Copper - Soluble	Intermediate Loading	**CU-S 5038** **CU-S 5039**	**CU-S 6038** **CU-S 6039**	0.004 mg/L 0.0005 mg/dm^2/d
Copper - Insoluble	Intermediate Loading	**CU-I 5038** **CU-I 5039**	**CU-I 6038** **CU-I 6039**	0.004 mg/L 0.0005 mg/dm^2/d
Copper - Total	Intermediate Loading	**CU-T 5038** **CU-T 5039**	**CU-T 6038** **CU-T 6039**	0.004 mg/L 0.0005 mg/dm^2/d
Lead - Soluble	Intermediate Loading	**PB-S 5038** **PB-S 5039**	**PB-S 6038** **PB-S 6039**	0.06 mg/L 0.01 mg/dm^2/d
Lead - Insoluble	Intermediate Loading	**PB-I 5038** **PB-I 5039**	**PB-I 6038** **PB-I 6039**	0.06 mg/L 0.01 mg/dm^2/d
Lead - Total	Intermediate Loading	**PB-T 5038** **PB-T 5039**	**PB-T 6038** **PB-T 6039**	0.06 mg/L 0.01 mg/dm^2/d
Zinc - Soluble	Intermediate Loading	**ZN-S 5038** **ZN-S 5039**	**ZN-S 6038** **ZN-S 6039**	0.01 mg/L 0.001 mg/dm^2/d
Zinc - Insoluble	Intermediate Loading	**ZN-I 5038** **ZN-I 5039**	**ZN-I 6038** **ZN-I 6039**	0.01 mg/L 0.001 mg/dm^2/d
Zinc - Total	Intermediate Loading	**ZN-T 5038** **ZN-T 5039**	**ZN-T 6038** **ZN-T 6039**	0.01 mg/L 0.001 mg/dm^2/d

Calculation

From the results obtained in mg/L from the ICP analysis, select the calculation method appropriate to the reporting requirements.

mg Metal = CV

where: C = mg/L Metal in sample
V = sample volume in liters

Quality Control

To ensure accuracy and precision, quality control blanks, duplicates, and spikes must be incorporated into the analysis scheme. It should be noted that a wide variety of certified reference materials for water are available and are appropriate for soluble particulate metals analysis. Suitable reference materials for insoluble particulates are less available.

References

None listed.

Revision History

April 1, 1996:	Initial draft
October 29, 1996:	Procedure vetted by private sector laboratories; and at their request, a note was added regarding substitution of aqua regia digestion for perchloric acid digestion procedure
January 8, 1998:	SEAM code replaced with EMS code; term “Dustfall” replaced with “Particulate” on request of E. Tradewell; EMS codes confirmed
February 17, 1998:	EMS code for intermediate results revised to eliminate redundant variables; revised MDLs per Dr. D. Jeffery
December 31, 2000:	Minor editing; Supplement #2 merged into main Lab Manual. Reference to 1994 Manual deleted. Also preference for aqua regia digestion over percholric acid digestion noted.

Note: Aqua regia digestion is preferred in place of the nitric/perchloric acid digestion procedure. Note that these different procedures have been assigned different EMS codes.

Particulate - Phosphate

Parameter

Phosphate Total Insoluble
Phosphate Total Soluble

Analytical Method

Dig: Auto Color Ascorbic Acid

EMS Code

	Intermediate Results	Loading Results
Insoluable	**PP-I 5139**	**PP-I 5132**
Soluable	**PP-S 5139**	**PP-S 5135**

Introduction

A 10.4 cm (4.1") diameter polyethylene canister containing a collection medium is exposed to the ambient air for a period of approximately 30 days. The sample subsequently undergoes gravimetric and/or chemical analysis in the laboratory.

Method Summary

The prepared sample (see Particulate-Total procedure) is passed through a 0.45 µm membrane filter. The organic material in the sample undergoes a sulfuric acid persulfate digestion. This oxidizes the organically bound phosphorus to phosphate. The digestion with acid also hydrolyses polyphosphates to ortho phosphate. The ortho phosphate released by digestion and hydrolysis plus the ortho phosphate originally present in the sample is then reacted with ammonium molybdate to form heteropoly molybdophosphoric acid. Finally, the molybdophosphoric acid is reduced by ascorbic acid to a blue coloured complex which is measured colorimetrically at 880 nm. It is to be noted that at the concentration sulfuric acid used in the method, silica does not interfere.

MDL

0.003 mg/L P for intermediate results

Units

a) Intermediate results: mg/L
b) Loading results: $mg/dm^2/d$

Matrix

Particulate

Interferences and Precautions

a) Arsenic at levels above 0.10 mg/ L interferes by producing a blue colour

b) Mercury (II) at levels above 1.0 mg/ L interferes by giving a precipitate in the reducing step

Principle or Procedure

Apparatus

a) Culture tubes , 50 mL
b) Autoclave
c) An automated system (Technicon TrAAcs, or equivalent) consisting of
   1) sampler
   2) manifold
   3) proportioning pump

4) heating bath set at 37° C
5) colorimeter equipped with 30 mm flow cell and 880 nm filters
6) data collection system

Reagents

a) Strong Acid solution: To 600 mL Deionized water, add 150 mL conc H_2SO_4. Cool and add 2 mL conc HNO_3 and dilute to one litre.

b) Potassium Persulfate; reagent grade.

c) Ammonium Molybdate solution: Dissolve 10g ammonium molybdate, $(NH_4)_6MO_7O_{24} \cdot 4H_2O$, in one litre Deionized water. Add 120 mL conc H_2SO_4 a little at time with mixing; cool. Add 0.6 g potassium antimonyl tartrate, $K(SbO)C_4H_4O_6 \cdot {}^1/_2 H_2O$, after first dissolving it in about 30 mL Deionized water. Finally, dilute to 2 litres with Deionized water.

d) Stock Ascorbic Acid solution: Dissolve 4.0 g ascorbic acid, $C_6H_8O_6$, in a mixture of 100 mL acetone and 100 mL Deionized water. Add 4 mL of wetting agent (Levor IV). Store at 4°C and prepare monthly or if signs of discolouration appear.

e) Working Ascorbic Acid solution: Add 20 mL of stock ascorbic acid solution to 100 mL Deionized water. Prepare daily.

f) Background Matrix Solution: Add 30 ml of the strong acid solution to approximately 1.5 L.

g) Stock Phosphate solution (1000 mg/L P): Dissolve 4.393 g pre-dried potassium dihydrogen phosphate, KH_2PO_4, in Deionized water and dilute to one litre.

h) Working Phosphate solution (10 mg/L P): Dilute 10 ml stock phosphate solution to one litre with Deionized water. Preserve by adding 2 mL chloroform and store at 4°C.

i) Standards Phosphate solutions: Suitable aliquots of the working solution are diluted to prepare the appropriate standards (0.02, 0.05, 0.1, 0.25, and 0.5 mg/L P).

Procedure

a) 1) Phosphate Total :
Total phosphate samples are diluted 2:1 just before loading them onto autoanalyzer.

2) Phosphate Total Soluble:
A 50 mL aliquot of the sample from step 6 of procedure TP-S5040 is digested by the total phosphorus digest method. No additional blanks are required here.

b) Regular blanks, standards and quality control samples are digested with these samples.

c) Add 25 mL of sample and standards to 50 mL test tubes.

d) To each add 0.5 mL strong acid solution and 0.1 g potassium persulfate.

e) Autoclave each at 15 psi (121°C) for 30 min. Allow the chamber pressure to drop to atmospheric pressure (without the aid of venting) before removing the samples.

f) Allow to cool and filter, unless the sample is clear.

g) Establish a baseline after all reagents have pumped through and the system is stable.

h) Adjust the gain so that the top standard (0.50 mg/L P) gives a peak height of 80%-95% full scale.

i) Run the sample and standards at 95 per hour on a TrAAcs 800 and 60/hr on an AAII (or equivalent equipment).

j) Monitor baseline drift, sensitivity drift, and carryover, and correct if necessary.

Calculation

The total phosphate concentrations are read directly from the printout, after a calibration curve is prepared from the peak heights obtained with the standard solutions. The sample concentrations are then determined by comparing the sample peak heights with the calibration curve. Baseline drift, sensitivity drift, and carryover corrections are made on the TrAAcs 800 computer system. The final step is a loading calculation.

Precision

Authentic samples at concentrations of 0.1403 and 0.4321 mg/ L P gave coefficients of variation of 1.0 and 1.6% respectively.

Accuracy

An authentic sample at a concentration of 0.3390 mg/ L P gave a relative error of -1.6%.

Quality Control

Each batch should contain a 10% level each of blank and duplicate samples with a minimum of one each per batch.

References

a) J. Murphy and J.P. Riley. Anal. Chim. Acta 27, 31 (1962).

Revision History

April 1, 1996:	Initial draft
October 29, 1996:	Procedure vetted by private sector laboratories.
January 8, 1998:	SEAM code replaced by EMS code: term “Dustfall” replaced by “Particulate” on request of E. Tradewell; EMS codes confirmed; unavailable reference deleted.
February 16, 1998:	EMS code for intermediate results revised to eliminate redundant variables.
December 31, 2000:	Minor editing; Supplement #2 merged into main Lab Manual. Reference to out of print 1994 Manual deleted.

Precipitation - Acidity, Alkalinity, pH

Parameters and EMS Codes	Acidity: Free	**AC-F 5063**
	Acidity to pH 8.3	**AC83 5062**
	Alkalinity Total	**AK-T 5062**
	pH (Rain)	**pH-- 5065**

Analytical Method

Electrometer/Grans Plot.

Introduction

The sample is first titrated for acidity and alkalinity, the Gran's function is calculated, then this procedure is followed by the measurement of several anions and cations by ion chromatography.

Method Summary

A glass electrode, calibrated with a pH 4.10 H_2SO_4 buffer, is used with a digital pH/mV meter to measure sample pH. Acidity is then determined on the same aliquot by titration with µL increments of 0.01N NaOH. The volume of NaOH added to the sample is plotted against the Gran's function, calculated from the readings obtained during the titration (see examples on following pages). Equivalence point for strong acidity is obtained by extrapolating the Gran's functions to the volume axis. Total alkalinity is determined in a similar manner using 0.01N H_2SO_4 .

MDL

Acidity free	0.1 µeq/L
Acidity to pH 8.3	0.1 µeq/L
Alkalinity total	0.1 µeq/L

Matrix

Precipitation (fog, rain, snow, surface water)

Interferences and Precautions

Coating of the electrode with oily or particulate matter and temperature effects are interferences.

Sample Handling and Preservation

Samples are collected with a rain sampler*, and submitted unfiltered and unpreserved. An additional pH sample drawn in a 60 mL syringe may be collected. Sample bottles should be filled leaving no head space, if sample collected from a water body. Samples should be kept at 4°C until analyzed.

***Note: Precipitation depth has EMS code PRED 5066 and MDL 0.0001 m.**

Stability

Samples are unstable due to loss of gases or absorption of atmospheric gases. Titrations should be completed within 72 hours of sampling and as soon as possible after the sample container has been opened.

Principle or Procedure

Apparatus

a) Digital pH meter, with MV scale, readable to at least the second decimal place in the pH mode.
b) Glass electrode, currently using a "low ionic strength" electrode (Radiometer PHC 2701). An equivalent electrode may be used.
c) Magnetic stirrer and stirring bar.
d) Microliter pipettes (e.g. Eppendorf) in sizes 10, 20, 50, 100 µL fixed volumes.

Reagents

a) Standard reference buffers of pH 4.10 and 6.97, low ionic strength buffers from Orion or equivalent buffers.

b) Deionized water, boiled to remove carbon dioxide, and kept covered with limited headspace, as much as possible. Boiled deionized water should be freshly prepared each week, and be used for all reagents.

c) Potassium biphthalate solution (0.005 N) - dry 15 to 20 g of primary standard, $KHC_8H_4O_4$ (100 mesh) at 120°C. Cool in a desiccator. Weigh accurately 1 g to the nearest mg, transfer to a 1 L flask, and dilute to volume with deionized water.

d) Sodium hydroxide (0.01 N) - dissolve 0.4 g NaOH in 1 L distilled water, cool, and filter. Store protected from CO_2. Standardize by differential titration of 40.00 mL $KHC_8H_4O_4$ solution to the inflection point.

Calculate the normality of the NaOH as follows:

$$\text{Normality} = \frac{A \times B}{204.2 \times C}$$

where A = weight of $KHC_8H_4O_4$ in 1 L
B = mL $KHC_8H_4O_4$ in the titration
C = mL NaOH used

Procedure

a) Allow all samples and buffers to reach laboratory temperature within 0.5°C, before analysis. Record laboratory temperature on datasheet.

b) Set the temperature compensator to the temperature of the samples.

c) Make all pH measurements as follows:
   1) Pipette a 40.00 mL aliquot of pH 6.97 buffer solution/or sample into a 50 mL beaker.
   2) Place a magnetic stir bar, carefully cleaned, into the beaker and place the beaker on a magnetic stirring apparatus. Insert the pH electrode into the sample.
   3) Stir the sample slowly for approximately 15 sec.
   4) Turn the stirrer off, allow the pH reading to stabilize (1 min) and record the reading (or make the appropriate adjustment).

d) Set the calibration control with the pH 6.97 reference buffer.

e) Rinse the electrode thoroughly in deionized water.

f) Adjust the slope control using the standard reference buffer pH 4.10.

g) Rinse the electrode thoroughly with deionized water.

h) Measure the pH of a rainfall sample using the procedure in (3) above.

i) Measure the acidity as follows:

1) Stir sample for 15 sec.
2) Turn stirrer off, allow pH reading to stabilize (45 sec) and record reading.
3) Use an Eppendorf pipette to add 10µl standard 0.01 N NaOH; repeat steps (1) and (2).
4) Continue incremental additions of 0.01 N NaOH to establish required titration curves. The capacity of the Eppendorf pipette may be varied as required.

j) After all analyses are completed, store the electrode immersed in pH 4.10 buffer.

Calculations

a) Calculate Gran's functions (Φ) for each point as follows.

<u>Strong Acidity</u>

$\Phi ë = (V_O + V)10^{-pH + C} = (Ve' - V)K1$

where V_O = initial sample vol (40.00 mL.)
V = mL 0.01 NaOH added.
C = arbitrary constant (7)
Ve'= equivalence point (strong acidity)

<u>Free Acidity</u>

$= 10^{-pH}$

b) Plot Gran's function vs. volume of NaOH added (mL). Extrapolate data points representing strong acidity component to the volume axis. Note that a minimum of three points and a correlation coefficient of at least 0.9995 is required for extrapolation.

c) Calculate the strong acidity component as follows:

Strong Acidity (µeq/L) = N•(Ve'/40.00) x 10^6.

where: Ve' = volume axis intercept (mL); and N = normality of the NaOH.

Total Alkalinity is determined by carrying out a procedure which is a mirror image of the procedure for total acidity. Gran's titration is carried out using standard 0.01N H_2SO_4 instead of 0.01N NaOH. Prepare the standard 0.01N H_2SO_4 as follows:

a) Sodium carbonate solution (0.05N) - dry 3 to 5 g primary standard Na_2CO_3 at 250°C for 4 hours and cool in a desiccator. Weigh

accurately 0.1 g to the nearest mg, transfer to a 500 mL volumetric flask, and dilute to volume with deionized water.

b) Standard sulfuric acid (0.01N) - dilute an ampoule of analytical concentrate to 1N with deionized water, then further dilute to 0.01 N. Standardize by potentiometric titration of 20.00 mL 0.05N Na_2CO_3 solution to the inflection point. Calculate the normality of the H_2SO_4 as follows:

$$\text{Normality} = \frac{A \times B}{53.00 \times C}$$

Where A = weight of Na_2CO_3 in one litre
B = mL Na_2CO_3 used in the titration
C = mL H_2SO_4 used

Precision and Accuracy

The precision and accuracy of the pH measurement is ±0.01 pH unit. The acidity procedure yielded mean precision values (expressed as relative standard deviations) of 1.4% for strong acidity on the intervals 24-97 µeq H+/l.

Quality Control

Determine electrode precision by making 10 replicate measurements of a known reference solution. Average of these ten measurements must be within 0.1 pH units of the reference value. The standard deviation of these measurements should be less than 0.03 pH units. Record this data along with electrode reference number in an accumulating database. This test of precision should be carried once every three months, or whenever a new electrode is introduced.

References

a) Standard Methods for the Examination of Water and Wastewater, 18th ed., APHA, AWWA, WPCF, Washington, DC (1992).
b) McQuaker Neil R., Paul D. Kluckner and Douglas K. Sandberg. 1983 “Chemical analysis of acid precipitation: pH and acidity determinations”, Environmental Science and Technology, vol 17, no. 7, July 1983, p. 431 - 435.

Revision History

April 30, 1997:	Initial draft
October 29, 1996:	Procedure vetted by private sector laboratories.
July 9, 1997:	SEAM codes converted to EMS codes; out-of-print references deleted
January 9, 1998:	EMS codes confirmed; edit changes confirmed with E. Tradewell
December 31, 2000:	Minor editing; Supplement #2 merged into main Lab Manual. Reference to out of print manual deleted.

ACIDITY TITRATION EXAMPLE and GRAN FUNCTION CALCULATION

Sample #: ######
Conc. of base: 0.0103 N
Volume titrated 40.0 ml
Total Point: 13

Point	Vol. added	pH	Gran's function
1	0.00	4.780	0.664D+04
2	0.02	4.920	0.481D+04
3	0.04	5.120	0.304D+04
4	0.06	5.410	0.156D+04
5	0.08	5.770	0.681D+03
6	0.10	6.070	0.341D+03
7	0.15	7.200	0.636D+02
8	0.19	8.640	0.175D+04
9	0.21	8.530	0.136D+04
10	0.23	8.870	0.298D+04
11	0.25	9.080	0.484D+04
12	0.50	10.030	0.434D+05
13	0.75	10.310	0.832D+05

Tritration Results

Strong acidity =	19.0 µeq/L
Equivalence point Vol =	0.07
Equivalence point pH =	5.62
d[H+]/dCb =	-.875
Free Acidity =	16.6 µeq/L
Free/Strong acidity:	0.875
Acidity to pH 8.3 =	43.1 µeq/L
Eq. Vol. @ pH 8.3 =	0.17 ml
Weak acidity =	26.5 µeq/L

EXAMPLE OF ALKALINITY TITRATION and GRAN FUNCTION CALCULATION

Sample #: #####
Conc. of acid: 0.0102 N
Volume titrated 40.0 ml
Total Point: 21

Point	Vol. added	pH	Gran's function
1	0.00	7.570	0.607D+02
2	0.02	7.560	0.000D+00
3	0.04	7.380	0.000D+00
4	0.06	7.300	0.000D+00
5	0.08	7.250	0.000D+00
6	0.10	7.180	0.000D+00
7	0.20	6.960	0.441D+02
8	0.40	6.640	0.926D+02
9	0.60	6.360	0.177D+03
10	0.80	6.090	0.332D+03
11	0.90	5.920	0.492D+03
12	0.95	5.820	0.620D+03
13	1.00	5.720	0.781D+03
14	1.05	5.590	0.106D+04
15	1.10	5.450	0.146D+04
16	1.15	5.270	0.221D+04
17	1.20	5.070	0.351D+04
18	1.25	4.880	0.544D+04
19	1.75	4.030	0.390D+05
20	2.25	3.740	0.769D+05
21	2.75	3.570	0.115D+06

Titration Results

Alkalinity = 304.6 µeq/L
Equivalence point Vol = 1.19
Equivalence point pH = 5.09
d[H+]/dCa = 0.703

ACIDITY PLOT FROM EXAMPLE DATA

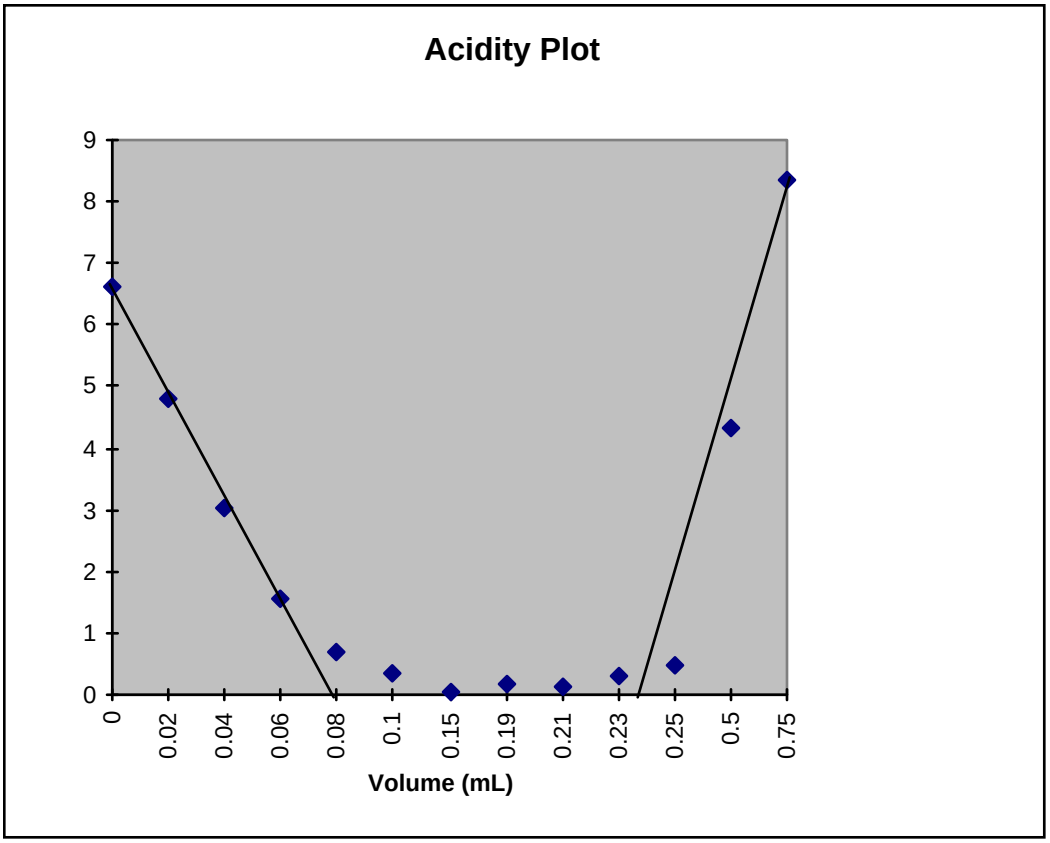

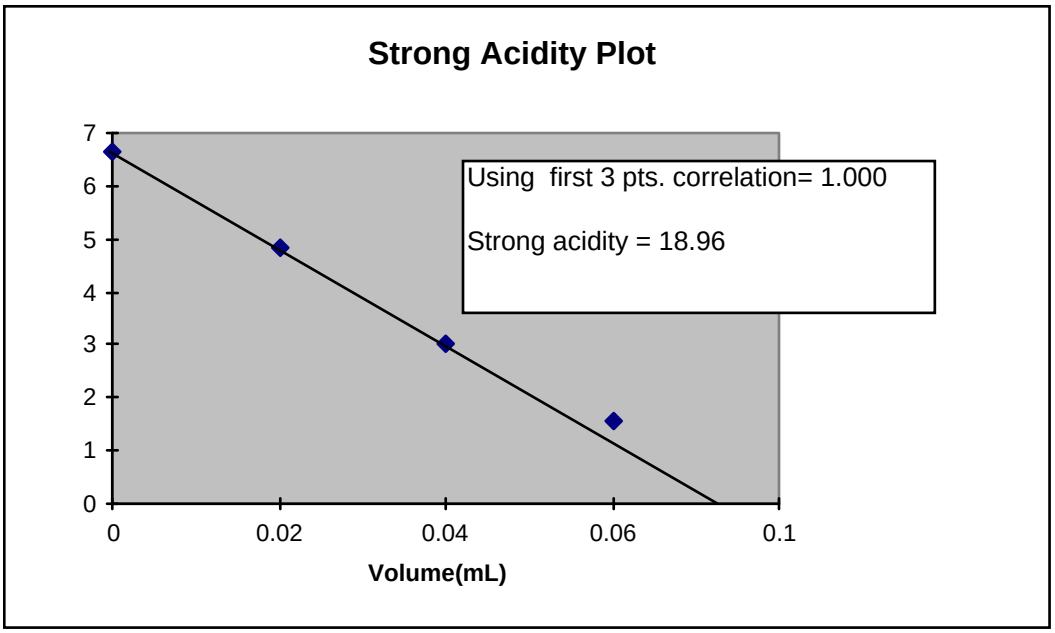

ALKALINITY PLOT FROM EXAMPLE DATA

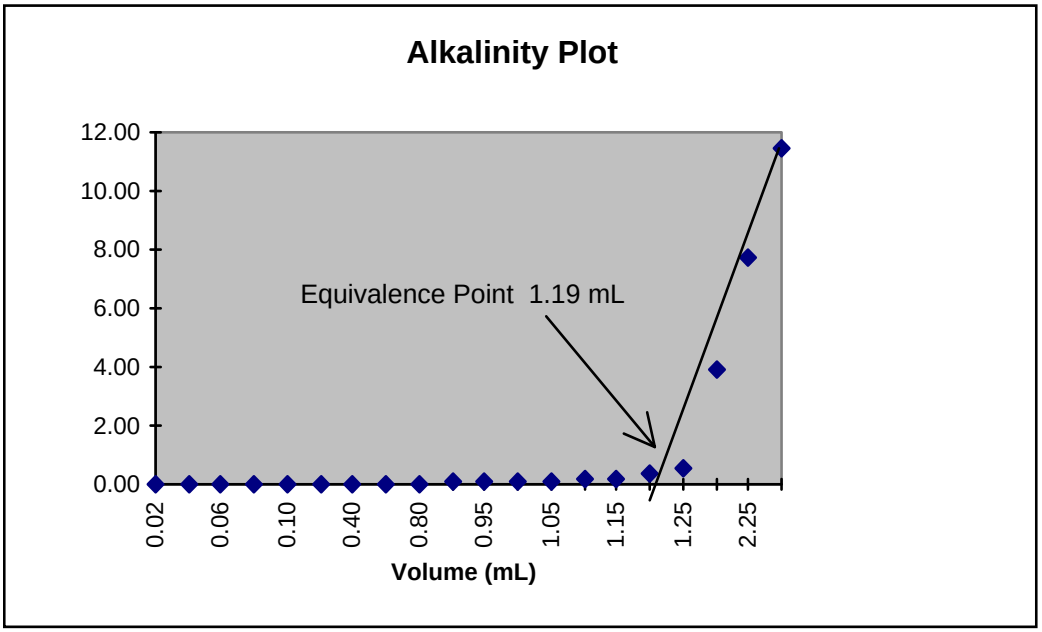

PRECIPITATION CHEMISTRY EXAMPLE REPORT

LABORATORY NAME
LABORATORY ADDRESS
TELEPHONE: (XXX) XXX-XXXX FAX: (XXX) XXX-XXXX

LRTAP MONITORING REPORT: PRECIPITATION

REPORT DATE:	Dec 16/94		
FORM NUMBER:	0	Sampling Time (Start):	Dec 16/94-0000
SAMPLE NUMBER:	94000000	Sampling Time (End):	Dec 16/94-0000

Site: MDC

CATIONS	mg/L	ueq/L	ANIONS	mg/L	ueq/L	OTHER	mg/L
AMMONIUM	<0.01	<0.6	NITRATE	<0.01	<0.2	PHOSPHATE	<0.009
SODIUM	<0.01	<0.4	CHLORIDE	<0.01	<0.3	ALUMINUM	<0.02
POTASSIUM	<0.01	<0.3	FLUORIDE	<0.04	<2.1		
CALCIUM	<0.02	<1.0	SULPHATE	<0.02	<1.6		
MAGNESIUM	<0.02	<1.6	ALKALINITY		-		
FREE ACIDITY	0.1						
TOTAL	0.1						
SUM+ / SUM-							

	ueq/L at equiv. point	mg/L CaC03 equiv.	Approximate pH
STRONG ACIDITY	-	-	-
pH 8.3 ACIDITY	0.0	0.0	-
TOTAL ALKALINITY	-	-	-
pH MEASURED	7.00	-	-

	SAMPLER GAUGE	MOE	AES GAUGE
PRECIPITATION DEPTH (mm)	0.0	-	0.0
COLLECTION EFFICIENCY (%)	-	-	-

COMMENTS:

Precipitation - Anions - Ion Chromatography

Parameters and EMS Codes	Nitrate-Soluble	**NO3- 5068**
	Sulphate-Soluble	**SO4- 5068**
	Chloride-Soluble	**CI-S 5068**

Analytical Method Ion Chromatography-Anion

Introduction Precipitation samples are collected and shipped to the laboratory unpreserved. The sample is first titrated for acidity and alkalinity, the Gran's function is calculated, then several anions and cations are measured. Ion balance is also calculated.

Method Summary An ion chromatograph equipped with a conductivity detector is used to determine several common anions from a single sample injection. Samples and standards are "spiked" with concentrated carbonate / bicarbonate solution to give the sample the same background as the eluent used (avoiding a "water dip" effect). The anions of interest are separated through an anion "guard" and anion "separator" column. An anion micro membrane suppressor following the separator columns is used to reduce the background eluent conductivity by converting the carbonate and bicarbonate species to carbonic acid, while enhancing the conductivity of the ions of interest by converting these ions to there corresponding acids. A conductivity detector senses the sample species in direct proportion to their initial concentration. Note that nitrate is reported as mg NO_3/L and sulphate as mg SO_4/L.

MDL
0.01 mg/L Nitrate
0.01 mg/L Chloride
0.01 mg/L Sulphate

Matrix Water

Interferences and Precautions Interferences can be caused by substances with retention times similar to overlapping those of the ion of interest. Large amounts of an anion can interfere with peak resolution of an adjacent anion. The most common interference is due to extremely high concentrations of dissolved carbonate or weak organic acid.

Principle or Procedure

Apparatus

a) An ion chromatography system consisting of:
   1) selectable eluent supply
   2) high pressure, pulseless pump
   3) sample injection port and sample loop
   4) anion guard and separator columns
   5) anion micro membrane suppressor
   6) conductivity detector
   7) data station

8) auto sampler

Reagents

a) Concentrated Stock Eluent: Dissolve 15.12 g sodium bicarbonate ($NaHCO_3$) and 18.02 g sodium carbonate (Na_2CO_3) with Deionized water into a 1 L flask. Dilute to volume and store in a 1 litre poly bottle.

b) Working Eluent Solution: Dilute 10.0 mL of concentrated stock eluent to 1L in a volumetric flask. (1.8 m<u>M</u> $NaHCO_3$ / 1.7 m<u>M</u> Na_2CO_3) Filter before use.

c) Regenerent Solutions: 0.025 <u>N</u> Sulphuric acid (H_2SO_4) - Dilute 26.8 mL concentrated sulphuric acid to one liter to prepare a 1.00 <u>N</u> H_2SO_4 solution. Dilute 25.0 mL of this solution to one liter.

d) Stock Chloride Standard Solution: Dry 2 to 3 g of sodium chloride (NaCl) at 120°C for 2 hours and cool in a desiccator. Dissolve 1.648 g NaCl in deionized water and dilute to 1.0 liter (1.00 mL =1.00 mg Cl). Store in a poly bottle under refrigeration.

e) Stock Nitrate Standard Solution: Dissolve 1.630 g anhydrous potassium nitrate (KNO_3) in deionized water and dilute to 1liter (1.00 mL = 1.00 mg NO_3). Store in a poly bottle under refrigeration.

f) Stock Sulphate Standard Solution: Dissolve 1.479 g anhydrous sodium sulphate (Na_2SO_4) in deionized water and dilute to 1 liter (1.00 mL = 1.00 mg SO_4). Store in a poly bottle under refrigeration.

Procedure

a) Allow all samples and standards to reach laboratory temperatures before analysis.

b) Establish a constant background conductivity using the following instrument conditions:

Eluent:	0.0018 <u>M</u> $NaHCO_3$ / 0.0017 <u>M</u> Na_2CO_3;
Separator:	4 x 50 Anion Precolumn (Guard) Dionex IONPac®-AG4-SC; 4 x 250 Anion Separator Column Dionex IONPac®-AS4-SC;
Suppressor:	Anion Micro Membrane Suppressor Dionex AMMS-1;
Eluent Flow :	2.0 mL/min.;
Operating Pressure:	900 psi,
Regenerent:	0.025 <u>N</u> H_2SO_4;
Regenerent Flow :	2.0 - 3.0 mL/min.;
Backgrd. Conduct.	12 - 16 µS;
Injection Volume:	25 µL;
Detector Range:	Auto-range

c) Pipette 5.0 mL of each sample or standard solution into a 5 mL autosampler vial (Dionex Polyvial™) , then add 50 µL of concentrated stock eluent. Cap vial with a 0.22 µm filter cap and shake. Load into an autosampler.

d) Run a blank and at least a four point calibration curve of composite standards for each detector range. The calibration curve should include at least one calibration point for each decade of the concentration range. Calibration should be run daily when the analysis is run.

e) Run samples through the chromatograph with standards after every five samples.

Calculations

Calibration curves are programmed into the data station to be read directly off the chromatogram in terms of peak heights and in units of mg/L of anions in the filtrate.

Precision

RSD = 1.18% at 31.0 mg NO_3-N/L (water)
= 1.49% at 98.5 mg SO_4 /L (water)
= 2.89% at 10.0mg Cl/L (water)

Accuracy

100.7% at 31.0 mg NO_3-N/L (water)
104% at 98.5 mg SO_4 /L (water)
98.2% at 10.0 mg Cl/L (water)

Quality Control

a) Record the old and new standard concentrations, along with preparation dates, in a QC record sheet. New standards should be within 5% of old standards, unless previous information suggests old standards have deteriorated. Record this information on QC record sheet as a comment.

b) Record and plot the mid-range check standard run between every fifth sample. Maintain this record in such a manner to allow comparison between runs. If limiting the ions to record, do at least Cl. When sufficient data is recorded, determine control limits. For the interim, control limits of ± 10% should be used.
Note: This is not an independent reference standard. This check is to monitor within run drift.

c) Run an independent reference standard prepared from an alternate salt with addition of flouride, nitrite, bromide, phosphate to check peak resolution and column integrity.

References

a) J.P. Smith, D. Grodjean and J.N. Pitts, J.Air Pollut. Contr. Assoc. 28, 930 (1978).
b) Dionex Corporation,. Basic Ion Chromatography. 1228 Titan Way, Sunnyvale, CA. 94088-3603, U.S.A.
c) Standard Methods for the Examination of Water and Wastewater, APHA, AWWA, WEF, 18th edition, 1992.

Revision History	April 1, 1996:	Initial draft
	October 29, 1996:	Procedure vetted by private sector laboratories. Note regarding alternative methods added.
	July 11, 1997:	Minor editing; replace SEAM code with EMS code
	January 9, 1998:	EMS codes confirmed
	December 31, 2000:	Minor editing; Supplement #2 merged into main Lab Manual. Reference to out of print manual deleted.

Note 1: While anions and cations are usually reported for water samples on an elemental basis, for air samples, the convention is to report on an ion weight basis. Thus, ammonia is reported as mg/L as NH4 and nitrate is reported as mg/L as NO3.

Note 2: Note that the listed anions and cations may alternatively be analyzed according to any relevant procedure specified in this edition of the BC Environmental Laboratory Manual.

Precipitation - Cations - Ion Chromatography

Parameters and EMS Codes	Sodium	**Na-S 5071**
	Ammonium	**NH4- 5071**
	Potassium	**K--S 5071**
	Magnesium	**Mg-S 5070**
	Calcium	**Ca-S 5070**

Analytical Method Ion Chromatography

Introduction Precipitation samples are collected and shipped to the laboratory unpreserved. The sample is first titrated for acidity and alkalinity, the Gran's function is calculated, then several anions and cations are measured. Ion balance is also calculated.

Method Summary An ion chromatograph equipped with a conductivity detector is used to determine several cations from a single sample injection. All samples are filtered through a 0.22 µm fritted glass filter prior to injection. The cations of interest are separated through a cation "guard" and cation "separator" column with a methane sulphonic acid eluent. After the cations are separated they exit at various times from the column in a background of eluent. A self regenerating membrane suppressor is attached to the end of the column to neutralize the acid before detection and form the corresponding hydroxide. Note that ammonium is reported as mg NH_4/L

MDL
0.01 mg/L Na
0.01 mg/L NH_4
0.01 mg/L K
0.01 mg/L Mg
0.01 mg/L Ca

Matrix Water

Interferences and Precautions Interferences can be caused by substances with retention times similar to overlapping those of the ion of interest. Significant concentrations of previously eluted cations may cause masking problems.

Principle or Procedure

Apparatus

a) An ion chromatograph consisting of:
   1) selectable eluent supply
   2) high pressure, pulseless pump
   3) chromatography module
   4) cation guard and separator columns
   5) cation membrane suppressor
   6) conductivity detector
   7) data station

Reagents

a) Methane sulphonic acid stock (2.0 M): Weigh 96.1 g methane sulphonic acid and dilute to 500 mL with Deionized water.

b) Eluent (0.02 M): dilute 10.0 mL of 2.0 M methane sulphonic acid stock to 1L. Filter through a 0.45 um nylon membrane filter.

c) Regenerent solution: deionized water.

d) Ammonium standard 1000 mg/L: Dissolve 2.965 g predried ammonium chloride (analytical grade) in 1 L Deionized water.1mL= 1mg NH_4

e) Calcium standard 1000 mg/L: Dissolve 2.497 g predried calcium carbonate (analytical grade) in 1 L of 400 mN hydrochloric acid.

f) Magnesium standard 1000 mg/L: Dissolve 4.952 g predried magnesium sulphate (analytical grade) in 1 L of 400 mN hydrochloric acid.

g) Potassium standard 1000 mg/L: Dissolve 1.907 g predried potassium chloride (analytical grade) in 1 L Deionized water.

h) Sodium standard 1000 mg/L: Dissolve 2.542 g predried sodium chloride (analytical grade or better) in 1 L Deionized water.

(Note: New standards should always be checked against old stock standards. A log of these comparison results should be maintained).

Procedure

a) Allow all samples and standards to reach laboratory temperature before analysis.

b) Establish a constant background conductivity using the following instrument conditions:

Eluent:	0.020 M methane sulphonic acid
Regenerant:	Deionized water
Separator:	4x50 Cation Precolumn (Guard) Dionex IONPac-CS12 4X250 Cation Separator Column Dionex IONPac-CS12
Suppressor:	Cation Self Regenerating Suppressor Dionex CSRS-1
Eluent Flow Rate:	1.0 mL/min.
Operating Pressure:	900 psi.
Regenerent Flow rate:	10 mL/min.
Regenerent Current:	200 mA
Background Conductivity:	0.5 - 2 uS
Injection Volume:	25 uL

c) Run a blank and at least a four point calibration curve of composite standards for each detector range. The calibration curve should include at least one calibration point for each decade of the concentration range. Calibration should be run daily when the analysis is run.

d) Run samples through the chromatograph with standards after every five samples.

Calculations

Calibration curves are programmed into the data station to be read directly off the chromatogram in terms of peak heights.

Precision

In a laboratory study, authentic samples gave the following coefficients of variations (C.V.):

Cation	Standard (mg/L)	C.V. (%)	Standard (mg/L)	C.V. (%)
Na	0.08	3.7	0.16	3.5
NH4	0.20	1.3	0.40	2.0
K	0.20	1.8	0.40	2.8
Mg	0.10	2.5	0.20	2.7
Ca	0.20	2.8	0.40	1.5

Quality Control

a) Record the old and new standard concentrations, along with preparation dates, in a QC record sheet. New standards should be within 5% of old standards, unless previous information suggest old standards have deteriorated. Record this information on QC record sheet as a comment.

b) Record and plot the mid range check standard run between every fifth sample. Maintain this record in such a manner to allow comparison between runs. If limiting the ions to record, do at least Ca and K. When sufficient data is recorded, determine control limits. For the interim, control limits of ± 10% should be used.
Note: This is not an independent reference standard. This check is to monitor within run drift.

c) Confirm all standards with an alternate salt.

References

a) Standard Methods for the Examination of Water and Wastewater, APHA, AWWA, WEF, 18th edition, 1992.
b) Dionex Corporation,. Basic Ion Chromatography, 1228 Titan Way, Sunnyvale, CA. 94088-3603, U.S.A.
c) Dionex Corporation,. Self-Regenerating Controller Users Guide, Document No.034720, 1228 Titan Way, Sunnyvale, CA. 94088-3603,U.S.A. October 1992.
d) Dionex Corporation,. Installation Instructions and Troubleshooting Guide for the Cation Self-Regenerating Suppressor-1 (4mm), Document No. 034651, 1228 Titan Way, Sunnyvale, CA. 94088-3603, U.S.A. June 1993.
e) Dionex Corporation, Installation Instructions and Troubleshooting Guide for the IONPAC CS12 Analytical Column, Document No.034657, 1228 Titan Way, Sunnyvale, CA. 94088-3603, U.S.A. March 1992.

Revision History	April 1, 1996:	Original draft
	October 29, 1996:	Procedure vetted by private sector laboratories. Note regarding alternative methods added.
	July 13, 1997:	Minor editing; SEAM code replaced with EMS code
	January 9, 1998:	EMS codes confirmed; Ca MDL updated.
	December 31, 2000:	Minor editing; Supplement #2 merged into main Lab Manual. Reference to out of print manual deleted.

Note 1: While anions and cations are usually reported for water samples on an elemental basis, for air samples, the convention is to report on an ion weight basis. Thus, ammonia is reported as mg/L as NH4 and nitrate is reported as mg/L as NO3.

Note 2: Note that the listed anions and cations may alternatively be analyzed according to any relevant procedure specified in this edition of the BC Environmental Laboratory Manual.

Total Particulate - PM10 - HiVol

Parameter

Particulate < 10µm (PM10).

Analytical Method

Part. HiVol Teflon.

EMS Code

PM10 5305

Introduction

A measured volume of ambient air is drawn through an inlet that passes only particles less than 10 µm. The particulate which is collected on a 0.3µm teflon coated borosilicate glass fibre filter constitutes PM10 particulate.

Method Summary

PM10 is the designation for particulate matter in the atmosphere that has an aerodynamic diameter of 10 micrometers (µm) or less. A high volume (HV) PM10 sampler draws a known volume of ambient air at a constant flow rate through a size selective inlet and through one or more filters. Particles in the PM10 size range are then collected on the filter(s) during the specified 24 hour sampling period. Each sample filter is weighed before and after sampling to determine the net weight (mass) gain of the collected PM10 sample.

MDL

2 $\mu g/m^3$

Matrix

Ambient Air Particulate

Interferences and Precautions

Damage to filters (holes), misalignment or leaking gaskets in filter assembly can result in loss of particulate.

Sample Handling and Preservation

Filters are shipped flat in white 10" x 12" envelopes with the opening on the 12" axis. The envelope and filter are both stamped with a unique identifying number. A kraft paper wrapper folded in three on the long axis is also shipped. Filters should NOT be folded before sampling. The shipping envelopes are stamped "DO NOT BEND PRIOR TO USE".

The sampling surface of the filter appears like soft blotting paper. The non-sampling surface has a sheen and appears to be a woven fabric.

For return to the laboratory, filters should be gently folded once along the long axis, with the particulate surface inward. The filter should be placed inside the brown paper wrapper and re-inserted in the same envelope in which it was shipped.

If unable to return filters for analysis within 10 days of sampling, store exposed filters at 4°C or less. Return filters for reweighing within 30 days of sampling.

Stability

Most samples are stable for long periods of time.

Procedure

Apparatus

a) Controlled environment room: temperature 20°C ± 3°C, humidity 30-40% ± 5%(24 hour average).

b) Analytical balance, 5 decimal place.

Reagents

a) Filters: Pallflex TX40HI20WW EMFAB, 8" x 10" (20.3 cm x 25.4 cm), or equivalent.

Procedure

a) Inspect filters for pinholes, tears, lumps, or creases using light box. Any filters with these defects should not be used. Remove any fibres from edge of filter. Do not use any filters that have begun to de-laminate.

b) Gently stamp filters and envelopes with an identification number taking care to keep the number stamp on the outer edge of the filter, not in the sampling area. Stamp impression should be on the glossy under surface of the filter.

c) Equilibrate filters in controlled environment for 72 hours. Note: Teflon coated filters take longer to equilibrate than normal glass fibre filters which can be equilibrated in 24 hours.

d) Pre-weigh the filters, and record in log. Filters may be rolled loosely for weighing if desired.

e) Ship the filters flat in envelopes to the field.

f) On return of filters from field, equilibrate for 72 hours. If necessary, gently remove any insects embedded in the filters with Teflon tipped tweezers. If more than 6 insects are found discard the filter. Recover any dislodged material from the filter using a soft camel hair brush to sweep out envelope. This constitutes part of the sample.

Note any irregularities in the filters at this time. If the following irregularities are found, reject the filter.

1) Hole or tear in filter except if on fold.
2) Sample area misaligned such that sample has been lost (filter misaligned, FMA).
3) Leakage of particulate at margins (gasket leak, margin not clear, MNC).
4) Filter sampled wrong side up.
5) Sampling time less than 18 hours or greater than 30 hours. Enter a comment in the report indicating 'time range failure' (TRF). If filters are explicitly marked "SPECIAL STUDY" other time ranges are acceptable.

If the following irregularities are found, they should be noted on the report but the analysis completed:

1) Marks on surface (MOS) of the filter after sampling.
2) Filter misaligned (FMA) so no margin visible.
3) Sampling surface against envelope, wrapper or time chart .

Record all of the above comments in comment section of the report.

g) Weigh the filters to the nearest 1 mg after equilibration. Record the weight.

h) Archive the filters for a period of 2 years.

Calculation

PM10 Particulate in $\mu g/m^3$ =

$$\frac{\text{(final weight) - (initial weight) x Conversion factor}}{\text{time of exposure, hr.}}$$

where conversion factor = 1000 x 35320 /(40 x 60)

note: 1000 is µg/mg,
35320 is cu ft/m^3 & mg/g
40 is standard flow rate in cu ft/min
60 is min./hr.

Precision

The standard deviation on duplicate weighings of 8" x 10" (20.3 x 25.4cm) teflon filters returned from the field after sampling is 1 mg.

Quality Control

a) Laboratory Equipment:

1) Balance:

i) Initial: 3 to 5 weights in the range of the filter weights should weigh to ± 0.0005 g of nominal weights.

ii) On-going: a standard weight should be weighed daily and every two hours when the balance is in use. Record weights, date, time, and operators initials. Weights should be ± 0.0005 g of nominal weights. Failure requires re-calibration.

iii) Annual calibration and certification of balance by a certified tester.

2) Constant humidity:

i) A reading with a wet/dry bulb sling psychrometer to be taken and recorded every 6 months. Reading to be ± 6% of desired reading.

ii) On-going humidity should be <40% and not vary by more than ± 5%. Record humidity daily. Design humidity is 35%.

3) Temperature should be kept between 15 and 30°C, and should not vary more than ± 3°C. Target temperature is 20°C.

b) Assessment of data accuracy

1) Field duplicates: co-located samplers should give results ± 15%.

2) Lab duplicates: prior to shipping to field, randomly select and re-weigh 4 in every set of 50 un-exposed filters. Record initial weight, re-weight, date and time of each, and initial the record. The re-weigh should be done between 3 and 24 hours after the initial weighing. Re-weigh the entire batch if any re-weighs differ by more than ± 5 mg (0.005 g) from the original weight. Plot an x-bar R chart of data as a control chart. Interim warning limits and control limits ± 3.0 mg and ± 4.5 mg. Out of control points

indicate a need to re-calibrate the balance, improve operation procedure, or failure to control humidity and temperature.

3) Trip duplicates: For every batch of 50 (unexposed) filters, 4 filters, chosen at random, are sent to the field as trip blanks. On return, these unexposed filters are conditioned and reweighed. The re-weigh should be done between 3 and 48 hours after the initial weighing. Re-weigh the entire batch if any re-weighs differ by more than ± 5 mg (0.005 g) from the original weight. Plot an x-bar R chart of data as a control chart. Interim warning limits and control limits ± 3.3 mg and ± 5.0 mg. Out of control points, in absence of out of control points in b. above indicate a lack of proper impaction of particulate in field, a failure to properly handle filters in field or laboratory causing a loosening of particulate, or a need to improve operation procedure.

Samples which fail this test should be recorded as "FAILED DUPLICATE WEIGHT TEST".

References

a) Quality Assurance Handbook for Air Pollution Measurement Systems, Volume II: Ambient Air Specific Methods, EPA/600/R-94/038b, April 1994, Section 2.11.0 (January 1990).

Revision History

April 1, 1996:	Initial draft
October 29, 1996:	Procedure vetted by private sector laboratories.
January 12, 1998:	EMS code confirmed; out of print reference deleted
December 31, 2000:	Minor editing; Supplement #2 merged with main Lab Manual. At request of E. Tradewell, note added regarding storage and return of exposed filters.
November 4 ,2002:	Conditioning criteria (humidity) specs updated

Total Particulate – PM10/PM02 - 47 mm - HiVol

Parameter and EMS Codes	Total Particulate (PM10)	**PM10 5306**
	Total Particulate (PM02)	**PM02 5306**

Analytical Method 47mm HiVol Teflon filter

Introduction A measured volume of air is drawn through a 47 mm filter using a Partisol Model 2000 air sampler.

Method Summary Air particulate is trapped on a pre-weighed Teflon filter. The weight change after sampling is used to calculate the particulate in $\mu g/m^3$.

MDL A detection limit of 6 $\mu g/m^3$ is based on duplicate weighing of triplicates weighings of exposed filters (July - August 1996) returned from the field. This was revised in June 2000 to 2$\mu g/m^3 \pm .6$

Matrix Ambient Air Particulate.

Interferences and Precautions Damage to the filter such as cracks or pinholes that allow particulate to escape during sampling may reduce the reported values. Failure to protect sampling surface during shipment may cause loss of particulate.

Sample Handling and Preservation Use non-serrated forceps to handle filters. Store and transport filters in cassettes housed in petri dishes. On initial use and after each return from field use, filter cassette holders should be rinsed in deionized water, soaked for at least 1 hr. in clean dilute FL70 detergent solution, rinsed with deionized water at least 8 times, and air dried in a dust free environment.

Procedure

Apparatus

a) Pallflex TX40 HI20-WW 47mm filters
b) Cassette filter holder (Partisol series 2000, part #59-002388)
c) Balance, with resolution of 0.01 mg
d) Non-serrated forceps

Procedure

a) Inspect each filter visually for integrity and apply the criteria given in Procedure paragraph 6, of Total Particulate - PM10 - HiVol (EMS code PM10 5305).

b) Equilibrate the 47 mm filters before use as follows:
   1) Label and number both covers of each petri dish .
   2) Place the petri dish cover under the bottom half of the dish.
   3) Place each inspected filter into a separate dish.
   4) Record the filter number, relative humidity, temperature, date and time at the beginning of equilibration.
   5) Equilibrate each filter for at least 24 hours (Teflon filters usually require 72 hours to equilibrate) at a constant humidity 30- 40% ± 5%, and constant temperature of 20°C ± 2°C. The PM02 filters

should be equilibrated at a humidity of 30 - 40 % ± 5% and constant temperature 20° C ± 2° C.

c) Weigh each filter three times, and record its mass in grams. The average of these three weights is the initial weight.

d) Ship the filters to the field in petri dishes.

e) On return of filters from the field, equilibrate for 72 hours and weigh each filter three times, and record its mass in grams. The average of these three weights is the final weight. PM02 filters should be re-weighted within ten days after end of sampling period. If unable to process within this time period store at 4° C or less and re-weigh within thirty days of sampling.

Calculation

Particulate in $\mu g/m^3$ =

$$\frac{1{,}000{,}000 \times (\text{average 3 final weights,g}) - (\text{average 3 initial weights,g})}{\text{time of exposure in hours}}$$

where: 1,000,000 is µg/g and flow rate is 1 m^3/hr

Precision

Standard deviation on duplicate weighings of 47 mm Partisol filters returned from the field after sampling is 2.3 $\mu g/m^3$ for results in range 11 to 66 $\mu g/m^3$. Estimated coefficient of variation is 9%.

Quality Control

a) Balance Weights: record weight of a 1, 2, and 5 g nominal weight Class S weight, initially and every two hours during weighing periods. Limits for acceptance of weights should conform to balance manufacturer's specifications.

b) Prior to shipping filters to field repeat the weighing process for 4 in 50 or 4 in a weighing set (which ever is smaller). Average of triplicate weights initial and repeat weighing must agree to within 1 mg.

c) After return of filters from the field, repeat the weighing process for 4 in 50 or 4 in a set. Average of triplicate weights initial and repeat must agree to within 1 mg.

Reference

a) Quality Assurance Handbook for Air Pollution Measurement Systems Volume II: Ambient Air Specific Methods, PA/600/R-94/038b, April 1994, Addendum 2.11.
b) Operating Manual, Partisol 2000 Air Sampler, p.3-1 to 3-9, Rupprecht and Patachnick, Albany, New York, December 1993, version 1.00.

Revision History

April 30, 1996:	Initial draft
October 29, 1996:	Procedure vetted by private sector laboratories.
January 12, 1998:	EMS codes confirmed
June 24, 1998:	PM02 procedures revised
December 31, 2000:	Minor editing; Supplement #2 merged with main Lab Manual.
November 4, 2002:	Conditioning criteria (temp. & humidity) specs updated

Total Particulate - PM02 - HiVol

Parameter PM 2.5µm HiVol (PM02).

Analytical Method Tot. Part. HiVol-Teflon (8 x 10 filter).

EMS Code **PMO2 5305**

Introduction A measured volume of ambient air is drawn through an inlet that passes only particles less than 2.5 µm. The particulate which is collected on a 0.3 micron teflon coated borosilicate glass fibre filter constitutes PM02 particulate.

Method Summary PM-2.5 is the designation for particulate matter in the atmosphere that has an aerodynamic diameter of 2.5 micrometers (µm) or less. A high volume (HV) PM 2.5 sampler draws a known volume of ambient air at a constant flow rate through a size selective inlet and through one or more filters. Particles in the PM 2.5 size range are then collected on the filter(s) during the specified 24 hour sampling period. Each sample filter is weighed before and after sampling to determine the net weight (mass) gain of the collected PM02 sample.

MDL 2 $\mu g/m^3$

Matrix Ambient Air Particulate

Interferences and Precautions Damage to filters (holes), misalignment or leaking gaskets in filter assembly can result in loss of particulate.

Sample Handling and Preservation

Filters are shipped flat in white 10" x 12" envelopes with the opening on the 12" axis. The envelope and filter are both stamped with a unique identifying number. A kraft paper wrapper folded in three on the long axis is also shipped. Filters should NOT be folded before sampling. The shipping envelopes are stamped "DO NOT BEND PRIOR TO USE".

The sampling surface of the filter appears like soft blotting paper. The non-sampling surface has a sheen and appears to be a woven fabric.

For return to the laboratory, filters should be gently folded once along the long axis, with the particulate surface inward. The filter should be placed inside the brown paper wrapper and re-inserted in the same envelope in which it was shipped.

Stability Conditioned filters shipped from Laboratory should be used within thirty days of preparation date. Filters should be weighted with ten days of sampling date. If unable to process with ten days of sampling, store at 4^0C or less and reweight within thirty days of sampling.

Apparatus

a) Controlled environment room: temperature 20° C ± 2° C. Humidity 30 - 40% ± 5 (24 hour average).

Principle or Procedure	See Total Particulate - PM10 - HiVol.	
Revision History	March 20, 1995:	Initial draft
	October 29, 1996:	Procedure vetted by private sector laboratories.
	January 12, 1998:	EMS codes confirmed; E. Tradewell confirmed filter size
	June 24, 1998:	Updated using new EPA protocols.
	December 31, 2000:	Minor editing; Supplement #2 merged with main Lab Manual.

Total Particulate - Teflon - HiVol

Parameter Particulate: Total

Analytical Method Tot. Part. HiVol Teflon (8 x 10 filter)

EMS Code **TP-T 5305**

Introduction A measured volume of ambient air is drawn through a high volume sampler and is collected on a 0.3µm Teflon coated borosilicate glass fibre filter. The collected material constitutes total particulate.

Method Summary A high volume (HV) sampler draws a known volume of ambient air at a constant flow rate through one or more filters. Particles are then collected on the filter(s) during the specified 24 hour sampling period. Each sample filter is weighed before and after sampling to determine the net weight (mass) gain of the collected total particulate sample.

MDL 2 $\mu g/m^3$

Matrix Ambient Air Particulate

Interferences and Precautions Damage to filters (holes), misalignment or leaking gaskets in filter assembly can result in loss of particulate.

Sample Handling and Preservation Filters are shipped flat in white 10" x 12" envelopes with the opening on the 12" axis. The envelope and filter are both stamped with a unique identifying number. A kraft paper wrapper folded in three on the long axis is also shipped. Filters should NOT be folded before sampling. The shipping envelopes are stamped "DO NOT BEND PRIOR TO USE".

The sampling surface of the filter appears like soft blotting paper. The non-sampling surface has a sheen and appears to be a woven fabric.

For return to the laboratory, filters should be gently folded once along the long axis, with the particulate surface inward. The filter should be placed inside the brown paper wrapper and re-inserted in the same envelope it was shipped in.

Stability Most samples are stable for long periods of time.

Principle or Procedure See Total Particulate - PM10 - HiVol

Revision History	April 11, 1995:	Initial Draft
	October 29, 1996:	Procedure vetted by private sector laboratories.
	January 12, 1998:	EMS codes confirmed; E. Tradewell confirmed filter size
	December 31, 2000:	Minor editing; Supplement #2 merged with main Lab Manual.

Total Particulate - HiVol - Metals - ICP

Parameters

The HiVol metals package now includes a total of 25 metals. See table on following page for EMS codes and for detection limits.

Analytical Method

Strong Acid Digestion; ICP Analysis.

EMS Code

See following page.

Introduction

Either nitric /perchloric acid digestion or aqua regia digestion is used to bring the metals into solution. The metal content is then determined by ICP analysis.

Method Summary

Following acid digestion, aqueous solutions of samples are converted to aerosols in the nebulizer of the ICP and transported to a high temperature plasma (6000 to 8000°K). This excitation source produces atomic and ionic emission spectra at wavelengths specific to the elements of interest which can be determined either simultaneously or sequentially.

MDL

The following MDL concentrations are extrapolated from aqueous solutions at the normal operating conditions. For instrument and method MDL values see Section C - Metals.

Matrix

Ambient Air Particulates.

Interferences and Precautions

The normal field exposure limit is 24 hours. In order to achieve better detection limits longer exposure times may be used. The laboratory requisition should indicate special test, exposure time, so lab staff will accept this data. For further discussion, see elsewhere in this manual.

Sample Handling and Preservation

Do not touch the sampling surface or use talced gloves when handling filters, as this may cause Zn contamination. Unused portions of filters are archived in paper envelopes.

Stability

Samples are stable

Procedure

Apparatus

a) Filter cutter, 4.6 cm diameter, stainless steel

Reagents

a) Nitric Acid, Concentrated, analytical
b) Perchloric acid, 70%, analytical

Table of EMS Codes and Recommended Detection Limits for HiVol metals package
(units = mg/L of digestate, unless shown otherwise**)**

Element		**EMS Code (nitric/perchloric acid digestion**	**EMS Code (aqua regia digestion)**	**MDL**
Silver - Total	Intermediate Loading (24 hr)	**AG-T 5038** **AG-T 5312**	**AG-T 6038** **AG-T 6040**	0.003 mg/L 0.002 ug/m^3
Arsenic - Total	Intermediate Loading (24 hr)	**AS-T 5038** **AS-T-5312**	**AS-T 6038** **AS-T 6040**	0.2 mg/L 0.1 ug/m^3
Boron – Total	Intermediate Loading (24 hr)	**B--T 5038** **B--T 5312**	**B--T 6038** **B--T 6040**	3.0 mg/L 2.0 ug/m^3
Beryllium - Total	Intermediate Loading (24 hr)	**BE-T 5038** **BE-T 5312**	**BE-T 6038** **BE-T 6040**	0.0002 mg/L 0.0001 ug/m^3
Bismuth - Total	Intermediate Loading (24 hr)	**BI-T 5038** **BI-T 5312**	**BI-T 6038** **BI-T 6040**	0.024 mg/L 0.01 ug/m^3
Cadmium - Total	Intermediate Loading (24 hr)	**CD-T 5038** **CD-T 5312**	**CD-T 6038** **CD-T 6040**	0.06 mg/L 0.03 ug/m^3
Cobalt - Total	Intermediate Loading (24 hr)	**CO-T 5038** **C0-T 5312**	**CO-T 6038** **CO-T 6040**	0.003 mg/L 0.002 ug/m^3
Chromium - Total	Intermediate Loading (24 hr)	**CR-T 5038** **CR-T 5312**	**CR-T 6038** **CR-T 6040**	0.02 mg/L 0.01 ug/m^3
Copper - Total	Intermediate Loading (24 hr)	**CU-T 5038** **CU-T 5312**	**CU-T 6038** **CU-T 6040**	0.6 mg/L 0.4 ug/m^3
Manganese - Total	Intermediate Loading (24 hr)	**MN-T 5038** **MN-T 5312**	**MN-T 6038** **MN-T 6040**	0.01mg/L 0.008 ug/m^3
Molybdebum - Total	Intermediate Loading (24 hr)	**MO-T 5038** **MO-T 5312**	**MO-T 6038** **MO-T 6040**	0.004 mg/L 0.002 ug/m^3
Nickel - Total	Intermediate Loading (24 hr)	**NI-T 5038** **NI-T 5312**	**NI-T 6038** **NI-T 6040**	0.02 mg/L 0.01 ug/m^3
Phosphorus - Total	Intermediate Loading (24 hr)	**P--T 5038** **P--T 5312**	**P--T 6038** **P--T 6040**	0.04 mg/L 0.02 ug/m^3
Lead - Total	Intermediate Loading (24 hr)	**PB-T 5038** **PB-T 5312**	**PB-T 6038** **PB-T 6040**	0.5 mg/L 0.3 ug/m^3
Antimony - Total	Intermediate Loading (24 hr)	**SB-T 5038** **SB-T 5312**	**SB-T 6038** **SB-T 6040**	0.14 mg/L 0.09 ug/m^3

Table of EMS Codes and Recommended Detection Limits for HiVol metals package
(units = mg/L of digestate, unless shown otherwise**)**

Element		**EMS Code (nitric/perchloric acid digestion**	**EMS Code (aqua regia digestion)**	**MDL**
Selenium - Total	Intermediate Loading (24 hr)	**SE-T 5038** **SE-T 5312**	**SE-T 6038** **SE-T 6040**	0.02 mg/L 0.01 ug/m^3
Silicon - Total	Intermediate Loading (24 hr)	**SI-T 5038** **SI-T 5312**	**SI-T 6038** **SI-T 6040**	0.11 mg/L 0.07 ug/m^3
Tin – Total	Intermediate Loading (24 hr)	**SN-T 5038** **SN-T 5312**	**SN-T 6038** **SN-T 6040**	0.03 mg/L 0.02 ug/m^3
Strontium - Total	Intermediate Loading (24 hr)	**SR-T 5038** **SR-T 5312**	**SR-T 6038** **SR-T 6040**	0.17 mg/L 0.1 ug/m^3
Tellurium - Total	Intermediate Loading (24 hr)	**TE-T 5038** **TE-T 5312**	**TE-T 6038** **TE-T 6040**	0.02 mg/L 0.01 ug/m^3
Titanium - Total	Intermediate Loading (24 hr)	**TI-T 5038** **TI-T 5312**	**TI-T 6038** **TI-T 6040**	0.07 mg/L 0.04 ug/m^3
Thallium - Total	Intermediate Loading (24 hr)	**TL-T 5038** **TL-T 5312**	**TL-T 6038** **TL-T 6040**	0.03 mg/L 0.02 ug/m^3
Vanadium - Total	Intermediate Loading (24 hr)	**V--T 5038** **V--T 5312**	**V--T 6038** **V--T 6040**	0.005 mg/L 0.003 ug/m^3
Zinc - Total	Intermediate Loading (24 hr)	**ZN-T 5038** **ZN-T 5312**	**ZN-T 6038** **ZN-T 6040**	0.17 mg/L 0.1 ug/m^3
Zirconium - Total	Intermediate Loading (24 hr)	**ZR-T 5038** **ZR-T 5312**	**ZR-T 6038** **ZR-T 6040**	0.006mg/L 0.004 ug/m^3

Procedure

a) Use the filter cutter to remove 2 discs from the HiVol filter, two blank portions from an unexposed filter should be analyzed separately.

b) Add the filter discs to 75 mL calibrated digestion tubes.

c) Add two mL HNO3 and heat cautiously to oxidize any organic matter; do not take to dryness.

d) Cool, then add 3.75 mL HClO4, heat until dense white fumes are present.

e) Cool and make up to 75 mL with deionized water, final matrix = 5% HClO4.

f) Filter through Whatman #41 filter paper and collect the filtrate in a 250 mL polyethylene bottle.

g) Analyze for As, Cd, Cu, Pb, Zn by ICP by procedures given in Section – C.

Calculation: From the results obtained in mg/L from the ICP analysis, select the calculation method appropriate to the reporting requirements.

a) Total µg on digested portion of filter:

$$\mu g = \mu g/mL \times 75\ mL$$

b) Total µg on filter:

$$\mu g = \frac{mg}{L} \times 0.075\ L \times \frac{0.043\ m^2}{0.003322\ m^2} \times \frac{1000\ \mu g}{mg}$$

c) Total $\mu g/m^3$ based on flow rate of the sampler and exposure time of the filter:

$$\mu g/m^3 = \frac{mg}{L} \times 0.075L \times \frac{0.043\ m^2}{0.003322\ m^2} \times \frac{1\ Min.}{1.1355\ m^3} \times \frac{1\ hr.}{60\ Min} \times \frac{1}{\#\ hrs} \times \frac{1000\ \mu g}{mg}$$

or: $\mu g/m^3 = mg/L \times \frac{14.249}{\#hours}$

where: 0.075 L = volume of digestate
$0.043 m^2$ = total area of filter exposed
$0.003322 m^2$ = area of filter analyzed (2 discs 4.6 cm diameter)
1.1355 m^3/Min. = flow rate
hours = number of hours filter exposed.

Accuracy The recovery of Cd, Pb, and Zn from Standard reference filters was 102%, 99%, and 103%, respectively with coefficient of variation of 4, 12 and 2%. The concentration ranges were 1 to 10, 7 to 300 and 10 to 100 µg/filter for Cd, Pb, and Zn.

Quality Control Digest two filter blanks with each batch of 35 or fewer filters, plus two sample filters in duplicate for each batch. Blank results should be less than twice the MDL, otherwise the digestion must be repeated. Duplicate filter digests should agree within ±30%. Blanks and duplicates should be recorded in a database. When sufficient data is available, a duplicate control chart should be constructed for each metal.

References None listed.

Revision History

April 1, 1996:	Initial draft
October 29, 1996:	Procedure vetted by private sector laboratories; and at their request, a note was added regarding substitution of aqua regia digestion for perchloric acid digestion procedure.

January 12, 1998:	EMS codes added and confirmed; minor editing.
March 19, 1998:	Table reformatted for clarity.
December 31, 2000:	Minor editing; Supplement #2 merged with main Lab Manual. Reference to the 1994 Lab Manual deleted. Preference for use of aqua regis digestion noted.

Note: Aqua regia digestion is preferred over the nitric/perchloric acid digestion procedure. Note that these different procedures have been assigned different EMS codes.

Total Particulate – HiVol - Anions - Ion Chromatography

Parameter

Nitrate-Soluble
Sulphate-Soluble
Chloride-Soluble

Analytical Method

Water Extr; Ion Chr.-Anion.

EMS Code

	Intermediate	Loading
Nitrate-Soluble	**NO3- 5068**	**NO3- 5022**
Sulphate-Soluble	**SO4- 5068**	**SO4- 5022**
Chloride-Soluble	**CL-S 5068**	**CL-S 5022**

Units

a) Intermediate results: mg/L
b) Loading results: $\mu g/m^3$

Introduction

Ambient air is sampled on a HiVol air filters (teflon) using the procedure entitled "Total Particulate - Teflon - HiVol".

Method Summary

Discs cut from the HiVol filter are extracted with deionized water and the resulting anions are separated and measured using an ion chromatograph yielding intermediate results with units of mg/L. (See Anions – Ion Chromatography – Precipitation, methods NO3- 5068, SO4- 5068, and Cl-S 5068.) Values are then connected to units of $\mu g/m^3$.

MDL

	Intermediate
Nitrate-Soluble	0.01 mg/L as NO_3
Sulphate-Soluble	0.01 mg/L as SO_4
Chloride-Soluble	0.01 mg/L

Matrix

Ambient Air Particulates

Interferences and Precautions

Interferences can be caused by substances with retention times similar to those of the ion of interest. Large amounts of an anion can interfere with peak resolution of an adjacent anion. Note that unlike water samples, Nitrate is reported on an ion weight basis, i.e., as mg NO_3/L and µg NO_3/m^3.

Principle or Procedure

Apparatus

a) Filter cutter, 4.6 cm diameter
b) Oscillating hot plate
c) An ion chromatography system consisting of:
   1) selectable eluent supply
   2) high pressure, pulseless pump
   3) sample injection port and sample loop
   4) anion guard and separator columns
   5) anion micro membrane suppressor

6) conductivity detector
7) data station
8) auto sampler

Reagents

a) Concentrated Stock Eluent: Dissolve 15.12 g sodium bicarbonate ($NaHCO_3$) and 18.02 g sodium carbonate (Na_2CO_3) with deionized water into a 1.000 L flask. Dilute to volume and store in a 1 liter poly bottle.

b) Working Eluent Solution: Dilute 10.0 mL of concentrated stock eluent to 1.000 L in a volumetric flask. (1.8 mm $NaHCO_3$ / 1.7 m<u>M</u> Na_2CO_3) Filter before use.

c) Regenerent Solutions: 0.025 <u>N</u> Sulphuric acid (H_2SO_4) - Dilute 26.8 mL concentrated sulphuric acid to one liter to prepare a 1.00 <u>N</u> H_2SO_4 solution. Dilute 25.0 mL of this solution to one liter.

d) Stock Chloride Standard Solution: Dry 2 to 3 g of sodium chloride (NaCl) at 140°C for 2 hours and cool in a desiccator. Dissolve 1.648 g NaCl in deionized water and dilute to 1.0 liter (1.00 mL =1.00 mg Cl). Store in a poly bottle under refrigeration.

e) Stock Nitrate Standard Solution: Dissolve 1.630 g anhydrous potassium nitrate (KNO_3) in deionized water and dilute to 1.0 liter (1.00 mL = 1.00 mg NO_3). Store in a poly bottle under refrigeration.

f) Stock Sulphate Standard Solution: Dissolve 1.479 g anhydrous sodium sulphate (Na_2SO_4) in deionized water and dilute to 1.0 liter (1.00 mL = 1.00 mg SO_4). Store in a poly bottle under refrigeration.

Procedure

a) Use a filter cutter to remove 3 discs from the hi vol (teflon) filters.

b) Add the exposed filter discs to a 200 mL. tall plastic beaker.

c) Add 50 mL deionized water.

d) Extract at room temperature for 2 hours, with swirling, using the oscillating hot plate.

e) Filter using Whatman No. 40 filter paper and collect the filtrate into a 100 mL flask.

f) Quantitatively transfer the extract to a 100 mL. volumetric flask and dilute to volume with deionized water.

Determine the anion concentrations according to the procedures for an anion scan given below:

1) Allow all samples and standards to reach laboratory temperatures before analysis.
2) Establish a constant background conductivity using the following instrument conditions:

Eluent:	.0018 M $NaHCO_3$ / 0.0017 M Na_2CO_3
Separator:	4 x 50 Anion Precolumn (Guard) Dionex IONPac®-AG4-SC 4 x 250 Anion Separator Column Dionex IONPac®-AS4-SC
Suppressor:	Anion Micro Membrane Suppressor Dionex AMMS-1
Eluent Flow:	2.0 mL/min.
Operating Pressure:	900 psi
Regenerent:	0.025 N H_2SO_4
Regenerent Flow:	2.0 - 3.0 mL/min.
Backgrd. Conduct:	12 - 16 µS
Injection Volume:	25 µL

3) Pipette 5.0 mL of each sample or standard solution into a 5 mL autosampler vial (Dionex Polyvial™) , then add 50 µL of concentrated stock eluent. Cap vial with a 0.22 µm filter cap and shake. Load into the autosampler.

4) Run a blank and at least a four point calibration curve of composite standards for each detector range. The calibration curve should include at least one calibration point for each decade of the concentration range. Calibration should be run daily when the analysis is run.

5) Run samples through the chromatograph with standards after every five samples.

Calculations

Calibration curves are programmed into the data station to be read directly off the chromatogram in terms of peak heights and in units of mg/L of anions in the filtrate. Subtract blanks before calculations.

a) To convert the results of anions in the filtrate to air sampled.

$$\mu g/m^3 = \frac{mg}{L} \times 0.100\ L \times \frac{0.043\ m^2}{0.003322\ m^2} \times \frac{1\ Min.}{1.1355\ m^3} \times \frac{1\ hr.}{60\ Min.} \times \frac{1}{\#\ hrs} \times \frac{1000\ \mu g}{mg}$$

where: 0.100 L = volume of filtrate
$0.043\ m^2$ = total area of filter exposed
$0.003322\ m^2$ = area of filter analyzed (2 discs 4.6 cm diameter)
$1.1355\ m^3$/Min. = flow rate
hrs = number of hours filter exposed.

Simplified: $\mu g/m^3$ anion X = mg/L x $\frac{18.999}{\#\ hrs}$ anion

b) To convert the results of anions in filtrate to High Vol filters:

mg anion X = CV,

where: C = mg/L anion X in the filtrate
V = 0.100 L of filtrate.

Precision	RSD = 1.18% at 31.0 mg NO_3/L (water) RSD = 1.49% at 98.5 mg SO_4 /L (water) RSD = 2.29 % at 10.0 mg Cl/L (water)
Accuracy	100.7% at 31.0 mg NO_3/L (water) 104% at 98.5 mg SO_4 /L (water) 98.2% at 10.0 mg Cl/L (water)
Quality Control	Digest two filter blanks or reagent blanks with each batch of 35 or less filters, and two sample filters in duplicate for each batch. The filter blanks may be high; therefore data should be blank subtracted. Duplicate filter digests should agree within ± 30%.
References	a) J.P. Smith, D. Grodjean and J.N. Pitts, J.Air Pollut. Contr. Assoc. 28, 930 (1978).

Revision History

April 30, 1996:	Initial Draft
October 29, 1996:	Procedure vetted by private sector laboratories.
July 14, 1997:	Minor editing; MDL code for µg/m3; SEAM code replaced by EMS code; Intermediate EMS codes added
January 12, 1998:	EMS codes confirmed
December 31, 2000:	Minor editing; Supplement #2 merged into main Lab Manual. Units added. Reference to out of print manual deleted.

Note 1: While anions and cations are usually reported for water samples on an elemental basis, for air samples, the convention is to report on an ion weight basis. Thus, ammonia is reported as mg/L and µg/m^3/d as NH4 and nitrate is reported as mg/L and µg/m^3 as NO3.

Note 2: Note that the listed anions and cations may alternatively be analyzed according to any relevant procedure specified in this edition of the BC Environmental Laboratory Manual.

Total Particulate - HiVol - Sodium - Ion Chromatography

Parameter

Sodium - Soluble

Analytical Method

Ion Chromatography – HiVol extrn

EMS Code

a) Intermediate results **NA-S 5318**
b) Loading results **NA-S 5018**

Introduction

Ambient air is sampled on a HiVol air filters (teflon) using the procedure entitled "Total Particulate - HiVol - Teflon"

Method Summary

Discs cut from the HiVol filter are extracted with deionized water and the soluble sodium is determined on an ion chromatograph. The sodium is separated from other ions through a cation 'guard' and cation 'separator' column with a methane sulphonic acid eluent. A self regenerating membrane suppressor is attached to the end of the column to neutralize the acid before detection.

MDL

0.01 mg/L Na (intermediate result)

Units

a) Intermediate result: mg/L
b) Loading: $\mu g/m^3$

Matrix

Ambient Air Particulates

Interferences and Precautions

Interferences can be caused by substances with retention times similar to those of the ion of interest.

Principle or Procedure

Apparatus

a) Filter cutter, 4.6 cm diameter
b) Oscillating hot plate
c) An ion chromatograph consisting of:
   1) selectable eluent supply
   2) high pressure, pulseless pump
   3) chromatography module
   4) cation guard and separator columns
   5) cation membrane suppressor
   6) conductivity detector
   7) data station

Reagents

a) Methane sulphonic acid stock (2.0 M): Weigh 96.1 g methane sulphonic acid and dilute to 500 mL with Deionized water.

b) Eluent (0.02 M): dilute 10.0 mL of 2.0 methane sulphonic acid stock to 1L. Filter through a 0.45 µm nylon membrane filter.

c) Sodium standard 1000 mg/L: Dissolve 2.542 g predried sodium chloride (Analar) in 1 L deionized water.

Procedure

a) Use the filter cutter to remove 3 discs from the hi vol (teflon) filters. Carry two blanks through all steps of the procedure.

b) Add the exposed filter discs to a 200 mL tall plastic beaker.

c) Add 50 mL deionized water and let stand.

d) Filter using Whatman No. 40 filter paper, quantitatively transfer to a 100 mL volumetric flask and dilute to volume with deionized water, and collect the filtrate.

e) Allow all samples and standards to reach laboratory temperature before analysis.

f) Establish a constant background conductivity using the following instrument conditions:

Eluent:	0.020 M methane sulphonic acid
Regenerant:	Deionized water
Separator:	4x50 Cation Precolumn (Guard) Dionex IonPac CG12 4X200 Cation Separator Column Dionex ionPac CS12
Suppressor:	Cation Self Regenerating Suppressor Dionex CSRS-1
Eluent Flow Rate:	1.0 mL/min.
Operating Pressure:	900 psi
Regenerent Flow rate:	10 mL/min.
Regenerent Current:	200 mA
Background Conductivity:	2-6 µS
Injection Volume:	25 µL

g) Load extract into auto-sampler.

h) Run a blank and a four point calibration curve of standard for each detector range.

i) After thirty samples, rerun a new calibration curve.

Calculations

A calibration curve is normally programmed into the data station to be read directly off the chromatogram in terms of peak heights and in units of mg/L of sodium in the filtrate. Subtract blanks before calculations.

a) To convert the results of sodium in the filtrate to air sampled:

$$\mu g/m^3 = \frac{mg}{L} \times 0.100\ L \times \frac{0.043\ m^2}{0.003322\ m^2} \times \frac{1\ Min.}{1.1355\ m^3} \times \frac{1\ hr.}{60\ min.} \times \frac{1}{\#\ hrs} \times \frac{1000\ \mu g}{mg}$$

where:
0.100 = volume of filtrate
0.043 m^2 = total area of filter exposed
0.003322 m^2 = area of filter analyzed (2 discs 4.6 cm in diameter)
1.1355 m^3 = flow rate
hrs = number of hours filter exposed

Simplified: $\mu g/m^3$ Na = mg/L x $\frac{18.999}{\#\ hrs}$ Na

b) To convert the results of sodium filtrate to High Vol. filters:

mg Na = CV,

where:
C = mg/L Na in the filtrate,
V = 0.100 L of filtrate.

Precision

In the ministry's contract laboratory, authentic samples gave the following coefficients of variations (C.V.) 3.7 % at 0.8 mg/L and 3.5% at 0.16 mg/L.

Quality Control

Digest two filter blanks or reagent blanks with each batch of 35 or fewer filters, and two sample filters in duplicate for each batch. The filter blanks may be high; therefore data should be blank subtracted.

References

a) Dionex Corporation. Basic Ion Chromatography, 1228 Titan Way, Sunnyvale, CA. 94088-3603, U.S.A.
b) Dionex Corporation. Self-Regenerating Controller Users Guide, Document No.034720, 1228 Titan Way, Sunnyvale, CA. 94088-3603,U.S.A. October 1992.
c) Dionex Corporation. Installation Instructions and Troubleshooting Guide for the Cation Self-Regenerating Suppressor-1 (4mm), Document No. 034651, 1228 Titan Way, Sunnyvale, CA. 94088-3603, U.S.A. June 1993.
d) Dionex Corporation. Installation Instructions and Troubleshooting Guide for the IONPAC CS12 Analytical Column, Document No.034657, 1228 Titan Way, Sunnyvale, CA. 94088-3603, U.S.A. March 1992.
e) J.P. Smith, D. Grosjean and J.N. Pitts, J. Air Pollut. Contr. Assoc. 28, 930 (1978).

Revision History

April 1, 1996:	Initial draft
October 29, 1996:	Procedure vetted by private sector laboratories. Note regarding alternative methods added.
January 12, 1998:	EMS codes added; minor editing
December 31, 2000:	Minor editing; Supplement #2 merged into main Lab Manual. Erroneous EMS code (for loading) corrected.

Note: Note that the sodium may alternatively be initially analyzed according to any relevant procedure specified in this edition of the BC Environmental Laboratory Manual.

Sulfation Index

Parameter

Sulfation Index.

Analytical Method

Turbidimetric Analysis: Intermediate Result.
Turbidimetric Analysis: Loading Result

EMS Code

a) Intermediate results **SUFI 5000**
b) Loading results **SUFI 5001**

Introduction

A lead oxide plate is exposed to ambient air for a period of 30 days. During this time sulfur dioxide and sulfur trioxide in the are collected by lead oxide as the result of both oxidation and absorption processes and converted to lead sulfate.

Method Summary

The lead oxide plates undergo extractions and the sulfate ion is converted to a barium sulfate suspension under controlled conditions. The resulting turbidity is determined using a spectrophotometer and compared to a curve prepared from standard sulfate solutions.

MDL

0.02 mg SO3/plate or 0.5 mg/L SO3

Units

Intermediate result: mg/L as SO3
Loading result: $mg/dm^2/d$

Matrix

Lead oxide paste

Interferences and Precautions

Care must be taken to ensure that the plates are prepared in a uniform manner and that the paste will adhere to the bottom of the plate.

Sample Handling and Preservation

Plates should be handled with care to avoid dislodging the dried absorbent paste.

Principle or Procedure

Apparatus

a) Test tubes, 23 x 200 mm
b) Vortex mixer
c) UV/visible double beam spectrophotometer
d) Spectrophotometric cells, 5 cm, glass or quartz

Reagents

a) Sulfation Plates:
   1) Add 500 mL 10% ethanol and 5.0 g glass fibre filters to a Waring
   2) blender.
   3) Blend for 1 hour and then add 2.5 g gum tragacanth.
   4) Blend for a further 10 minutes and then add 100 g Lead oxide (PbO_2).
   5) Blend for 10 minutes and then adjust the blending speed so that it is just sufficient to maintain a mixing action.

6) Add 5.0 mL of the prepared suspension to each 48 mm plastic petri dish - approximately 75 plates may be prepared.
7) Dry overnight at 60°C.
8) Add a drop of chloroform to the centre of the plate and apply pressure till dry, to provide adhesion of the material to the petri dish.
9) Place covers on the petri dishes.

b) Sodium phosphate buffer (1000 mg/L with respect to phosphate): dissolve 4.0g Na_3PO_4. 12 H_2O in deionized water and dilute to one litre.

c) Acid reagent: to 100 mL of glacial acetic acid add 30 mL concentrated HCl. Dilute to 200 mL with deionized water.

d) Barium chloride crystal, reagent grade.

e) Stock sulfur solution (100 mg/L S): dissolve 0.5499 g K_2SO_4 in deionized water and dilute to one litre.

Procedure

Note: carry a blank through all steps of the procedure

a) Quantitatively transfer the exposed lead oxide plate to a 250 mL beaker.

b) Add 50 mL buffer solution.

c) Allow to extract overnight and then heat to boiling temperature and hold for 2 minutes.

d) Cool. Filter through Whatman # 40 filter paper and collect the filtrate.

e) Transfer to a 100 mL volumetric flask and dilute to volume with deionized water.

f) Prepare a series of standards (1.0, 2.0, 3.0, 4.0, 6.0, 8.0, 10.0, 12.0 mg/L S) by pipetting 1, 2, 3, 4, 6, 8, 10, 12 mL of stock solution into 100 mL volumetric flasks and diluting to volume. Also prepare a reagent blank.

g) Pipette 25.0 mL sample, standard and blanks into 24 x 200 mm test tubes.

h) Add 2.0 mL acid reagent.

i) Mix on a Vortex mixer.

j) Add 0.5 g Barium Chloride crystals.

k) Cover the tubes with Parafilm®.

l) Mix on Vortex mixer to dissolve the barium chloride.

m) Allow to stand for 30 minutes and then invert 6 times. Immediately read the absorbance of the solutions at 420 nm using 5 cm cells.

Calculation

Prepare a calibration curve from the readings of the standard solutions. Determine the concentration of sulfur in the samples by comparing the "sample - blank" reading with the calibration curve.

mg SO_3 = 2.5 CVF

where: C = mg/L Sulphur in extract,
V = litres extract as diluted,
F = reactivity factor for lead oxide.

Precision

A study of replicate plates exposed to ambient air for intervals of 14 to 21 days gave a relative standard deviation of 5.2 %.

Quality Control

Carry a reagent blank and an unexposed plate through all steps of the procedure.

References

a) N. A. Huey, J. Air Poll. Contr. Assoc. 8, 610 (1968).
b) A. J. Lynch, N. R. McQuaker, & M. Gurney. Environ. Sci. and Technol. 12, 169 (1978).

Revision History

April 1, 1996:	Initial draft
October 29, 1996:	Procedure vetted by private sector laboratories.
January 13, 1998:	Minor editing and EMS codes confirmed.
February 16, 1998:	Revision of EMS codes to eliminate redundant code for intermediate results; MDLs updated.
December 31, 2000:	Minor editing; Supplement #2 merged into main Lab Manual.

Fluoridation Index

Parameter Fluoridation Index**.**

Analytical Method Specific Ion Electrode (Intermediate results)
Specific Ion Electrode (Loading results)

EMS Code
a) Intermediate results **FLRI 5003**
b) Loading results **FLRI 5004**

Introduction A calcium oxide plate is exposed to ambient air for a period of 30 days. During this time fluoride in the ambient air is collected as calcium fluoride.

Method Summary The plates undergo an extraction and the fluoride which is isolated is determined using the selective ion electrode procedure.

MDL Intermediate results: 0.1 mg/L F
Loading results: 0.05 µg/dm^2/d

Matrix Calcium oxide paste

Interferences and Precautions The plate extract may suppress the response of the ion selective electrode, to correct for this results are calculated by 3 point standard addition method.

Sample Handling and Preservation Plates should be handled with care to avoid dislodging the dried absorbent paste.

Stability Expected to be stable

Precision A study of replicate plates exposed to ambient air for intervals of 14 to 21 days gave a relative standard deviation of 5.9%.

Principle or Procedure

Apparatus Expanded scale digital ion analyzer fitted with a double junction reference electrode and a fluoride selective ion electrode.

Reagents
a) Fluoridation Plates:
1) Add 500 mL deionized water and 5.0 g glass fibre filters to a Waring Blender
2) Blend for 1 hour and then add 50 g of calcium oxide
3) Blend for a further 10 minutes and then adjust the blending speed so it is just sufficient to maintain mixing action
4) Add 3.5 mL of the prepared suspension to a 48 mm plastic petri dish. Approximately 100 plates may be prepared
5) Dry overnight at room temperature
6) Add a drop of chloroform to the centre of each plate and apply pressure until dry, to provide adhesion of the material to the plate

7) Place the covers on the petri dishes
8) Retain at least four plates from each batch to be used as blanks

b) Hydrochloric acid, concentrated.

c) Hydrochloric acid, 6N: Dilute 500 mL of concentrated HCl to 1 L with deionized water.

d) Sodium hydroxide 6N: Dissolve 240 g NaOH in deionized water and dilute to 1 L with deionized water.

e) Total ionic strength adjustment buffer (TISAB): Dissolve 116 g of sodium chloride in approximately 1 L of deionized water. Add 114 mL of glacial acetic acid and 50 mL of CDTA stock solution. Adjust the pH to 5.8 by adding 10N sodium hydroxide. Adjust to volume with deionized water, in a 2 L volumetric flask.

f) CDTA Stock Solution: dissolve 36 g of CDTA (1,2 cyclohexylenediamine tetra acetic acid) in 200 mL of 1 N NaOH.

g) Fluoride solution I (1000 mg/L F): dissolve 2.210 g of anhydrous NaF in deionized water and dilute to 1 L.

h) Fluoride solution II (50 mg/L): dilute 50 mL fluoride solution I to 1000 mL with deionized water.

i) Stabilization solution: dissolve 0.5 g gum arabic in 100 mL 1 + 1 glacial acetic acid, and filter. Keep refrigerated.

Procedure

a) Quantitatively transfer the exposed Calcium oxide plate to a 150 mL polyethylene beaker.

b) Use deionized water to adjust the final volume to about 40 mL and then add 1.0 mL concentrated HCl. Also prepare at least two blank unexposed plates in the same manner as the sample.

c) Allow to extract overnight.

d) Use 6 N HCl or 6 N NaOH as required to adjust the pH to slightly acidic. Adjust volume to 50 mL.

e) Pipette two aliquots of sample and spike with 0.5 mL and 1.0 mL respectively with fluoride solution II. (0.5 mg/L and 1.0 mg/L).

f) Add TISAB in 1:1 ratio with sample.

g) Analyze the samples and the above spiked samples using a fluoride selective ion electrode.

h) Calculate the result from the spike additions and the raw fluoride results. Results should be blank corrected.

Quality Control

Carry at least two blank unexposed plates and a reagent blank through all steps of the procedure.

References

a) A.J. Lynch, N.R. McQuaker and M. Gurney, Environ. Sci. Technol. 12, 169 (1978).

Revision History

April 1, 1996:	Initial Draft
October 29, 1996:	Procedure vetted by private sector laboratories.
January 13, 1998:	Minor editing; EMS codes verified.
March 20, 1998:	Revision of EMS code to eliminate redundant variable for intermediate results.
December 31, 2000	Minor editing; Supplement #2 merged with main Lab Manual.

Extracted by: _____

FLUORIDATION PLATES

100mL of samples that includes 50 mL TISAB

Date Extracted _____

units: mg/L except where show otherwise

Sample Number	Raw Result	0.5 mg/L Spike Result	1.0 mg/L Spike Result	Days of Sampling	Average Percent Recovery	Concentration Standard Additions	Blank correction mg/L	Final Result, from ug
								unit correct:
Blank A	0.217	0.594	1			0.282	average	mg/l x1000 ug/mg x0.05
spike recovery		75%	78%		77%		0.329	gives ug per plate.
Blank B	0.291	0.645	1.13		Avg. blank	0.376		
spike recovery		71%	84%		77%			
sample #26672	0.656	1.14	1.7			0.652	0.323	16.14
spike recovery		97%	104%		101%			
sample #28210	0.403	0.872	1.44			0.408	0.079	3.94
spike recovery		94%	104%		99%			
								Corrections for days of sampling not shown since data not available

APPENDIX G – DUST COMPLAINT MANAGEMENT FORM

APPENDIX – DUST COMPLAINT MANAGEMENT FORM

DUST COMPLAINT MANAGEMENT TRACKING	
Incident #	
FSD personnel completing form	
Name:	
Title:	
Date:	
Complainant information	
Resident location:	
Resident name:	
Resident phone #:	
Resident email address:	
Date and time complaint received:	
Reason for the complaint (visual / cosemetic or health related)	
Source and timing of dust	
Date and time of dust occurrence:	
Specific nature of complaint / source of dust:	
Onsite / rail traffic activities at time of complaint:	
Anemometer data at the time of the complaint:	
General weather conditions during the time of the complaint	
Opacity reading when the complaint was received	
Particulate matter monitoring readings when the complaint was received	
Investigative actions	
Investigations of dust source:	

DUST COMPLAINT MANAGEMENT TRACKING	
Anemometer / weather data at the time of the investigation:	
Resolution	
Actions taken (where feasible) to eliminate future occurrences:	
Follow up with resident :	
Status post follow up (resolved to resident satisfaction Y/N):	
Date file closed:	