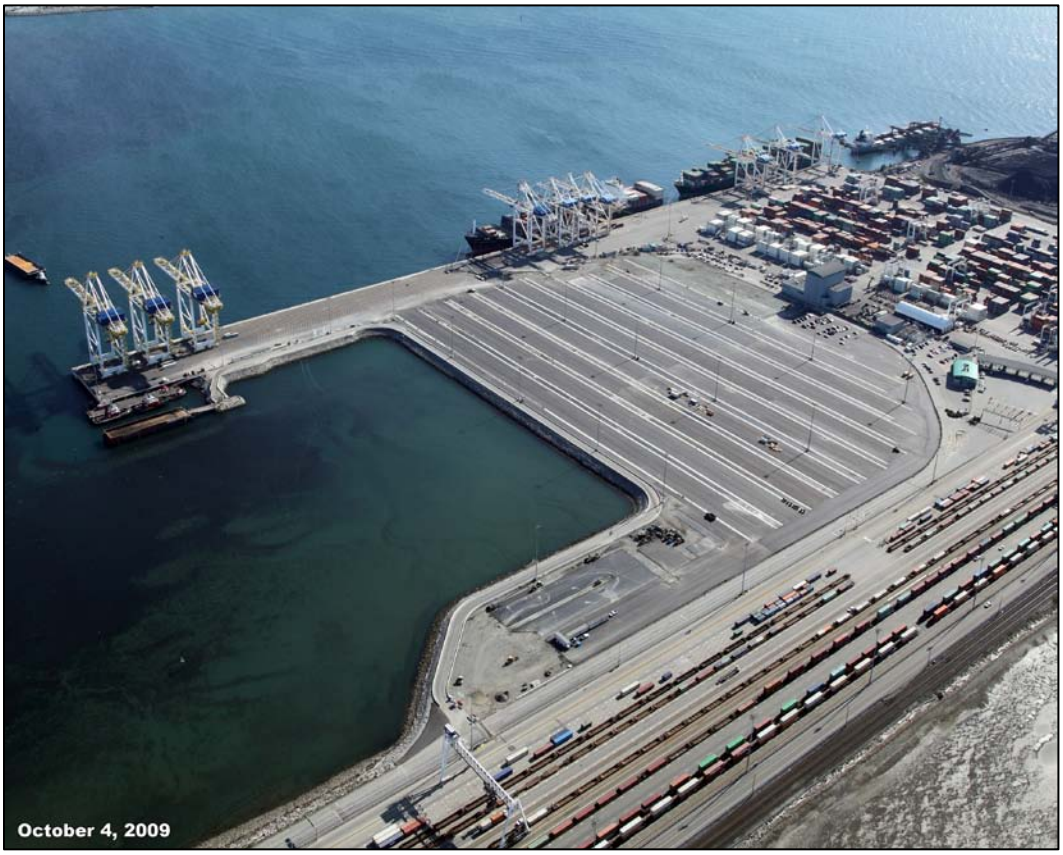

PORT METRO VANCOUVER

OPERATIONS ENVIRONMENTAL ASSESSMENT CERTIFICATE COMPLIANCE REPORT DELTAPORT THIRD BERTH

Prepared for:
BRITISH COLUMBIA ENVIRONMENTAL ASSESSMENT OFFICE
1st Floor, 836 Yates Street
Victoria, BC V8W 9V1

Prepared by:
VANCOUVER FRASER PORT AUTHORITY
100 The Pointe, 999 Canada Place
Vancouver, BC V6C 3T4

January 2011

TABLE OF CONTENTS

List of Appendices

LIST OF ACRONYMS

AMS	Adaptive Management Strategy
BCRC	BC Rail Company
COD	Corporation of Delta
CEAA	Canadian Environment Assessment Act
CWS	Canadian Wildlife Services
DCL	Deltaport Constructor's Limited
DCLC	Deltaport Community Liaison Committee
DFO	Department of Fisheries and Oceans
DP3	Deltaport Third Berth Project
EAC	Environmental Assessment Certificate
EAO	Environmental Assessment Office
EC	Environment Canada
EMP	Environmental Management Plan
EWP	Environmental Work Plan
FTI	Foreshore Technologies Inc.
MMMP	Marine Mammal Monitoring program
MOE	Ministry of Environment
MOT	Ministry of Transportation
RBRC	Roberts Bank rail corridor
RTGs	rubber tire gantries
SAC	Scientific Advisory Committee
TFN	Tsawwassen First Nation
TOCA	Table of Owner’s Commitments and Assurances
TSI	Terminal Systems Inc.
VFPA	Vancouver Fraser Port Authority

1.0 INTRODUCTION

This document has been prepared to provide the British Columbia Environmental Assessment Office (EAO) with the status of the compliance with the Conditions of the Environmental Assessment Certificate (EAC #T06-01) issued to Vancouver Fraser Port Authority (VFPA) September 28, 2006 for the Deltaport Third Berth Project (DP3). As per condition 5 of the EAC, VFPA is required to submit a report documenting the status of compliance with the EAC one year after the start of operations. In February 2008, VFPA provided the EAO with a report on the status of key DP3 components which covered the start of construction up until December 31, 2007 ("*VFPA Deltaport Third Berth 2007 Status Report"*, Feb 2008), and in November 2009, VFPA provided the EAO with a report on the status of compliance covering the period from January 2008 and November 2009 ("*Port Metro Vancouver, Pre-Operations EAC Compliance Report, Deltaport Third Berth*", Nov 2009). Both reports are available on the EAO website at http://a100.gov.bc.ca/appsdata/epic/html/deploy/epic_project_home_212.html. This operations report covers the period from December 2009 to December 2010. All status updates are provided in the updated Table of Owner's Commitments and Assurances (TOCA) (see **Appendix A**) however, key components of the TOCA are highlighted in this report and include the following:

- Construction Environmental Management Plans;
- Operation Environmental Management Plan;
- Marine Mammal Monitoring;
- Adaptive Management Strategy;
- Consultation;
- Traffic, Lighting and Noise; and
- Fisheries Act Authorization.

1.1 PROJECT DESCRIPTION SUMMARY

DP3 is a VFPA and Terminal Systems Inc. (TSI) initiative to expand existing container operations at the Deltaport container terminal at Roberts Bank, in Delta, BC.

The main on-site project components include:

- a wharf to accommodate the third berth;
- creation of land for a container storage yard;
- tug moorage and safety boat launch;
- ship access channel; and
- terminal services and infrastructure.

The main off-site project components include:

- additional rail track; and
- road improvements.

DP3 has increased capacity at Deltaport by at least 600,000 TEUs (twenty-foot equivalent units) by adding a third berth and 20 hectares of container storage facilities to the pre-existing two-berth container terminal. The third berth at Deltaport is operated by TSI, a private company that also operates the two pre-existing berths at Deltaport container terminal. DP3 is part of VFPA's overall strategy to expand container capacity to accommodate consumer and business-driven demand for increased Canadian trade through the west coast of Canada (VFPA website, 2009).

The DP3 project was the subject of environmental assessments under the *B.C. Environmental Assessment Act* (BCEAA) and *Canadian Environmental Assessment Act* (CEAA). Both assessment processes were harmonised under the federal / provincial agreement, and the federal review was a Comprehensive Study. The project was approved under both these legislation in 2006.

1.2 CONSTRUCTION SUMMARY

Following the December 8, 2006 award of the Deltaport Third Berth Marine Works contract to Deltaport Constructor's Limited (DCL), marine construction on DP3 began in January 2007 with dredging and marine works, and achieved Substantial Completion on June 23, 2009.

The Uplands portion of the Third Berth construction, including terminal utility installation and pavement surfacing, was overseen by TSI, Deltaport Terminal Operator. Installation of terminal utilities commenced September 2008 and was completed in August 2009. Asphalt surfacing of the terminal area began in May 2009 and was completed in November 2009.

A summary of key construction milestones was included in the November 2009 Compliance Report referenced above.

1.3 OPERATIONS

The Deltaport Third Berth opened for business in January 2010. Operational activities at the terminal include loading and unloading of container ships, container storage and container transfers to and from rail and road transport. While these activities are the same as the activities conducted at Deltaport prior to the construction of the third berth, the addition of the third berth has increased the capacity and increased the container storage facilities at the terminal (within the capacity levels specified in the Environmental Assessment documents).

Although the third berth has already been operational for one year, TSI continue to optimize activities at the facility. In addition, although TSI has fulfilled its commitments related to the construction and operation of the third berth, TSI continues to work with VFPA and the community to address on-going

community concerns, particularly related to lighting and noise. Specifically, TSI completed the re-aiming of light fixtures to reduce offsite light migration, and continues to work with container lines to mitigate vessel noise.

2.0 PROGRESS IN MEETING CONDITIONS OF EAC #T06-01

As part of its environmental assessment report on the Deltaport Third Berth Project, the EAO issued the Owner's Table of Commitments and Assurances (TOCA; Appendix E of the report), a series of commitments to responsible environmental management and other measures. Since 2007, the VFPA has voluntarily provided updates on the status of the TOCA to the EAO, Deltaport Community Liaison Committee (DCLC) and the public via VFPA's website, as they became available. During the construction phase of the project, these updates were provided on a quarterly basis, with semi-annual updates provided for the first year of operations. This status report distribution has been an effective communication tool to provide interested parties with Project information and aid in transparency of the Project. The current status update of the TOCA January 31, 2011 is included in this report as **Appendix A** and key areas of the TOCA are highlighted in the following sections.

2.1 CONSTRUCTION ENVIRONMENTAL MANAGEMENT PLAN S

Detailed information regarding the construction environmental management plans for the DP3 project was provided in the November 2009 *Pre-Operations EAC Compliance Report*, and a synopsis is also provided in the TOCA provided as Appendix A of this report. In addition to the plans previously discussed, a construction environmental management plan was also produced and implemented for the East Causeway Habitat Compensation works. This document is titled *Roberts Bank East Causeway Habitat Compensation Project, Construction Environmental Management Plans*, and is dated August 2009. A copy of this plan is provided as Appendix B of this report. More detail regarding the East Causeway Habitat Compensation project is provided in Section 3.1 of this report.

2.2 OPERATION ENVIRONMENTAL MANAGEMENT PLAN

Prior to the start of third berth operations, TSI, the Terminal Operator, updated their Operation Environment Management Plan (EMP), including the Emergency Response Plan, to include the new berth at Deltaport. A copy of the draft EMP was provided with the November 2009 Pre-Operations Compliance Report. The EMP is designed to capture, organize and manage activities at the terminal so that a consistent approach for controlling environmental risks can be implemented. Through the EMP, environmental management has been integrated into routine planning processes and daily terminal operations. The EMP is a living document, and will be reviewed on an annual basis. The next review of the EMP will be conducted in January 2011. Any revisions or changes to process and procedures will be documented and forwarded to VFPA for information purposes.

2.3 MARINE MAMMAL MONITORING

An overview of the DP3 Marine Mammal Monitoring program was provided in the November 2009 Pre-*Operations EAC Compliance Report*.

In 2008, partway through Project construction and after the implementation of the DP3 Marine Mammal Monitoring program, Roberts Bank and the Deltaport area were designated as southern resident killer whale critical habitat under the *Species at Risk Act* (*SARA*). As a result, clean up dredging works at Deltaport in 2009 and 2010 were conducted following advice provided by DFO and the SARA Recovery Team for Killer Whales. Mitigation measures were implemented during dredging activities to avoid disturbance to killer whales, including having a DFO approved marine mammal observer maintain constant observations for marine mammals within 1,000 m of the work area. No killer whales were observed during dredging works in 2009 or 2010.

2.4 ADAPTIVE MANAGEMENT STRATEGY

Section 5 of the TOCA (**Appendix A**) outlines the requirement for an Adaptive Management Strategy (AMS) to be developed and implemented for the inter-causeway marine and wildlife habitats at the site. The AMS is a science-based approach to monitoring and managing the Roberts Bank ecosystem. The approach will allow for the early detection of changes in the inter-causeway ecosystem so that potential significant negative ecosystem trends that are attributable to the DP3 Project can be prevented or mitigated. The AMS was developed in conjunction with and approved by Environment Canada.

The key areas of study for the AMS are:

1. Geomorphology/Oceanography
2. Surface Water Quality
3. Sediment Quality
4. Eelgrass
5. Other biota (benthic communities, fish, birds)

A Scientific Advisory Committee (SAC) was established in 2007 as a component of the AMS to provide scientific and technical advice and recommendations regarding the implementation of the AMS. Three scientists have been appointed to the SAC – one appointed by VFPA, one appointed by EC and a third that was jointly appointed by VFPA and EC. Information regarding each of the scientists is available on the Port website[1].

To date, the detailed AMS workplan, quarterly monitoring reports for 2007, 2008, 2009, and the first three quarterly monitoring reports for 2010, and the 2007, 2008 and 2009 Annual Reports have been submitted

[1] http://www.portmetrovancouver.com/projects/ongoing_projects/deltaport_third_berth_project/environment.aspx

to the SAC for review. The 2009 Annual Report was completed in September 2010, and all of the annual reports are available on the Port website[2]. The Annual Reports provide interpretation and discussion of the data that were collected over the course of the year and a discussion of potential trends observed over the course of the AMS monitoring program. The reports also include recommendations for modification of the AMS work program to better investigate identified trends or to reduce the scope of work when no impacts are evident.

The SAC met most recently on December 8, 2010 to discuss the draft first, second and third quarterly reports of 2010, and the upcoming 2010 annual report. The next meeting of the SAC is scheduled for late Winter 2010 to review the fourth quarterly report of 2010.

Based on the results of the first three plus years of monitoring for the DP3 AMS program, to date, it does not appear that the DP3 construction activities have contributed to significant negative ecosystem trends in the inter-causeway area. Additional information can be found in the annual reports or in the 2009 AMS Annual Report summary document, both available on the Port website[3].

2.5 CONSULTATION

Consultation activities undertaken by the VFPA during the Deltaport Third Berth project have been guided by the document titled *Deltaport Third Berth Project: Community Liaison Plan - Construction and First Year Operation Phase*, which was a document prepared by VFPA to provide an overview of DP3 community consultation activities. This guiding document was provided as an attachment to the February 2007 *Deltaport Third Berth Pre-Construction Report*.

The VFPA has now completed a synopsis report on Deltaport Third Berth consultation activities, and that report is titled, *2007-2010 Community Liaison Activities and Input, Deltaport Third Berth*, and is dated January 2011. A copy of this document has been provided as Appendix C of this report.

2.6 TRAFFIC

VFPA remains committed to continuing to work with relevant authorities and parties, including TSI, the COD, and the Ministry of Transportation (MOT) to manage truck traffic issues. Updates on all traffic related commitments are included in the TOCA (**Appendix A**).

TSI has developed a Traffic Management Plan for the operation of the Deltaport facility. VFPA monitors performance of TSI's TMP on a daily basis to ensure that TSI takes appropriate actions as necessary to address traffic problems. In addition, VFPA and TSI have established and co-chair the Delta Container Truck Traffic Working Group (DCTT), which meets monthly to address identified traffic issues. The Terms of Reference was prepared by the DCTT, whose membership includes TSI, VFPA, Corporation of Delta, ICBC, (DCLC – until December 2010), BC Ministry of Transportation & Infrastructure, Delta Police, RCMP

[2] http://www.portmetrovancouver.com/projects/ongoing_projects/deltaport_third_berth_project/environment.aspx
[3] http://www.portmetrovancouver.com/projects/ongoing_projects/Deltaport_Third_Berth_Project/Environment.aspx

& Tsawwassen First Nation. Topics covered by the DCTT include general recommendations, terminal gate congestion, habitat compensation, community issues, and truck operating practices and standards. The DCTT has recently identified the need to promote vehicle driver safety & education, and the need for more intersection cameras to monitor traffic and to detect red-light violations. The DCTT last met in December 2010 and has agreed to continue its work into 2011.

2.7 LIGHTING AND NOISE

Throughout marine and uplands construction VFPA advised the public of Project activities anticipated to increase light and /or the noise environment through Project updates via email and posted to the Project website[4]. A Project information and feedback line has been available to the public throughout the course of the project, and issues and responses have been tracked in the DP3 Public Issues Tracking document, which is publicly available.

VFPA remain committed to working with TSI and the community to address on-going lighting and noise concerns at Roberts Bank, as well as throughout the VFPA's jurisdiction.

[4] http://www.portmetrovancouver.com/projects/ongoing_projects/deltaport_third_berth_project/project_updates.aspx

3.0 HABITAT COMPENSATION

The DFO issued the Fisheries Act Section 35(2) Authorization – Authorization No.: 02-HPAC-PA-000-000144 (the Authorization) on December 19, 2006. Habitat compensation projects completed for the site and reported on in the November 2009 Pre-Operations EAC Compliance Report include the Log Removal and Salt Marsh Restoration project, the Subtidal Reef project, the Caisson Refugia project, and the off-site Rose-Kirkland Island habitat compensation works. In addition, as reported in the November 2009 report, DFO advised the VFPA on October 20, 2009 that it was not approving the Sandbar Stabilization project, and instead VFPA is providing funding for a third party to develop habitat in the Fraser River Estuary. Progress on the East Causeway Habitat Compensation project is discussed below.

3.1.1 East Causeway Habitat Compensation Project

The East Causeway Habitat Compensation Project transformed the eastern part of the Deltaport causeway and part of the adjacent foreshore into diverse fish and wildlife habitat. Baseline work was conducted in 2007, 2008 and 2009 and construction commenced in September 2009. Construction works were substantially complete by the end of September 2010.

Construction works included excavating existing materials, installing slope protection and sheet pile walls, placing fill and growing medium, constructing two pedestrian ramps, planting salt marsh and upland areas, and paving. Works were conducted in the dry during suitable low tides in order to minimize the environmental impact of construction in the foreshore area. This required night work between October 2009 and April 2010. Environmental monitoring was performed regularly throughout the construction period to ensure that works were conducted in accordance with the requirements of the DFO authorization and the *Fisheries Act*.

Habitat features created as part of the East Causeway Habitat Compensation project include open and protected salt marsh, gravel and sand beaches, mud flat, boulder clusters, a cobble seam, and vegetated upland areas. Compensatory habitats were designed to provide protected areas for juvenile fish rearing, stable rock surfaces for colonization of macroalgae and invertebrates, upland areas for herbaceous and shrub vegetation, sand and gravel beaches for forage fish spawning, and crab nursery areas. Monitoring of the compensation habitat will be conducted annually until at least 2017.

Non-intrusive, upland activities such as fence and gate installation, placement of cultural objects, and the potential addition of informational signage in the two pedestrian access areas were not completed as part of the construction works. Completion of these remaining activities is subject to consultation with Tsawwassen First Nation (TFN).

With the exception of the two TFN pedestrian ramp areas, there will be no access to the intercauseway flats. VFPA has advised the public regarding the permanent closure of the east causeway and will work with the local community to identify opportunities to learn about and possibly visit the area.

4.0 CLOSING

This document has been prepared to provide the EAO with a final compliance report for the Deltaport Third Berth project, as required under the Environmental Assessment Certificate. Construction of the Project has been implemented in an environmentally responsible manner, and although this report fulfills VFPA's final reporting requirement, VFPA remains committed to continued work on outstanding commitments.

We trust that this report meets your requirements. Please feel free to contact the undersigned by phone or email regarding any questions or further information that you may require.

Regards,
Vancouver Fraser Port Authority

Carolina Eliasson
Environmental Specialist
604.665.9124
carolina.eliasson@portmetrovancouver.com

Darrell Desjardin
Director, Environmental Programs
604.665.9334
darrell.desjardin@portmetrovancouver.com

APPENDIX A

Owner's Table of Commitments and Assurances – Status Update as of January 31, 2011

Owner's Table of Commitments and Assurances[1]
Status Update as of January 31, 2011

Ref	Objective - Commitments and Assurances	Timing	Delivered By	Approving/ Lead Agencies [2]	Advisory Agencies	Status	Comments
Responsible Environmental Management							
1	*As an overriding objective of responsible environmental management, the Owner shall ensure that an Environmental Management System (EMS) shall be implemented for the Project. The Owner will ensure that the design, construction and operation, including maintenance, of the Project is carried out in an environmentally responsible manner, and will employ Best Management Practices (BMPs [3]) and comply with federal, provincial and municipal statutes, where applicable. The Owner will instruct and advise the selected container terminal operator [4] to abide by all relevant commitments in this Table and as reflected in the EAC [5] .*	Pre-construction, Construction, Operation, Maintenance	VPA, Contractors, Terminal Operator	DFO, EC, EAO **NOTE:** *The agency listing applies to all subsections of a main section, unless otherwise specified.*	FN, MOE, COD, GVRD, FHA, HC		*See comments below.*
1.1	The Owner will ensure that required statutory Permits, Approvals and Authorizations are in place before proceeding with construction.	Pre-construction	VPA	DFO, EC and EAO	FN, MOE, COD, GVRD, FHA, HC	Complete	All required statutory Permits, Approvals and Authorizations were in place prior to proceeding with construction.
1.2	The Owner will prepare or have prepared a Construction Environmental Management Plan (EMP)[6] for the Project as outlined in section 2 below and prior to the start of construction. The Construction EMP will provide contractors and on-site workers with procedures and requirements for meeting Permits, Approvals and Authorizations and for carrying out on-site activities using accepted BMPs and complying with conditions of the EAC.	Pre-construction, Construction	VPA, Contractors, Terminal Operator	DFO, EC and EAO	FN, MOE, COD, GVRD, FHA, HC	Complete	The details of the Construction Environmental Management Plan are contained in Schedule B of the document titled "Fisheries Act S.35(2) Authorization, Authorization for Works or Undertakings Affecting Fish Habitat, Deltaport Third Berth Project", dated December 19, 2007, prepared by Hemmera on behalf of the Port. Construction EMPs were also developed and implemented by contractors for the marine works (Deltaport Constructors Limited) the upland civil works (Trow on behalf of BA Blacktop and MATCON Civil Constructors), and the BCRC Trackwork Extension at Gulf (Trow on behalf of Mainland Civils Works). Additional information related to the EMPs is available in Section 2 of this table.
1.3	The Owner will prepare or have prepared an Operation EMP, as outlined in section 3 below and dealing with environmental management aspects of the longer-term operations and maintenance of the Project. The Owner will ensure compliance with applicable BMPs, as well as with the EAC and with federal, provincial and municipal requirements of the Project.	Operation, Maintenance	VPA, Contractors	DFO, EC and EAO	FN, MOE, COD, GVRD, FHA, HC	Complete	The Terminal Operator has updated their Operations EMP to include the 3rd berth. Additional information on this EMP is available in Section 3 of this table.
1.4	The Owner will ensure that the general content and intention of the Construction and Operation EMPs comply with the listing in section 21.2.1 of the EAC Application.	Construction, Operation	VPA, Terminal Operator	DFO, EC and EAO	FN, MOE, COD, GVRD, FHA, HC	Complete	The marine works Environmental Management Plans (EMP) were reviewed by the VFPA and the EAO working group in early 2007 and accepted as complete. The upland civil works EMPs were reviewed by VFPA and accepted as complete prior to the start of upland construction.
Construction Environmental Management Plan							
2	*The Owner will develop or have developed and implement or have implemented a detailed Construction EMP. The development of this plan is described in the EAC Application (Section 21, pg. 694 onwards).*	Pre-Construction, Operation	VPA, Contractors	DFO, EC, HC	FN, GVRD, MOE, FHA, COD		*See comments below.*
2.1	The Construction EMP shall include the following sub-plans which are further specified in section 2.2 through 2.12 below: - Construction/ Dredging Timing Plan[7] - Surface Water Quality Management and Sediment Control Plan - Hazardous Waste Management and Spill Control Plan· - Health and Safety/Emergency Response Plan· - Waste Management Plan· - Noise Management Plan· - Wildlife and Vegetation Impact Mitigation Plan· - Marine Environment Management Plan· - Marine Water Quality Plan· - Air Quality Impact Mitigation Plan· - Traffic Management Plan	As above	As above	As above	As above	Complete	The details of the *Construction Environmental Management Plan* are contained in the following documents: *"Fisheries Act S.35(2) Authorization, Authorization for Works or Undertakings Affecting Fish Habitat, Deltaport Third Berth Project"*, dated December 19, 2006 and prepared by Hemmera; *"Deltaport Constructors Ltd Project Environmental Management Plan, Deltaport Berth 3 Marine Works"* (DCL EMP), dated January 2007; *"Environmental Management Plan for Terminal Finishing Works, Deltaport Container Terminal, Berth 3 Expansion, Delta, British Columbia"*, dated May 2009 and prepared for BA Blacktop by Trow Associates Inc. (BA Blacktop EMP); *"Project Environmental Management Plan, Deltaport Berth 3 Finishing Works for Terminal Systems Inc."*, dated October 20, 2008 (MATCON EMP); *"Environmental Work Plan for Third Berth Trackwork Extension at Gulf on BCRC Property, Delta, British Columbia"*, dated July 22, 2009 (Mainland EWP); and "Environmental Work Plan, Deltaport Third Berth Trackwork Extension, Grading of Causeway on BCRC Right-of-Way, Delta, British Columbia", dated November 17, 2009 (Trow EWP). Within the *Fisheries Act* Authorization, the EMPs are contained in Schedule B. The implementation of the plans was initiated with the start of marine and upland works, and is on-going through the BCRC trackwork. See subsequent Section 2 subsections for comments and status updates on the individual plans.
2.2	The *Construction/Dredging Timing Plan* shall form the basis for an Application for an EC "Disposal at Sea Permit", and must cover or include information that can be found on EC's website: http://www.ec.gc.ca/seadisposal/main/index_e.htm See also section 28 of this Table.	Pre-Construction (following determination under CEAA)	VPA, Contractors	EC	DFO, TFN, COD, MOE	Complete	The *Construction/Dredging Timing Plan* is contained within Schedule B of the *Fisheries Act* Authorization (02-HPAC-PA1-000-000144, December 2006), within the plan titled Marine Environmental Management Plan. The *Dredging Timing Plan* is also contained within Section 4.1 of the DCL EMP (Jan 2007). The Disposal at Sea permit dated January 2, 2007 was received from Environment Canada after it was gazetted for public comment.

Ref	Objective - Commitments and Assurances	Timing	Delivered By	Approving/ Lead Agencies [2]	Advisory Agencies	Status	Comments
2.3	The *Surface Water Quality Management and Sediment Control Plan* shall be prepared for upland activities, largely associated with construction of additional rail siding from 57B Street to 64th Street. The plan must describe the following:· - Measures to minimize sedimentation of watercourses (ditches), and to prevent the discharge of deleterious substances or debris into the receiving environment; · - Procedures for collection and analysis of water quality samples to ensure that site runoff complies with project-specific requirements identified by regulatory agencies;· - Protocols for regular monitoring, maintenance and repair of sediment control systems to ensure that these systems function effectively under all site conditions;· - Responsibilities of the environmental monitor with respect to plan implementation[8];· - Procedures for immediate notification of the Port's authorized site personnel and/or responsible authorities, in the event of an environmental incident such as discharge of deleterious substance from the project site occurs; and· - Measures taken to address and resolve issues arising from non-compliance with applicable standards, criteria, guidelines and/or approvals to the satisfaction of VPA and the responsible authorities.	Construction	VPA, Contractors	EC, DFO, MOE, COD	GVRD, TFN	Completed and accepted by DFO as part of DFO Authorization (marine works). Completed for upland works.	The Surface Water Quality Management and Sediment Control Plan has been completed and a copy was included within Schedule B of the Fisheries Act Authorization (02-HPAC-PA1-000-000144, December 2006). In addition, contractors have developed separate EMPs for each upland construction phase including the civil upland works (BA Blacktop EMP and MATCON EMP), and BC Rail Trackwork at Gulf (Trow EWP).
2.4	A *Hazardous Waste Management and Spill Control Plan* shall be prepared to describe how the contractor will manage any hazardous waste material generated during Project construction as well as spill control procedures. The plan will describe the following: - Regulatory requirements of the federal Transportation of Dangerous Goods Act and other requirements pertaining to the handling and disposal of hazardous materials and wastes; - Procedures for fuelling of equipment and storage and handling of petroleum products in accordance with all applicable guidelines, legislation, and best management practices;· - Outline a spill prevention, containment and cleanup contingency plan for hydrocarbon products, and all other deleterious substances that may be used in association with the Project. Include a list of appropriate containment and clean up materials to be present on site throughout the construction of the Project.; and· - List of contacts and emergency numbers.	Construction	VPA, Contractors	TC, MOE, EC	GVRD, FHA	Completed and accepted by DFO as part of DFO Authorization (marine works). Completed for upland works.	The *Hazardous Waste Management and Spill Control Plan* has been completed and a copy was included within Schedule B of the *Fisheries Act* Authorization (02-HPAC-PA1-000-000144, December 2006). In addition, this is included within the construction EMP for each construction phase including marine works, civil upland works and BC Rail Trackwork at Gulf.
2.5	Under the direction of the Owner, all contractors will develop a *Health and Safety/Emergency Response Plan* (Plan) for their component of work prior to the start of construction. The Plan would also outline emergency response procedures during construction. Although the primary responsibility for on-site emergency planning and response during construction rests with the contractors, the Owner will ensure that the developed Plans are not only site specific, but also meet all standards, BMP and guidelines applicable to emergency planning and incident response[9]. Local government's emergency services (fire, police, and ambulance) are responsible for operational support to the extent that expertise and resources are available and to the extent that the response functions are within their mandate. The Plan would typically include, but not be limited to:· - Site location and prime contacts;· - Local emergency and Project contact numbers;· - Description and map of emergency routes;· - Safety equipment required;· - List of site hazards and mitigation; and· - Potential waste generation and disposal methods.	Construction	VPA, Contractors	HC, FHA, EC, MOE	GVRD, COD, TFN	Complete	All site contractors and/or consultants are required to submit their health and safety plans to the Port. The health and safety plans for contractors and consultants on site have been accepted. Emergency response procedures are documented within both Schedule B of the *Fisheries Act* Authorization 02-HPAC-PA1-000-000144, December 2006 (*Hazardous Waste Management and Spill Control Plan*) and the DCL EMP (Section 7.0). With respect to BCRC, the Port has been provided with a Final Environmental Work Plan (Trwo EWP) that addresses this commitment.
2.6	A *Waste Management Plan* for construction activities will be prepared and include the following:· - Detail measures to minimize the amount of waste generated; and - Outline how waste and deleterious substances generated by construction of the Project will be appropriately contained by the contractors in the immediate work area, collected, and appropriately disposed of in accordance with all applicable legislation, guidelines, and best management practices (see also section 9 below).	Construction	VPA, Contractors	MOE, COD, FHA	GVRD, EC, HC, TFN	Completed and accepted by DFO as part of DFO Authorization (marine works). Completed for upland works.	The *Waste Management Plan* has been completed and a copy was included within Schedule B of the *Fisheries Act* Authorization 02-HPAC-PA1-000-000144, December 2006, within the *Marine Environmental Management Plan*. In addition, a waste management plan is included within the construction EMP for each construction phase including marine works, civil upland works and BC Rail Trackwork at Gulf.

Ref	Objective - Commitments and Assurances	Timing	Delivered By	Approving/ Lead Agencies [2]	Advisory Agencies	Status	Comments
2.7	A *Noise Management Plan* will be developed to ensure identified mitigation measures are implemented. This plan will include the following: · - Describe procedures for construction activities to meet the intent of Delta Noise Control Bylaw No. 1906, 1972[10] to avoid disturbance of the local community with 24 hour - 7 day per week construction periods. - Set maximum allowable noise emissions for each type of machinery prior to construction to ensure that contractors do not utilize any excessively noisy equipment. - Outline training requirements to ensure construction workers are aware of noise issues and act to minimize noise where possible. - List an environmental helpline and management procedure to deal with noise complaints that may arise from construction activities. Outline procedures to ensure complaints are investigated, and appropriate noise amelioration measures established to mitigate future occurrences. See also section 22 and 23 of this Table.	Construction	VPA, Contractors	COD, HC, FHA	GVRD, TFN	Complete Complete. Implementation on-going.	The *Noise Management Plan* was prepared as a component within the construction EMP for each construction phase including marine works, civil upland works, and BC Rail Trackwork at Gulf. A noise monitoring study was conducted in June and July 2007 to evaluate any changes in construction noise from those predicted in the EA. The assessment concluded that the noise environment did not appear to have changed significantly since noise monitoring conducted prior to the start of Third Berth construction. The draft report was shared with the DCLC noise sub-committee and the DCLC as a whole in June 2009. The Port is reviewing available best management practices for noise from Port Operations and will be assessing their applicability, in consultation with the DCLC Noise Sub-Committee, for the Deltaport Third Berth Project. In addition, the VFPA continues to work with the DCLC and TSI on an on-going basis with regards to community noise concerns. A project information and feedback line is available to the public (604-665-9337). The number is advertised on the project website, project newsletters, project advisory notifications, and is also be available on other collateral material that is produced for the project. All complaints are documented and directed to the appropriate team member. Issues and responses are tracked in the DP3 Public Issues Tracking document, which is available to the public on the project website or in library resource files. In addition, TSI has a 24 hour complaint line for community members to reach the terminal foreman regarding any noise issues.
2.8	A *Wildlife and Vegetation Impact Mitigation Plan* for off causeway rail and road works must be developed by the Owner to ensure identified mitigation measures are implemented. The plan will include the following:· - Procedures to ensure vegetation clearing during construction is kept to a minimum;· - Outline procedures for areas disturbed by construction activities to be re-vegetated with native grass species, thereby enhancing native species in the study area and minimizing the potential for establishment of non-indigenous species. In addition backshore planting plans will be developed to meet the Authorization requirements under section 35(2) of the Canadian *Fisheries Act* for the Project; - Describe protocols to erect fences and silt curtains around the ditch between 57B Street and 64th Street to prevent disturbance to the grassy margins of the ditch, and to limit siltation to aquatic habitats;· - Outline procedures to store and/or dispose of food, garbage and petroleum products in an appropriate manner to prevent attraction of wildlife to construction sites;· - Outline a schedule to undertake construction works in upland areas in the winter months to limit sensory disturbance to wildlife or additional mitigation may apply;· - Outline the procedures to place barn owl nest boxes, through support of environmental stewardship programs, in areas towards Brunswick Point where they are less vulnerable to major motorways; and· - Relevant breeding seasons for:· - Terrestrial mammals and breeding birds March 15 - July 31; and· - Raptors/herons January 01- August 15.	Construction	VPA, BC Rail Company (BCRC), Contractors	EC, MOE, COD, DFO	GVRD, TFN	Complete	An *Environmental Work Plan* (*Trow EWP*) was submitted to VFPA prior to initiation; works were completed by the end of January, 2010. Procedures are addressed within the BCRC *Trow EWP*. The BCRC *Trow EWP* describes procedures for avoiding temporary and unnecessary impacts. Procedures are outlined in the BCRC *Trow EWP (* Figure 3 of Appendix B). This commitment is addressed in the BCRC *Trow EWP* . This is addressed in the BCRC *Trow EWP*. Songbird nesting surveys were not carried out as the work was scheduled (and carried out) in the winter months. Several barn owl boxes have been constructed by VFPA and VFPA is working with SFU on their distribution. Several additional nesting boxes will be constructed in Fall 2010 for distribution prior to the 2011 nesting season. In the future, VFPA may also work with Orphan Wildlife Rehabilitation Society in Delta (O.W.L.) on other stewardship opportunities. The BCRC *Trow EWP* addresses impacts to at-risk terrestrial mammal species. At-risk terrestrial mammal species were not found in a number of local surveys in recent years (since 2004), and the EWP indicates suitable habitat is not present in the work area. The BCRC *Trow EWP* states that its intent is to provide "mitigative measures, BMPs, and monitoring/reporting program requirements for the management of Environmentally Sensitive Areas (ESAs) within the planned construction zone", including for raptor nest sites. It does not further explicitly address raptor or heron nests.
2.9	A *Marine Environmental Management Plan* must be developed by the owner, and applicable to the Project's operational phase as well, to meet the Authorization requirements under sub-section 35(2) of the Canadian *Fisheries Act* for the Project. Project and biota monitoring for the Adaptive Management Strategy. The VPA has submitted a conceptual draft Habitat Compensation Proposal (dated March 12, 2006) to DFO and EC[11], agreed by VPA and DFO/EC to contain satisfactory information and plan details to proceed with determination under CEAA and certification under the Act. The purpose and content of the Marine Environmental Management Plan is outlined in Schedule 1 of this Table.	Construction, Operation	VPA, Contractors, Terminal Operator	DFO, EC	TFN	Completed and accepted by DFO as part of DFO Authorization	The *Marine Environment Management Plan* has been completed and a copy was included within Schedule B of the *Fisheries Act* Authorization (02-HPAC-PA1-000-000144, December 2006). A *Marine Environment Management Plan* is also presented in Section 4.0 of the DCL EMP.

Ref	Objective - Commitments and Assurances	Timing	Delivered By	Approving/ Lead Agencies [2]	Advisory Agencies	Status	Comments
2.10	A Project specific *Marine Water Quality Plan* must be designed by the Owner based on the baseline water quality information to confirm the construction mitigation measures are functioning and no impacts are occurring in the marine environment. The *Marine Water Quality Plan* will form part of the *Fisheries Ac*t Authorization and support the Adaptive Management Strategy for the Project. The plan would:· - Outline procedures for collection and analysis of water quality samples to ensure that marine water quality complies with Project specific requirements identified by regulatory agencies;· - List protocols for regular monitoring, maintenance and repair of sediment control systems to ensure that these systems function effectively under all site conditions;· - Describe the responsibilities of the environmental monitor[12];· - Identify procedures for immediate notification of VPA's authorized site personnel and/or responsible authorities, in the event of an environmental incident such as discharge of deleterious substances from the project site occurs; and· - Identify measures to be taken in order to address and resolve issues arising from non-compliance with applicable standards, criteria, guidelines and/or approvals to the satisfaction of VPA and the applicable regulatory agencies.	Construction	VPA, Contractors	DFO	EC, TFN	Completed and accepted by DFO as part of DFO Authorization (marine works). Completed for upland works.	The *Marine Water Quality Management Plan* has been completed and a copy was included within Schedule B of the *Fisheries Act* Authorization (02-HPAC-PA1-000-000144, December 2006). The *Marine Water Quality Plan* is also presented in the construction EMPs for each project phase including marine works, civil upland works and BC Rail Trackwork at Gulf.
2.11	The Owner will develop an *Air Quality Impact Mitigation Plan* as addressed in Table 20.1 of the Application and further discussed in section 18 of this Table. The Plan will cover but not be limited to:· - The Owner, through the tendering of the Project, will implement air quality initiatives that will be undertaken during construction to reduce emissions to the air wherever possible.· - Use on-road (ultra low sulphur) diesel, where practical for all Project site based equipment that are capable of using such fuels.· - Use diesel particulate filters and/or other appropriate retrofits on construction equipment where possible (such as automatic anti-idling shut-offs).· - Use, where practicable, post 1996 shore based construction equipment and vehicles to reduce emissions of PM, hydrocarbons and nitrous oxides.· - Other measures using best available technology and continuous improvement to reduce air emissions discussed in detail in section 18 of this Table.	Construction	VPA	GVRD	EC, COD, FHA, HC, TFN	Complete	The *Air Quality Impact Mitigation Plan* was prepared as a component of the construction EMPs for each phase including marine works, civil upland works and BC Rail Trackwork at Gulf.
2.12	The Owner will develop a *Traffic Management Plan* as discussed during the Project review. The Plan must reflect other conditions discussed in section 7 of this Table and include:· - The Owner will develop a Plan to reduce the potential for traffic incidents in the local community resulting from construction activities related to the Project. All construction truck traffic, with the exception of materials sourced locally, shall access the site solely via provincial highways rather than roadways within Delta's municipal jurisdiction.· - The Owner will instruct contractors to adopt reasonable efforts to use water borne delivery methods for construction materials and the removal of waste materials.	Construction	VPA	MOT, COD, TransLink	GVRD, TFN	Complete	The Marine Works Contractor's original plan is contained within Section 9.0 of the DCL EMP and has been updated several times as construction has progressed. As construction and waste materials have been brought to and removed from the site primarily by water, not road, the focus of the plan has been on-site traffic. The Port's marine works construction contract specified that all general fill, preload, granular sub-base and aggregate base course materials should be imported by waterborne transport. This is estimated to have reduced project-related traffic on nearby roads by approximately 300,000 single dump truck loads, i.e. 300,000 return trips (600,000 one-way trips) on nearby roads. The Marine Works contractor was allowed to truck up to 50,000 m^3 of surplus preload to a South Fraser Perimeter Road (SFPR) site within Delta, since that created less traffic and emissions impact within Delta than fill located outside of Delta. Only 38,000 m^3 was actually taken to the SFPR site. Asphalt and ready-mixed concrete have been imported by truck, because there was no viable alternative that could provide the necessary time-sensitive delivery of these materials, which is essential for ensuring their quality. The Port and TSI have also built a temporary barge berth to bring construction materials to site by barge for terminal construction and for the east causeway habitat compensation project. This is expected to eliminate approximately 24,500 return truck trips through Delta. *See above.* *See above.*
Operation Environmental Management Plan							
3	*The Owner will develop or have developed and implement or have implemented a detailed Operation EMP. The development of this plan is described in the EAC Application (Section 21, pg. 694 onwards).*	Operation	VPA, Terminal Operator	EC, DFO, EAO	GVRD,COD, FN; HC, FHA	Complete	TSI, the Terminal Operator has updated their Operation EMP, including the Emergency Response Plan, to include the new berth at Deltaport. A copy of the draft EMP was provided to VFPA for review in mid-November 2009 and the EMP has now been finalized. The EMP is designed to capture, organize and manage activities at the terminal so that a consistent approach for controlling environmental risks can be implemented. Environmental management will be integrated into routine planning processes and daily terminal operations. TSI will review and update the EMP on an annual basis.
3.1	The Operation EMP shall include the following sub-plans which are further outlined below:· - A *Deltaport Terminal Environmental Management Plan*[13] - A *VPA Operations Environmental Management Plan*[14] - A *TSI Emergency Response Plan* (Note operational air impact mitigation strategies are in sections 19-21.)	Operation	VPA, Terminal Operator	As above	As above	Complete	*See above.*

Ref	Objective - Commitments and Assurances	Timing	Delivered By	Approving/ Lead Agencies [2]	Advisory Agencies	Status	Comments
3.2	The Owner will ensure that the Terminal Operator updates the existing *Deltaport Terminal Environmental Management Plan* (September 2004) to ensure that operation of the DP3 Project is carried out in accordance with the environmental goals and requirements presented in the EAC Application and discussed in section 21.2.3 of the EAC Application. In addition, the Terminal Operator must add environmental management measures to assess and minimize noise from the operation of the Project. The Deltaport Terminal EMP must be updated to include mitigation measures identified in this Assessment Report and would include equipment alarms, machinery noise, and operator awareness and training. Further details of this requirement and commitment are included in section 17 onwards of this Table.	Operation	VPA, Terminal Operator	As above	As above	Complete	*See above.*
3.3	The Owner will ensure that the Port *Operations Environmental Management Plan* available for the DP3 Project is updated to incorporate the latest Project design as it applies to ballast water and bilge water. For reference, see VFPA Harbour Operations Manual Revision, December 2007. http://www.portmetrovancouver.com/users/manualsandregulations.aspx	Operation	VPA, Terminal Operator	DFO, TC	GVRD, COD, TFN	Complete	With the formation of Port Metro Vancouver, Port Operations and Procedures have been updated to include the wider navigational and proprietary jurisdiction and includes Deltaport as a three berth container terminal. The Owner will proactively implement such practices and procedures as may be required to sustain safe and environmentally sound standards of marine operations in this area.
3.4	The Owner must ensure that an Emergency Response Plan is available and updated by the Terminal Operator. The Terminal Operator must update the terminal Emergency Response Plan (ERP) prior to the commencement of terminal operations. The ERP would ensure that an organized and practiced response is provided to incidents and emergency situations that might affect the provision of port services at the Roberts Bank port facility. The ERP would distinguish the individual responsibilities of the Terminal Operator, Corporation of Delta, BC Rail Company (BCRC), and MOT and would cover sections listed in Schedule 1 to this Table.	Operation	VPA, Terminal Operator	EC, COD	GVRD, TFN	Complete	TSI has updated their *Emergency Response Plan* to include the third berth, and this plan is included in the Operations EMP. See Section 3 for additional information.
3.5	The Owner has committed to a number of other operational environmental planning and management activities and they are listed in the relevant bio-physical and socio-community sections of this Owner's Table.			EAO		On-going	Addressed in relevant bio-physical and socio-community sections of this Owner's Table.
Environmental Monitoring							
4	*The Owner will ensure that general environmental monitoring and reporting for the construction and operation phases of the Project will be conducted, with respect to the terms and conditions of the EAC and other regulatory Permits, Approvals and Authorizations as applicable.*	Pre-construction, Construction, Operation	VPA, Contractors, Terminal Operators	EAO, DFO, EC	HC, FHA, GVRD, COD, FN		*See comments below.*
4.1	The Owner will ensure that the monitoring of the *Construction EMP*, outlined in section 21.2.4 of the EAC Application and in section 2 of this Table, will incorporate all plans developed for the construction phase of the Project and as detailed in the respective monitoring plans of the independent EMPs.	Construction	VPA, Contractors	EAO, DFO, EC	HC, FHA, GVRD, COD, FN	Complete	The construction EMPs were developed prior to the commencement of marine works and upland works, and the programs themselves were initiated with the start of construction activities with the potential for adverse impacts and continued throughout construction.
4.2	The Owner will ensure that each of the environmental monitoring plans will outline the rationale for monitoring, the parameters to be monitored, monitoring program details, and follow-up actions to be taken by the Owner or the Terminal Operator as appropriate.	Pre-construction, Construction, Operation	VPA, Contractors, Terminal Operators	EAO, DFO, EC	HC, FHA, GVRD, COD, FN	Complete	Each of the monitoring plans contained rationale, monitoring parameters and details of the programs within each of the individual plans. See Section 2 for additional comments.
4.3	The Owner will engage or have engaged an independent Environmental Monitor, or an environmental monitoring firm, for the construction phase of the Project. The Environmental Monitor will undertake environmental monitoring activities, and will implement each of the environmental monitoring plans developed for the Project and as reflected in the appropriate EMP. The Environmental Monitor will review, evaluate, and report to regulators on the construction activities and the effectiveness of the environmental control strategies and mitigation measures, with respect to the terms and conditions of the EAC and other regulatory Permits, Approvals and Authorizations that may apply.	Construction	VPA, Contractors	EAO, DFO, EC	HC, FHA, GVRD, COD, FN	Complete	Hemmera was retained to provide construction environmental monitoring services for the marine and uplands construction (both now complete). The first weekly monitoring report was completed on January 26, 2007, and weekly reports were generated during any marine construction activities that had the potential to adversely impact marine resources. Monitoring reports for the marine works were distributed to DFO, EC, CWS, MOE, VFPA, VPD and DCL. Marine works are now complete. Hemmera was also retained by TSI to provide construction environmental monitoring services for the upland terminal construction portion of the DP3 project. Weekly monitoring continued to be reported throughout the upland works and will be compiled in one stand-alone report to the DFO for the entire DP3 project. Monitoring reports for the upland works were distributed to DFO, EC, CWS, MOE, VFPA, and TSI.
4.4	A program of archaeological monitoring will be implemented if any excavation activities occur in the vicinity of the Cohilukthan Slough (west of 46A Street). If any archaeological sites are discovered during the proposed site construction, these sites would be reported to the British Columbia Archaeology Branch and the TFN and works would cease, pending their consideration. These sites would then be assessed for significance and, if required, protection measures established with construction proceeding under the supervision of an archaeologist.	Construction	VPA, Contractors, BCRC	MCS	MCS, TFN	Complete	No excavation activities occurred in the vicinity of the Cohilukthan Slough (west of 46A Street).
4.5	The Owner will ensure that the monitoring of the Operation[22] EMP, outlined in section 21.2.4 of the EAC Application and in section 3 of this Table, will incorporate all EMPs developed for the operation phase of the Project and as detailed in the respective monitoring plans of the independent EMPs.	Operation	VPA, Terminal Operator	EAO	MCS, TFN	Complete	VFPA has confirmed that the Terminal Operator (TSI) has updated their Operation EMP, including the Emergency Response Plan, to include the new berth.
Adaptive Management Strategy							
5	*The Owner and the Government of Canada, represented by EC, have taken steps to conclude an Agreement[15] on the compliance with the terms and conditions of an Adaptive Management Strategy for the inter-causeway marine and wildlife habitats. The Owners shall ensure that this Agreement and its environmental monitoring plan are fully complied with.*	Construction, Operation	VPA, Terminal Operator	EC	DFO,GVRD, COD, FN	On-going	The Scientific Advisory Committee (SAC) for the AMS was formed in 2007, with one member selected by each of the Port and EC, and the third jointly selected. The detailed AMS work plan, the 2007, 2008, 2009 and the first three of the 2010 quarterly reports and the 2007, 2008, and 2009 annual reports have been reviewed by the SAC. The 2007 annual report, dated July 2008, and the 2008 annual report, dated September 2009, and the 2009 annual report, dated September 2010, have been posted to the Port website at http://www.portmetrovancouver.com/projects/ongoing_projects/ Deltaport_Third_Berth_Project/Environment.aspx. The AMS will continue until 2014 and the annual reports for each year will be posted to the Port website.
5.1	The Owner will ensure that all details of Schedule B, dated April 2006, to the Agreement are complied with and shall conduct all required meetings to ensure that all parties to the Agreement, as specified in the Agreement and its Schedule B, comply with the intent of the Agreement and its amendments as required.	Construction, Operation	VPA, Terminal Operator	EC	DFO,GVRD, COD, FN	On-going	The AMS agreement was signed in December 2006, and the AMS program is underway. The most recent meeting of the SAC to discuss the first three draft 2010 monitoring reports, and the upcoming 2010 annual report was held on December 8, 2010. The next meeting of the SAC is anticipated to be scheduled for late Winter 2011.

Ref	Objective - Commitments and Assurances	Timing	Delivered By	Approving/ Lead Agencies [2]	Advisory Agencies	Status	Comments
5.2	The Owner commits to participate in the Roberts Bank Environmental Stewardship Program.	Construction, Operation	VPA	EC	DFO,GVRD, COD, FN	Complete	This initiative is being led by EC with support from the Port. Through the BIEAP-FREMP Management Committee a Reach Overview for Roberts and Sturgeon Banks was initiated. A project steering committee was formed in late 2008 and comprises representatives from Environment Canada, Department of Fisheries and Oceans, Transport Canada, BC MOE, Metro Vancouver, YVR , Ministry of Agriculture, Fisheries and Food, Corporation of Delta, City of Richmond, City of Vancouver, Tsawwassen First Nation, Katzie First Nation and the Port. The steering committee first met on Dec 5, 2008. Subsequent meetings were held in 2009 (Jan 23, Feb 12, May 28, Jun 26, Aug 11, and Sep 17) and 2010 (Feb 4, Apr 27 and Sept 23). In addition, a Stakeholders Workshop was held on June 8, 2010 and a follow-up technical Research Workshop was held on November 25, 2010. The Roberts and Surgeon Banks Reach Overview provides a river-based description and analysis of water, shoreline and upland issues that transcend individual municipal and agency boundaries. The Reach Overview uses an Ecological Features and Function Approach to management that includes estuary and upland features, while taking into account the biological, economic and social characteristics of the estuary. The final document is intended to serve as a planning and decision making tool for municipal planners, agency staff, First Nations, developers, landowners and members of the public to integrate foreshore and upland activities. The document builds on existing FREMP area designation information, habitat inventory and classification data, and other reach overviews. The final document, *Roberts Bank and Sturgeon Bank Reach Overview, Phase*, was completed at the end of November 2010 and will be available on the BIEAP-FREMP website http://www.bieapfremp.org/main_fremp.html or by request through VFPA.
Consultation with the Public and First Nations							
6	*The Owner will involve the local community, other stakeholders and First Nations within an open and interactive consultation process during final design, construction and throughout the first year of operation. Consultation will be carried out according to BC government policies included in EAO's Section 11 Order issued on September 17, 2004.*	Pre-construction, Construction, early Operation	VPA	EAO,COD, TFN	Agency, FN	On-going	*See comments below.*
6.1	The Owner will conduct public as well as First Nations open houses and information sessions, at least twice each year, to provide information on the progress of design, construction, schedules, and upcoming milestones.	Pre-construction, Construction, early Operation	VPA	EAO,COD, TFN	Agency, FN	On-going	Public open houses/info sessions were held on May 29, May 31 and November 24 in 2007; May 29 and December 2 in 2008; March 14, May 30, June 27, July 12, November 28 and November 29 in 2009; June 5, June 12, June 13 and June 26 in 2010.The Port hosted a specific information session for the TFN community at the TFN recreation hall on July 22, 2009.
6.2	The Owner will continue to update and make available media information material, as part of its public information commitment.	Pre-construction, Construction, early Operation	VPA	EAO,COD, TFN	Agency, FN	On-going	The *DP3 Community Liaison Plan* (CLP) outlines media relations activities that are undertaken to provide the public with current up-to-date information. The CLP is available on the project website and in library resource files.
6.3	The Owner will implement a complaint tracking and response mechanism, agreed to by EAO prior to start of construction, for the construction phase of the Project. The Owner will commit to the organization of a Community Liaison Committee (CLC), including a representative from COD, for addressing public concerns. The Owner will also continue to liaise with First Nations, independently or though the CLC, to address relevant concerns over Project impacts.	Pre-construction, Construction, early Operation	VPA	EAO	Agency, FN	On-going	The Port implemented an issues and response tracking system during the pre-application phase of the Project, and the Deltaport Third Berth Project Community Liaison Committee (DCLC) formed in early 2007, with the first meeting held on March 22, 2007. The issues and response tracking system is outlined in the *"Deltaport Third Berth Project, Community Liaison Plan, Construction and First Year Operation Phase"* , December 12, 2006, amended April 23, 2009, which is available online on the Port's website. The draft Community Liaison Plan was reviewed by the EAO and approved via email on November 21, 2006. Tracking includes issues that arise via the project information and feedback line, through correspondence and meetings with team members, as well as issues raised at public events. In addition, comments received by or directed to the Deltaport Third Berth Project Community Liaison Committee (CLC), are included in overall issues tracking for the project. A copy of the DP3 Issues Tracking document is available on the project website and in library resource files. The DCLC is made up of eighteen members, including a representative from the Port, TSI, COD and TFN. The Terms of Reference has been adopted by the committee and is available on the Port website. The purpose of the committee is to work with the Port and port stakeholders to address issues pertaining to the construction and first-year operation of the project. The first meeting was held on March 22, 2007. Subsequent meetings in 2007 were held on April 19, May 1, June 11, June 26, July 3, September 6, October 25, and November 29. Meetings in 2008 were held on January 17, February 28, April 24, June 26, August 28, October 23 and November 27. Meetings in 2009 were held on January 22, February 19, April 16, June 18, September 17 and November 19. Meetings in 2010 were held on January 21, March 30, May 27, June 24th, September 23 and December 2. *For First Nations liaison, see Section 6.1 and 6.4.*
6.4	The Owner will continue to engage in consultation with relevant First Nations identified in the Assessment Report[16] throughout the Post-Review and Construction Phases, including discussions on economic development opportunities, employment and cultural display opportunities generated by the Project. More specifically, such consultation shall continue with those First Nations who have informed EAO or the Owner on the Project's adverse impacts on their asserted aboriginal rights, appropriate accommodation to reflect on such impacts as discussed and described in the EAO Assessment Report.	Pre-construction, Construction	VPA	EAO, FN	Agency, FN	On-going	Prior to Project certification, the Port consulted with a number of First Nations, including the Musqueam, TFN, Sencot'en Alliance (SA), and the Hul'qumi'num Treaty Group (HTG). Since project initiation, project updates have been sent to First Nations, including TFN, SA, HTG and Katzie. The project updates are available on the Port website at http://portmetrovancouver.com/projects/ongoing_projects/Deltaport_Third_Berth_Project/Project_updates.aspx. In addition, the Port hosted an information session for the TFN community at the TFN recreation hall on July 22, 2009. Economic and employment opportunities for the TFN during the construction of DP3 included over 15 person years of employment and over $1.5 million in direct construction contracts.
6.5	Before start of construction, the Owner shall provide to the EAO a report on the results of discussions reflected in section 6.4. The report shall also include a discussion on any aboriginal fishery issues defined in section 13 of this Table.	Pre-construction	VPA	EAO	Agency, FN	Complete	This report has been completed and submitted to EAO. The report is titled *"Deltaport Third Berth Project First Nations Consultation Report"* , dated February 2007, and is available on the EAO website at: http://a100.gov.bc.ca/appsdata/epic/documents/p212/d23743/1175534004825_edaffc899cfa4211859383b8c4953d6d.pdf
	Further socio-community commitments are included in section 26 of this Table.						
Specific Construction and Operation Issues							
7	*The Owner shall implement the Mitigation Measures and Compensation Measures committed to in the Traffic Section of the Application's Table 20.1 - pages 663/664. Further general commitments are listed below and specific impact sector commitments are included in the specific sections below.*	Construction, Operation	VPA, Terminal Operator, Contractors	MOT, COD, TFN , ALC	GVRD, TransLink		*See comments below.*

Owner's Table of Commitments and Assurances[1]
Status Update as of January 31, 2011

Ref	Objective - Commitments and Assurances	Timing	Delivered By	Approving/ Lead Agencies [2]	Advisory Agencies	Status	Comments
7.1	The specific traffic commitments to be undertaken in consultation with MOT and COD include:·	Construction, Operation	VPA, Terminal Operator, Contractors	MOT, COD, TFN , ALC	GVRD, TransLink	Complete	All road improvements have been available for use since late September 2008. MOT has addressed requests/deficiencies identified by COD.
	- Implement signal modifications at Highway 17/Ladner Trunk Road, as appropriate and approved by MOT and COD;·					Complete	This project has been completed as documented in the MOT report titled *"Highway 17 Corridor Improvements, Construction Contract Completion Report",* undated. Information requests for this report can be made through the MOT.
	- Extend HOV lines lanes on Highway 17;·					Complete	This project has been completed as documented in the MOT report titled *"Highway 17 Corridor Improvements, Construction Contract Completion Report",* undated. Information requests for this report can be made through the MOT.
	- Monitor pre- and post-construction noise adjacent to Highway 17 improvements and if necessary implement appropriate sound attenuation measures, subject to results of monitoring;·					Complete	A post-construction noise monitoring report has been received ("*Highway 17 Corridor Improvements Project – Results of Pre- and Post-Project Noise Monitoring* ", dated January 17, 2009), the results of which indicated that "the Highway 17 Corridor Improvements Project has not resulted in a measurable change in community noise levels at residences in the vicinity of the intersection of Ladner Trunk Rd and Highway 17," and no further noise mitigation is required.
	- Expand the Highway 99 Massey Tunnel congestion management system on Highway 17 as part of the highway improvements ;·					Deleted from Project	This commitment was deleted from the project at the request of COD due to their concern that trucks would use the Ladner Trunk Road route to avoid the tunnel congestion. The deletion of this work was discussed and confirmed at a October 15, 2007 meeting with MOT, COD, RCMP, Delta Police and VFPA. An update on all Highway 17 corridor improvements, including the deletion of this particular commitment, was presented to the DCLC on October 25, 2007.
	- Investigate safety incidents with MOT that were recorded by the Port at Deltaport Way and 41B Street; and·					Complete	MOT reviewed the Port's traffic video and discovered a traffic signal timing malfunction at Deltaport Way and 41B Street, which was subsequently corrected. Since the signal was corrected, no further complaints have been received that the Port or MOT is aware of.
	- Subject to COD approval to close 57B Street rail crossing provide alternate access for farm equipment such as the proposed service road adjacent to the BC Rail Line between 57B Street to 64th Street.					On-going	Delta Council endorsed the plan on January 12, 2009 presented by Delta Engineering (and supported by the DFI) for an overpass at 28th Ave at Highway 17 prior to the closure of 57B. Delta Council further confirmed support in principle for an overpass at 41B Street at Deltaport Way. MOT is responsible for the delivery of this work and VFPA is a direct participant in the projects, along with the other Roberts Bank Rail Corridor partners. VFPA is also providing funding for the 28th Ave project. The 28th Avenue project is anticipated to be completed in March 2011.
7.2	The Owner will ensure that Transport Canada will undertake a warrant review for an overpass at the 80th Street rail crossing as part of their Roberts Bank rail corridor assessment and determine the appropriate funding if an overpass is required.	Construction, Operation	VPA	TC, COD, ALC	GVRD, TransLink	Review complete, implementation on-going	The Roberts Bank rail corridor assessment was completed in early 2007, and the results were documented in a report titled "Roberts Bank Rail Corridor: Road/Rail Interface", dated February 2007. The study was coordinated by Transport Canada with other participants including MOT, TransLink, Greater Vancouver Gateway Council and the Port, and the final report was distributed to the participants of the study and other stakeholders including CN, CPR, BCRC, Southern Railway of BC, the Corporation of Delta, and others. The 80th Street overpass is proceeding with COD responsible for delivering the project along with RBRC. VFPA is a funding participant in the project and is directly involved on the project Steering Committee. Design work on this project is underway.
7.3	The Owner will implement signal modifications at Ladner Trunk Road and Highway 17 (including Optimize Signal Timing; Move the Detector Loops; and Relocate the Northbound and Southbound Detector Loops).	Operation	VPA	MOT, COD	GVRD, TransLink	Complete	This was completed in conjunction with Highway 17 mitigation measures. See Section 7.1.
7.4	The Owner will work with MOT to amend the *Motor Vehicle Ac* t thereby restricting commercial vehicles to the outside (curb) lane on Highway 17.	Construction, Operation	VPA	MOT, COD	GVRD, TransLink	Complete	Regulatory signage for restricting commercial vehicles to the curb through lanes of Highway 17 at Ladner Trunk Road were erected in January 2008.
7.5	The Owner will implement geometric changes to the highway ramps in the southeast quadrant of the Ladner interchange.	Construction, Operation	VPA	MOT, COD	GVRD, TransLink	Complete	This was completed in conjunction with Highway 17 mitigation measures. See Section 7.1.
7.6	The Owner will work with BC Rail Port Sub Ltd. and the Delta emergency service providers to ensure that the existing emergency access protocols are adhered to for the specific grade crossings including access to Boundary Bay Airport (36th Ave., 72nd St., 80th St.), and 64th Street.	Construction, Operation	VPA	COD, ALC	GVRD, TransLink	Complete	The Port has confirmed that BC Rail Company (BCRC) follows standard procedures to move trains to ensure access across grade crossings in the event of an emergency. These procedures include splitting the train to open the crossing, if required, and BCRC contacting the Delta Police and/or RCMP for assistance if the crossing cannot be opened.
7.7	The Owner will participate with the COD and other stakeholders in the preparation of an incident management plan regarding traffic management and assist with the geometric and structural improvements to accommodate incident management bypass traffic and response measures along with safety improvement measures on Deltaport Way associated with truck incidents on the corridor.	Construction, Operation	VPA	MOT, COD	GVRD, TransLink	On-going	The Port continues to consult with COD and other stakeholders on these issues (see section 7.2). The Roberts Bank Rail Corridor Study identified a series of improvements in the corridor that are currently in the implementation planning stage. The detailed road concepts in the vicinity of the road crossings are being developed by the RBRC partners. Each project has a Project Steering Committee and technical committees that meet monthly, at a minimum. The overall Program partnership meets once each quarter, at a minimum. In addition, the Port has been working with the Provincial Gateway office to consider other road-related issues brought forward by COD and other stakeholders. A local access improvement program has been developed and agreed to in principle by farmers, COD, MOT, the Provincial Gateway office, TC, MOE, etc. At a January 12, 2009 Council meeting, Delta Council endorsed the plan presented by Delta Engineering (and supported by DFI) for an overpass at 28th Ave prior to the closure of 57B. (See comment 7.1). TSI developed a Deltaport Traffic Management Plan (TMP), and as part of that plan TSI proactively manages their container truck reservation system in order to minimize traffic impacts on Delta. Since the implementation of the TMP in June 2009, there has been a significant reduction in traffic queues on Deltaport Way and a reduction in traffic impacts to Highway 17. VFPA is also proactively monitoring truck traffic at Deltaport 24/7 as part of its Corporate Social Responsibility program.
7.8	The Owner will work with the Corporation of Delta to conduct a preliminary design of improvements to the intersection of Arthur Drive/34B Avenue to correct the existing sight line problems.	Construction, Operation	VPA	MOT, COD	GVRD, TransLink	Future commitment	This commitment is part of the local access improvement program, which has been agreed to in principle (see comment 7.7). The Port will work directly with COD to develop improvement options for this location once the plan has been endorsed. Preliminary assessment has been identified for 2011. The COD will be preparing an RFP for this work with preliminary assessment and design work completed in 2011, with implementation to follow.
7.9	The Owner will continue to work with the COD, City of Surrey, City of Langley and Township of Langley to reduce traffic impacts.	Construction, Operation	VPA	Non-specific	GVRD, TransLink	On-going	This has been considered as part of the Roberts Bank Rail Corridor Road Rail Interface Study, which was completed in February 2007 (See 7.2 above). Preliminary design is underway on all of these projects and detailed design is proceeding on 152nd Street, Panorama Ridge, 41B Street and 80th Street. Website: www.robertsbankrailcorridor.ca.

Ref	Objective - Commitments and Assurances	Timing	Delivered By	Approving/ Lead Agencies [2]	Advisory Agencies	Status	Comments
7.10	The Owner commits to working with relevant authorities and parties to optimize the performance, efficiency and reliability of container truck movements to relieve traffic congestion on local roads.	Construction, Operation	VPA	Non-specific	GVRD, TransLink	On-going	This work is on-going and involves liaison with MOT, COD, the DCLC, and others. Meetings held to address truck traffic issues include a June 5, 2009 meeting with COD, Delta Police, RCMP, MOT, and TSI, an August 26, 2009 meeting with the DCLC traffic sub-committee, and a September 17, 2009 meeting with DCLC (TSI also attended). In addition, TSI has developed a Traffic Management Plan (TMP) for the Deltaport facility. The TMP was finalized in 2009 and revised in Spring 2010 after the opening of Berth 3. The Port monitors performance of TSI's TMP on a daily basis to ensure that TSI takes appropriate actions as necessary to address traffic problems. PMV and TSI have committed to further work with the Delta community with the establishment of the 'Delta Container Truck Traffic Working Group'. This Group is co-chaired by PMV & TSI, and additional members include the Corporation of Delta, BC Ministry of Transportation (Highways & CVSE), Delta Police Department, RCMP, and ICBC. The working group works together to address traffic issues such as terminal gate congestion, issues related to the habitat compensation project along the East Causeway, community issues, etc. The Work Group met on an approximately monthly basis during 2010 and have committed to continue working together through 2011.
Coastal Geomorphology							
8	*The Owner shall commit to a long-term coastal geomorphology monitoring program, as reflected in the AMS referenced in section 5 above, and consistent with the Habitat Compensation Plan and any future Fisheries Act Habitat Authorization monitoring requirements.*	Construction, Operation	VPA, Terminal Operator	EC, DFO	COD, FN, MOE, NRCan	Implemented	This commitment is met through the Adaptive Management Strategy monitoring program. The monitoring programs have been designed to be consistent with each other to maximize the utility of the data gained. Monitoring for both programs is on-going.
8.1	The Owner will ensure that shoreline protection (sloping rock revetment) along the newly created shoreline is designed to minimize reflection and propagation of waves.	Construction, Operation	VPA, Terminal Operator	EC, DFO	COD, FN, MOE, NRCan	Complete	The newly created shoreline has been designed to minimize reflection and propagation of waves. VFPA will be provided with the P.Eng-signed as-built drawings upon completion of all construction works.
8.2	The Owner will ensure that any repairs to the crest protection in the new tug basin, if required, will be planned and constructed to maintain its current location and function, thereby mitigating any potential effects.	Construction, Operation	VPA, Terminal Operator	EC, DFO	COD, FN, MOE, NRCan	Compete	The design of the new tug basin includes details ensuring the current location and function of the crest protection will be maintained. Dredging of the tug basin and slope protection have been completed. The VFPA received a DFO Authorization (#HPAC-PA1-000-000144-2) in December 2008 for construction of a temporary barge berth facility located within the new Deltaport tug basin. Modification of the crest protection was authorized for the temporary barge berth facility. The modification of the crest protection is reported on in the weekly environmental monitoring reports submitted to the DFO.
Water Quality							
9	*The Owner will ensure that the construction works and operations for the Project are conducted in compliance with legislated requirements and BMPs, with particular attention to construction practices that prevent the introduction of deleterious substances, pursuant to section 36(3) of the federal* Fisheries Act, *into fish frequented waters.*	Construction, Operation	VPA, Contractors, Terminal Operator	EC	COD, TFN, DFO	Complete	*See comments below.*
9.1	The Owner will ensure that all reasonable measures are taken to prevent the discharge to the marine environment of substances that are deleterious to fish, fish habitat or man's use of fish at the construction sites at any time during dredging, filling and construction of the terminal supportive structures and auxiliary facilities or at any other construction sites in the proximity of fish and aquatic habitat. Particular attention should focus on discharges of suspended sediments, construction waste, handling of uncured concrete and other potentially deleterious substances.	Construction, Operation	VPA, Contractors, Terminal Operator	EC	COD, TFN, DFO	Complete	Prior to the start of construction, environmental management plans were developed for use during the construction phase of the project (see Section 2 of this table). These plans included those for surface water quality and sediment control, hazardous waste management and spill control, and a marine environmental monitoring plan, amongst others. These plans were followed during the construction works to minimize the potential for adverse impacts to fish resources. In addition, an Environmental Monitor was on site during construction works that had the potential to impact the aquatic environment, with monitoring reports submitted to DFO, EC, CWS and MOE, amongst others, on a weekly basis.
9.2	The Owner will also commit to the following measures during construction:· - Implement containment dykes for dredging and terminal land fill operations to contain materials and prevent spill-over into surrounding foreshore areas.· - Dredged material will be pumped into the contained terminal area where the solids settle out.· - Decant water and suspended silt will be completely contained during the landfill process and will either be re-pumped via submerged pipeline or deposited via bottom dump barge to approved EC ocean disposal sites. · - Comply with DFO dredging guidelines for the protection of marine resources susceptible to total suspended solids (TSS) levels at Roberts Bank.· - Implement a marine water quality monitoring plan referenced in section 2.10 of this Table.	Construction, Operation	VPA, Contractors, Terminal Operator	EC	COD, TFN, DFO	Complete	The construction of the containment dikes was initiated on January 18, 2007, and the *Water Quality Management Plan* was implemented. A containment dike, referred to as containment dike #1, was constructed (completed May 2, 2007) to enclose an area west of the existing tug basin and Westshore boat launch. Placement of material behind containment dike #1 commenced on June 29, 2007. A secondary containment dike was constructed between June 16 and July 12, 2008, located east of the existing tug basin. An additional containment dike (dike #3) was constructed between August 26 and September 02, 2008. It was constructed within the caisson trench between the perimeter dike and Caisson 20 for material placement from south to north in the caisson trench, east of containment dike #2. Silt curtains were used in combination with containment dike #3 for general fill placement in the caisson trench. Due to depth (>-5m CD) in the caisson trench, silt curtains were used to mitigate turbidity impacts for the remainder of general fill placed north along the caisson trench. Pumping of dredged material to behind containment dike #1 was completed January 25, 2008. Decant water and suspended silt was pumped by the Contractor via submerged pipeline to an approved ocean disposal site. Additionally, water was permitted to flow through the semi-porous perimeter dike as per tidal influences. DFO dredging guidelines for the protection of marine resources susceptible to total suspended solids (TSS) levels at Roberts Bank were complied with. A *Marine Water Quality Monitoring Plan* has been implemented as per Section 2.10 of this table. As mentioned in section 4.0 above, an Environmental Monitor has been on site during construction works that have the potential to impact the aquatic environment.
Sediment Quality							
10	*The Owner will ensure that the construction works and operations for the Project are conducted in compliance with environmental protection requirements, the EMPs discussed above and relevant BMPs and shall commit to sediment quality monitoring as reflected in the AMS referenced in section 5, above.*	Pre-construction, Construction, Operation	VPA, Contractors	EC, MOE	COD, TFN	Complete (marine and upland works), AMS work on-going	The construction works were conducted in compliance with the conditions of the *Fisheries Act* Authorization (02-HPAC-PA1-000-000144, December 2006) and all applicable Approvals and Permits. Environmental Monitoring Plans (see Section 2) were complied with during construction. In addition, sediment monitoring is being conducted as part of the AMS program with the most recent sampling program being conducted in August 2010 (see Section 5 above). This sediment monitoring will continue to be reported in the annual AMS reports which will be posted to the Port website.
10.1	The Owner will meet suspended sediment recommendations of the "Canadian Water Quality Guidelines for the Protection of Aquatic Life" and the "BC Approved Water Quality Guidelines".	Pre-construction, Construction, Operation	VPA, Contractors	EC, MOE	COD, TFN	Complete	The Environmental Monitoring Programs were initiated with the start of marine works and were implemented throughout construction. As part of the program, water samples are collected and assessed for water quality parameters and for compliance with the allowable limits. Results were reported in the weekly construction environmental monitoring reports.

Ref	Objective - Commitments and Assurances	Timing	Delivered By	Approving/ Lead Agencies [2]	Advisory Agencies	Status	Comments
10.2	Stormwater from the Deltaport DP3 terminal will be directed through an oil interceptor and catch basins to act as a sedimentation tank to collect possible contaminants prior to discharging storm water effluent to the ocean.	Construction, Operation	VPA, Contractors	EC, MOE	COD, TFN	Complete	Construction is complete. As-built drawings have been received and are currently under review.
10.3	The Owner will decommission and replace the eight existing storm outfalls, located along the northern perimeter of Deltaport, with new storm outfalls, located away from intertidal areas to drain into deeper water off of the new berth face.	Construction, Operation	VPA, Contractors	EC, MOE	COD, TFN	Complete	Construction is complete. As-built drawings have been received and are currently under review.
10.4	The Owner will fit new storm outfalls with shut-off valves to terminate flow from the Project should a sizeable spill occur on the terminal and enter the stormwater system.	Construction, Operation	VPA, Contractors	EC, MOE	COD, TFN	Complete	Construction is complete. As-built drawings have been received and are currently under review.
	Conditions pertaining to disposal at sea are included in section 27 below.						
Marine Environment							
11	*The Owner has agreed to develop a final Habitat Compensation Plan that meets DFO Policy objectives in support of a Fisheries Act authorization for the construction of the Deltaport Third Berth Project. See Schedule 1 EMP - Marine Environment Management Plan for additional details on the final Habitat Compensation Plan and monitoring.*	Pre-construction, Construction, Operation	VPA	DFO	FN, EC, MOE	Complete	The Habitat Compensation Plan and Habitat Compensation Monitoring Plan was submitted to DFO as part of the application package for DFO Authorization (02-HPAC-PA1-000-000144, December 2006). The Authorization places conditions on the Port, and those conditions are being complied with and are ongoing. Details will be provided in the following subsections as the work is conducted.
11.1	The Owner has agreed that the final *Habitat Compensation Plan* and Habitat Authorization will reflect all onsite and off site options identified in the *Proposed Habitat Compensation Plan* (March 12, 2006). The owner recognizes that the habitat targets specified in the *Proposed Habitat Compensation Plan* (March 12, 2006) may change as more detailed information and plans are developed to meet the requirements of a Section 35(2) *Fisheries Act* authorization.	Pre-construction, Construction, Operation	VPA	DFO	FN, EC, MOE	Complete (salt marsh, reefs and caisson refugia) On-going (east causeway)	All components except for the sandbar stabilization component are complete. In October, 2009, DFO advised the Port that the proposed sandbar stabilization/ dendritic channel modification works did not address all the risk factors and would not proceed. As per the DFO authorization, the Port is instead providing funds for a third party (to be chosen by DFO) to develop fish habitat elsewhere in the estuary. The Port's involvement ends with the provision of the funds.
11.2	As part of the *Habitat Compensation Plan*, the owner is committed to entering an agreement with Ducks Unlimited Canada, DFO, EC and such other agencies or organizations as may be identified as being appropriate to ensure that the proposed off-site compensation is delivered in a timely and efficient manner. This agreement will commit the owner to providing $1.5 million in funding to ensure the off-site compensation program is achieved.	Pre-construction, Construction, Operation	VPA	DFO	FN, EC, MOE	Complete	The off-site compensation agreement, the *"Fish and Migratory Bird Habitat Agreement"*, December 5, 2006, was executed by all parties (DFO, EC, Ducks Unlimited Canada, VFPA, and the Pacific Salmon Foundation) in December 2006. The Port provided funding and the works were conducted by other signatories to the agreement. The Rose-Kirkland Island habitat compensation works were completed in Spring 2009. A DFO biologist toured the site with a Ducks Unlimited Canada biologist in August 2009 and both were very satisfied with the work. A new, similar project will be initiated on Frenchies Island in 2010, using funds left over after completion of the Rose-Kirkland project.
11.3	The Owner commits to the following measures to protect the fish habitat:·	Pre-construction, Construction, Operation	VPA	DFO	FN, EC, MOE		The DFO *Fisheries Act* Authorization (02-HPAC-PA1-000-000144, December 2006) and the Environmental Management Plans (see Section 2) are being complied with. Where construction activities have resulted in variations from the Authorization, these have been documented and submitted to DFO for review and approval where required. Further, where required, additional mitigation measures have been implemented (see below).
	- The Owner will comply with DFO guidelines to minimize disruption of intertidal/subtidal mudflat habitat or loss of individual adult crabs and fishes:·					Complete	
	- No dredging is permitted in waters less than -5 m CD deep from March 1 to August 15 for the protection of juvenile salmon unless the works area is adequately isolated from fish bearing waters to the satisfaction of DFO; and·					Complete	Construction of containment dike #2 took place from May 5th to June 2nd, 2008 in waters less than -5m CD. VFPA provided DFO with a notification of the activity in a letter dated January 22, 2008. Fish and crab salvages were conducted under DFO License (#08.108). MOE advised (via email on June 2, 2008) that permits were not required because the salvages were conducted within tidal waters.
	- From October 15 to March 31 there shall be no works conducted which would result in a significant disturbance to the seabed of outer Roberts Bank which is situated in water greater than -5 m CD deep at daily low water for the protection of adult ovigerous female Dungeness crabs.					Complete	The FRPD Cutter Suction Dredge ship began dredging on March 28, 2007 in water greater than -10 m CD. Also, VPD Barge No 2 conducted clamshell dredging in waters greater than -5 m CD from October 15, 2007 onward. VFPA notified DFO of the works to be conducted in notification letters dated March 23, 2007, and October 11, 2007. Crab salvages were also conducted prior to and periodically during the dredging periods, with documentation of the salvages produced by DCL and sent to DFO by VFPA. No permits were required for the crab salvage work.
	- Bubble or silt curtains will be used to keep juvenile salmon away from specific works in water less than -5 m CD if monitoring indicates they are present. ·					Complete	Silt curtains were only used during fill placement in the caisson trench. For other work, fish salvages were conducted (e.g. behind the containment dikes). Rock placement for the perimeter dike was conducted in water shallower than -5mCD. DFO indicated that they had no objection to dike core rock placement as PMV had proposed and conducted.
	- Monitor over time to determine whether crab nursery habitat re-establishes itself along the newly created foreshore. If re-establishment is unsuccessful, two adjacent crab nursery areas will be enhanced to ensure full compensation;·					Future commitment	This monitoring will be conducted once the crab nursery habitat has had sufficient time to re-establish itself and will be reported through the AMS program.
	- Survey the intertidal mudflat area within the Project footprint immediately prior to construction. Relocate any adult Dungeness crabs found to a suitable adjacent habitat prior to completion of containment dyke; and·					Complete	Crab surveys and salvages were conducted periodically during the marine works, with documentation of the salvages produced by DCL and sent to DFO by VFPA. No permits were required for the crab salvage work.
	- To the extent possible reasonable efforts will be made to relocate adult Dungeness crabs from intertidal areas prior to dredging.					Complete	Crab salvages were conducted prior to and periodically during the dredging periods, with documentation of the salvages produced by DCL and sent to DFO by VFPA. No permits were required for the crab salvage work.
11.4	The Owner commits to an appropriate monitoring plan to assess the performance of the compensation habitat designs and to ensure there is "no net loss" in the productive capacity of fish habitat. If the compensation habitat is not functioning to DFO's satisfaction, by the end of the monitoring period specified in the subsection 35(2) *Fisheries Act* authorization additional works and monitoring will be required to ensure the compensation habitat functions as designed or if appropriate, additional habitat compensation is provided.	Pre-construction, Construction, Operation	VPA	DFO	FN, EC, MOE	On-going	Pre-construction data gathering was completed for all components of the Habitat Compensation plan prior to the start of habitat construction. Post-construction monitoring has been implemented for all constructed components in accordance with the requirements of the DFO Authorization.
12	*The Owner accepts that the additional container ship traffic as a result of the Project has the potential for some impacts on marine mammals. This issue is generally covered in the Marine Environment EMP, included in section 2.10 above and outlined in Schedule 1 of this Table.*	Construction, Operation	VPA	DFO	FN	Indefinite on-going	The marine mammal monitoring program has been developed and implemented, and the program can be found within Schedule C of the *Fisheries Act* Authorization (02-HPAC-PA1-000-000144, December 2006). See Subsections 12.1 through 12.4 of this table for additional information.
12.1	The Owner will ensure an underwater noise inventory of all equipment proposed for the Project will be developed and a marine noise-monitoring program will be established to measure acoustic frequencies of all marine construction equipment (dredge equipment, vibro-flotation equipment, other marine construction equipment). See Schedule 1 Marine Environment Management Plan for additional details on underwater noise and marine noise monitoring and noise mitigation measures to protect marine mammals.	Construction	VPA	DFO	FN	Complete	The baseline underwater acoustic assessment work has been completed for marine construction works related to dredging activity and vibro-densification activity that generate underwater acoustic levels that may affect whales. The baseline surveys are documented in two Jacques Whitford-AXYS reports titled *"Source Level Study of the Dredge Columbia and Killer Whale Acoustic Impact"*, dated 14 May, 2007, and *"Vibro Densification Source Level Study and Killer Whale Acoustic Impact"*, dated September 17, 2007, which were distributed to DFO. See Section 2.4 (Marine Mammal Monitoring) of the compliance report for additional information.

Ref	Objective - Commitments and Assurances	Timing	Delivered By	Approving/ Lead Agencies [2]	Advisory Agencies	Status	Comments
12.2	The Owner will ensure that any densification equipment (i.e. vibro-flotation head) is shut down while densification equipment is being relocated.	Construction	VPA	DFO	FN	Complete	Marine vibro-densification work is complete. Based on the acoustic monitoring conducted for this equipment (noise from the equipment did not propogate well through shallow waters and behavioural disturbance to whales was found to occur at less than 200 metres and even less for other marine mammals) and because the repeated shut down and start up of the equipment was possibly more detrimental than allowing it to run, the vibro-densification head was not routinely shut down during small movements of the equipment. However, the head was brought up to shallow waters prior to movement to minimize the propogation of the sound waves. During any significant movement of the equipment, it was shut down. Note that these modified procedures complied with the *Fisheries Act* Authorization 02-HPAC-PA1-000-000144, December 2006, based on the acoustic monitoring and modeling submitted to DFO for review and approval.
12.3	The Owner commits to prepare a report on Orca pods in the vicinity of the Project and to assess avoidance and mitigation measures (the 0.5 kHz trigger threshold, vessel speeds) when pods are traversing the offshore areas of Roberts Bank. DFO marine mammal scientists will be consulted to ensure the report complements marine mammal monitoring requirements identified in the *Fisheries Act* authorization. A copy of the final report will be provided to DFO.	Construction	VPA	DFO	FN	Complete	The Marine Mammal Monitoring program has been completed. Originally, eight Marine Mammal Surveys were planned, however, one additional survey was conducted, for a total of nine surveys. The reports are dated as follows: June and September 2007, January, May, June, August and September 2008, and January and May 2009. All reports have been submitted to DFO.
12.4	The Owner will work with BC Pilots to develop an education and awareness program about marine mammals and have pilots of vessels transiting to Roberts Bank steer away from observed marine mammal pods when vessel safety is not compromised.	Operation	VPA	DFO	FN	On-going	The Port developed a marine mammal awareness pamphlet, entitled "Marine Mammals of the Roberts Bank Area". Distribution of the pamphlet began in December 2008 and continues to be distributed as appropriate. The pamphlet has been distributed to marine pilots, marine contractors, various agencies, at open houses, and more. Additionally, the Port is working with its marine mammal monitoring program consultant on a series of guiding principles for marine pilots in the development of the marine mammal awareness and education program.
13	*The Owner will monitor and evaluate any aboriginal or commercial fisheries issues during Project dredging and construction.*	Pre-construction, Construction	VPA	EAO, DFO	FN	Complete	The Port has met with TFN to discuss dredging and construction effects on their aboriginal fishery in and around the project area during Project construction, which is now complete. TFN has not indicated that the construction program has had any direct impacts on aboriginal or commercial fisheries.
13.1	The Owner and its contractors will use reasonable efforts to avoid any disruption of aboriginal or commercial fisheries.	Pre-construction, Construction	VPA	EAO, DFO	FN	Complete	The marine works component of the Project is complete.
Waterfowl and Coastal Seabirds							
14	*The Owner will ensure that the applicable mitigation and compensation regarding waterfowl and coastal seabirds is implemented and shall commit to bird monitoring as reflected in the AMS referenced in section 5 above.*	Construction, Operation	VPA, Contractors	EC	MOE	On-going	*See comments below.*
14.1	The Owner will ensure that it is in compliance with the *Migratory Birds Convention Act* (MBCA), the *Species At Risk Act* (SARA), and the *Migratory Birds Regulations* (MBR) for the life-cycle duration of the Project.	Construction, Operation	VPA, Contractors	EC, MOE	MOE	On-going	The Port has been in compliance with the *Migratory Birds Convention Act* (MBCA), the *Species At Risk Act* (SARA), and the *Migratory Birds Regulations* (MBR) during construction. Waterfowl and coastal seabird surveys were conducted as part of the first three years of the AMS and the results are included in the annual reports. The 2007, 2008 and 2009 Annual AMS reports are available on the VFPA website at http://portmetrovancouver.com/Libraries/PROJECTS_Deltaport_Third_Berth_Project/080718_AMS_2007_Annual_Final.sflb.ashx. Great blue heron and brant surveys will continue to be conducted as a part of the AMS during key timing windows for these species. During construction activities, observations of waterfowl and coastal seabirds were also made during environmental monitoring and reported in the weekly EM reports that were distributed to DFO, EC, CWS, and MOE, amongst others.
14.2	Although construction of the Project would not impact the pelagic cormorant colony nesting on the Westshore jetty structure, the Owner commits to consult with government and non-government agencies to establish pelagic cormorant resting/roosting structures in the study area away from port docks.	Construction, Operation	VPA, Contractors	EC, MOE	MOE	On-going	Impacts on cormorants have ammeliorated significantly since Westshore modified its maintenance activities to reduce impacts on nests. As the issue has not been raised as a concern since construction started, the Port is suspending further consultation.
14.3	Relocation of the osprey nest to a safer location. The Owner will work with the appropriate regulatory authorities to relocate this nest.	Construction, Operation	VPA, Contractors	EC, MOE	MOE	Complete	The osprey nest was re-located on March 13, 2007 to a location approximately 200m north of the new perimeter dike and approximately 120m east of the Deltaport Causeway. Regulatory authorities were consulted and an MOE wildlife permit (#SU07-31495) was issued to Hemmera on behalf of the VFPA prior to nest relocation. The osprey have been observed in the area following relocation; however, they are not yet using the relocated nest.
14.4	The Owner will undertake construction works in upland areas (off causeway) in the winter months to prevent impacts to nesting species and to limit sensory disturbance to wildlife. Nesting time windows are listed in section 2.8.	Construction, Operation	VPA, Contractors	EC, MOE	MOE	Complete	BCRC upland trackwork is substantially complete (as of February 24, 2010), and was completed within timing windows and/or in conjuction with nesting surveys to ensure avoidance of wildlife implacts.
14.5	Limit disturbance of the ditch between 57B Street and 64th Street and prevent siltation of its aquatic habitats, by erecting fences and silt curtains prior to construction.	Construction, Operation	VPA, Contractors	EC, MOE	MOE	Complete	The BCRC *Trow EWP* includes mitigation for impacts to ditches.
Terrestrial Wildlife and Vegetation							
15	*The Owner will ensure that the land-based construction works for the off causeway rail corridor components of the Project are conducted in compliance with applicable legislative requirements and BMPs, with particular attention to storm water management on the sites during construction, excavation and disposal of fill and concrete works. Further the Owner must ensure that municipal community planning is reflected in mitigation of terrestrial and vegetation impacts along the rail corridor. This may include applicable permits for development along watercourses, permits to deposit or remove soil or other material, and environmental reviews of specific works in and around environmentally-sensitive areas.*	Pre-construction, Construction	VPA, Contractors, BCRC	MOE, EC	COD, TFN	Complete	BCRC provided *Environmental Work Plans* (*Mainland and Trow EWPs*) that addressed this commitment.
15.1	The Owner will comply with all terms and conditions of Permits, Approvals and Authorizations, and environmental BMPs.	Pre-construction, Construction	VPA, Contractors, BCRC	MOE, EC	COD, TFN	Complete	BCRC provided *Environmental Work Plans* (Mainland and Trow EWPs) that addressed this commitment.
15.2	The Owner will follow or have followed the Construction EMP for storm water management on the site during construction, in relation to material excavation and disposal of fill, concrete works, and other activities.	Pre-construction, Construction	VPA, Contractors, BCRC	MOE, EC	COD, TFN	Complete	BCRC provided *Environmental Work Plans* (Mainland and Trow EWPs) that addressed this commitment.
15.3	The Owner will ensure vegetation cleared during construction is kept to a minimum. This would maximize the habitat buffer between the edge of rail bed and adjacent habitats (e.g. ditches).	Pre-construction, Construction	VPA, Contractors, BCRC	MOE, EC	COD, TFN	Complete	The Port has been provided with the BCRC EWPs (Mainland and Trow EWPs) that address this commitment.

Ref	Objective - Commitments and Assurances	Timing	Delivered By	Approving/ Lead Agencies [2]	Advisory Agencies	Status	Comments
15.4	The Owner will re-vegetate areas disturbed by construction activities with native grass species. This would enhance native species in the study area and minimize the potential for establishment of non-indigenous species.	Pre-construction, Construction	VPA, Contractors, BCRC	MOE, EC	COD, TFN	Complete	BCRC provided *Environmental Work Plans* (Mainland and Trow EWPs) that addressed this commitment. Construction impacts to vegetated areas outside of the actual project footprint was very limited and revegetation was not an issue.
15.5	The Owner will minimize the movement of people and machinery through vegetated areas.	Pre-construction, Construction	VPA, Contractors, BCRC	MOE, EC	COD, TFN	Complete	BCRC provided *Environmental Work Plans* (Mainland and Trow EWPs) that addressed this commitment.
15.6	The Owner will manage interactions between employees/contractors and wildlife and will store and/or dispose of food, garbage and petroleum products in an appropriate manner to prevent attraction of wildlife to construction sites.	Pre-construction, Construction	VPA, Contractors, BCRC	MOE, EC	COD, TFN	Complete	BCRC provided *Environmental Work Plans* (Mainland and Trow EWPs) that addressed this commitment.
16	*The Owner must, through their Contractors, take every reasonable step to ensure that the landscape, vegetation, bushes and trees are protected during construction of the rail works.*	Pre-construction, Construction	VPA, Contractors, BCRC	COD	EC, TFN	Complete	BCRC provided *Environmental Work Plans* (Mainland and Trow EWPs) that addressed this commitment.
16.1	The Owner commits to meet the intent of COD's Official Community Plan policies regarding environmentally-sensitive areas, specifically sections 2.4.1 - 2.4.15 and 2.4.21 - 2.4.26.	Pre-construction, Construction	VPA, Contractors, BCRC	COD	EC, TFN	Complete	BC Rail track work at GULF - Corp. of Delta Environmental Officer (Angela Danyluk) was briefed by BC Rail on that project
16.2	The Owner must ensure that vegetation clearing is undertaken without contravening section 34 of the British Columbia *Wildlife Act*. In this regard, it is the Owner's responsibility to determine appropriate timing for vegetation clearing activities. If assistance is required in the determination of appropriate time periods, the owner will retain the services of appropriately qualified environmental professionals.	Pre-construction, Construction	VPA, Contractors, BCRC	MOE	EC, TFN	Complete	BCRC provided *Environmental Work Plans* (Mainland and Trow EWPs) that addressed this commitment.
16.3	The Owner will ensure that it is in compliance with the *Migratory Birds Convention Act* (MBCA), the *Species At Risk Act* (SARA), and the *Migratory Birds Regulations* (MBR) for the life-cycle duration of the Project.	Pre-construction, Construction	VPA, Contractors, BCRC	MOE	EC, TFN	Complete	BCRC provided *Environmental Work Plans* (Mainland and Trow EWPs) that addressed this commitment.
16.4	The Owner will support appropriate environmental stewardship programs to place barn owl nest boxes in areas towards Brunswick Point where they are less vulnerable to major motorways.	Pre-construction, Construction	VPA, Contractors	MOE	EC, TFN	On-going	In the absence of a formal environmental stewardship program, the Port is constructing barn owl boxes and working with SFU on their distribution.
16.5	The Owner will become involved in barn owl management planning, either through a Barn Owl Management Team, or its ad hoc equivalent.	Pre-construction, Construction	VPA, Contractors	MOE	EC, TFN	Complete	*See 16.4 above.*
16.6	The Owner will minimize impacts to foreshore marshes by adhering to the following mitigation measures: · - Where possible, minimize construction access across foreshore marshes and limit damage to riparian zone habitats; and.· - Avoid dredging and/or filling in marsh areas.	Pre-construction, Construction	VPA, Contractors, BCRC	MOE	EC, TFN	Complete	BCRC provided *Environmental Work Plans* (Mainland and Trow EWPs) that addressed this commitment.
Air Quality							
17	*The EAC Application Chapter 13.0 - Air Quality Assessment refers to the ambient air quality objectives. The Owner will ensure continuous improvement to air quality using applicable BMPs and available technology to meet applicable ambient air quality objectives.*	Construction, Operation	VPA, Contractors, Terminal Operator	GVRD	EC, COD, TFN, FHA, HC	On-going	*See comments below.*
17.1	The Owner commits to working with the GVRD, in consultation with the COD, to fund and locate an air quality station, in the local community to provide for continuous ambient air quality monitoring.	Construction, Operation	VPA, Contractors, Terminal Operator	GVRD	EC, COD, TFN, FHA, HC	Complete	The GVRD [now Metro Vancouver (MV)] chaired a committee of technical representatives from MV, EC, the Port, COD and TFN looking at specific air quality information for the selection of a suitable location for the air quality station. Following a number of delays, including the abandonment of a selected site due to planned seismic upgrade work by MV, a site in the Tsawwassen area of Delta was selected as the air quality station site. The Request for Quotes for the station trailer ended August 21, 2009 and instrument tenders went out in Fall 2009. The monitoring station has been up and running since April 2010. MV is managing the station and is currently in the process of correcting a data recording format issue so that the results will be compatable with the rest of the MV network. Once corrected, the data will be available on the website bcairquality.ca.
17.2	The Owner and the Terminal Operator must comply with the federal *Canada Wide Standards* (CWS), and specifically Annex A of the CWS Agreement, during construction and operation that commits the Owner and the Terminal Operator to "Continuous Improvement" and "Keeping Clean Areas Clean" (CI/KCAC). Where applicable, the GVRD's "*Air Quality Management Plan*, September 2005" and any subsequent changes to that document, and/or provincial or federal ambient air quality objectives, whichever is more stringent, will be used as the guide for ambient air quality objectives for the Project area.	Construction, Operation	VPA, Contractors, Terminal Operator	GVRD	EC, COD, TFN, FHA, HC	On-going	Port Metro Vancouver's Air Action Program addresses these air quality requirements not only for the project but on a Port-wide basis. The document outlining the Program is titled *"Air Action Program, Addressing Air Quality and Climate Change"*, dated June 2008, and is available on the Port's website as follows: http://portmetrovancouver.com/Libraries/ENVIRONMENT/2008-06-18_VFPA_Air_Action_Program.sflb.ashx
17.3	The Owner shall ensure that all contractors and the Terminal Operator construct and operate the Project with due attention to adverse public health effects.	Construction, Operation	VPA, Contractors, Terminal Operator	GVRD	EC, COD, TFN, FHA, HC	On-going	The public health effects related to air emissions are addressed in the Port's Air Action Program. The document outlining the Program is available on the Port's website as follows: http://portmetrovancouver.com/Libraries/ENVIRONMENT/2008-06-18_VFPA_Air_Action_Program.sflb.ashx. In addition, an Air Quality Impact Mitigation Plan was prepared and implemented for each phase of the construction works.
18	*The Owner must commit to develop a Construction Air Quality Mitigation Program that addresses all Project construction impacts on the ambient air quality in the Project area.*	Construction	VPA, Contractors, Terminal Operator	GVRD	EC, COD, TFN, FHA	Complete	*See comments below.*

Owner's Table of Commitments and Assurances[1]
Status Update as of January 31, 2011

Ref	Objective - Commitments and Assurances	Timing	Delivered By	Approving/ Lead Agencies [2]	Advisory Agencies	Status	Comments
18.1	This Program must cover the marine construction program (undertaken by the Owner) and the terminal construction program (undertaken by the Terminal Operator) and other relevant and project specific off-site road and rail improvements. The construction air quality program will include the following:· - On-road diesel fuel will be included in bid-tenders for use in off-road construction equipment.· - Diesel particulate filters and/or other appropriate retrofits where possible (such as automatic anti-idling shut-offs) will be used on all construction equipment and construction vehicles capable of use.· - Covered road vehicles will be used in the transport of bulk fine materials to or from the Project site.· - Paved sections of the worksite and roads that are subject to accumulations of dust will be wetted/cleaned on a regular basis.· - A worksite speed limit will be put in place to further reduce dust.· - An ongoing program of implementation of a worker education program to address:· - Engine idling reduction (including provision for automatic anti-idling shut-off mechanism, if feasible),· - Operation of equipment at optimum rated loads,· - Routine equipment maintenance procedures,· - Options to reduce construction worker trips (i.e., carpooling, transit, other non-polluting transportation modes),· - Visual inspections on a daily basis for potential dust and odour issues, and· - Potential for impacts from equipment exhaust, dust and odours.	Construction	VPA, Contractors, Terminal Operator	GVRD	EC, COD, TFN, FHA	Complete	Construction EMPs of the marine works (DCL in Section 3.0), upland civil works (TSI in Section 3.0), and BCRC track work at Gulf (BCRC in Section 2.9) all address these commitments.
19	*The Owner commits, and must ensure that the Terminal Operator also commits, to diligently work towards a reduction of emissions from container vessels calling at Deltaport [18].*	Operation	VPA, Terminal Operator	EC, GVRD	COD, TFN	On-going	*See comments below.*
19.1	The Owner confirms their willingness to continue to actively work with other ports, industry, regulators and other organizations to influence the IMO to create a "SOx Emission Control Area" (SECA)[19] for the West Coast where vessels must use fuel oil with a sulphur content of no more than 1.5% by 2009.	Operation	VPA, Terminal Operator	EC, GVRD	COD, TFN	On-going	This work is ongoing and is being lead by EC and TC with support by the Port. The amended Annex VI includes Emission Control Areas (ECAs) which include both SOx and NOx requirements (vs. a SECA which focussed solely on SOx). Canada has ratify Annex VI in conjunction with the United States under a North American ECA and comes into effect in 2012. The port continues development of the "Northwest Ports Clean Air Strategy" with the Ports of Seattle and Tacoma that will help bridge to an ECA. Also, the Port's Differentiated Harbour Dues Program includes incentives for using fuel with low sulphur content. Canada has passed regulations to enforce the previous Annex VI but still needs to develop regulations to enforce recent changes to Annex VI, in addition to ratification itself. The VFPA has voluntarily instituted the above-mentioned local initiatives and plans to continue providing mechanisms for continuous improvement of marine emissions below the ECA regulations.
19.2	The Owner commits to assessing a differential port tariff system where cleaner ships (less emitting) calling on the Port of Vancouver are charged lower fees as a reward system to encourage a reduction in marine vessel air emissions.	Operation	VPA, Terminal Operator	EC, GVRD	COD, TFN	Complete	The Port implemented a Differential Harbour Dues program, which became fully operational on April 1, 2007. The program provides incentives for cleaner, less emitting, marine vessels, including the use of lower sulphur fuels. Program details are available on the VFPA website.
19.3	The Owner commits to undertake a vessel speed assessment of marine vessels approaching Roberts Bank to determine the potential benefit of lowering vessel approach speeds with the intention to reduce potential impacts on marine mammals and air emissions.	Operation	VPA, Terminal Operator	EC, GVRD	COD, TFN	Implemented	The marine mammal monitoring program has assessed both the presence of killer whales and possible interactions and effects from ocean going vessels. With the designation of Southern Georgia Strait as critical killer whale habitat, VFPA is working with the Killer Whale Recovery Team on reducing potential impacts of activities such as drilling and dredging conducted within Port jurisdiction.
19.4	The Owner must ensure that the Terminal Operator commits to the incorporation of infrastructure for shore power for ships in the Project design and construction. Further the Owner must commit to complete a feasibility study for shore based power within 8 months of receipt of Project EA approval. The feasibility study will identify the ships currently calling on the Port of Vancouver capable of connecting to shore power, their power requirements as well as timelines and targets for potential conversions.	Operation	VPA, Terminal Operator	EC, GVRD	COD, TFN	Complete	The feasibility study for shore based power was completed in May 2007. Omni Engineering Inc. and Westmar Consultants Inc. were retained by TSI Terminal Systems Inc. to conduct the study, the findings of which are presented in a report titled "*Deltaport Third Berth Container Terminal, Cold Ironing Feasibility Study*", dated May 30, 2007. The study was submitted to the Environmental Assessment Office in June 2007.
20	*The Owner and Terminal Operator will use all reasonable efforts to reduce emissions from terminal operations and container trucks as described and concluded in the revised Application Chapter of December 2005.*	Construction, Operation	VPA, Contractors, Terminal Operator	EC, GVRD	FHA, COD, TFN	On-going	This commitment is addressed with the Port's Integrated Air Action Program and the Port's Truck Licensing Program. Additional information on the Truck Licensing Program is available on the VFPA's website at http://portmetrovancouver.com/Libraries/ENVIRONMENT/Port_Metro_Vancouver_Differentiated_Harbour_Dues_Program.sflb.ashx. Specific action items that address this commitment are outlined and reported on below.
20.1	The Owner will ensure the Terminal Operator uses ultra low sulphur diesel in off-road terminal equipment starting September 2006.	Construction, Operation	VPA, Contractors, Terminal Operator	EC, GVRD	FHA, COD, TFN	Complete	TSI commenced use of low sulphur (on road fuel quality) in September 2006. In addition TSI also implemented the use of biofuels in terminal equipment to further reduce emissions in August 2006.
20.2	The Owner will ensure the Terminal Operator uses diesel oxidation catalysts in all applicable Deltaport terminal equipment.	Construction, Operation	VPA, Contractors, Terminal Operator	EC, GVRD	FHA, COD, TFN	Complete	TSI has been using diesel oxidation catalysts in applicable equipment since 2006.
20.3	The Owner will ensure the Terminal Operator completes the testing of the hybrid powered rubber tired gantry cranes (RTGs) at Vanterm and if successful, ensure that the Terminal Operator retrofits existing RTGs at Deltaport.	Construction, Operation	VPA, Contractors, Terminal Operator	EC, GVRD	FHA, COD, TFN	Implemented	TSI has completed pilot tests with three hybrid RTGs, and the RTGs are in use at the Deltaport facility. Testing of the units indicated an approximately 70% fuel savings, and an even greater emissions reduction, over the non-hybrid RTGs.
20.4	The Owner or its security personnel must ensure that non-reservation trucks continue to shut down their engines while waiting in queue during times when the Deltaport Terminal gates are closed (i.e. currently before 7:00 AM, 12:00 PM to 12:30 PM, and after 4:00 PM). Signs should be posted along the causeway to inform truckers of the environmental benefits of turning off engines while in queue for extended time periods	Construction, Operation	VPA, Contractors, Terminal Operator	EC, GVRD	FHA, COD, TFN	Implemented	All trucks now require a reservation. The Port implemented an anti-idling program for all container trucks in September 2006 and extended this program to port operations in January 2007. A mandatory idling limit has been incorporated into the Truck Licensing System (TLS) starting in 2008 that mirrors the City of Vancouver idling by-law. The TLS requirement limits idling to no more than 3 consecutive minutes in a 60 minute period.
20.5	The Owner and Terminal Operator commit to full implementation of the container truck reservation system, which may include the use of extended terminal gate operating hours, to reduce congestion and emissions from container trucks calling on Deltaport.	Construction, Operation	VPA, Contractors, Terminal Operator	EC, GVRD	FHA, COD, TFN	Implemented	The Port and the Terminal Operator implemented the truck reservation system in 2002. Extended terminal gate operating hours were implemented by the terminal operator in 2005. Due to a decrease in volumes in 2008, night-gate openings were reduced. Since night-gates were reinstated in June 2009, the Terminal Operator operates 5 night-gates per week. In addition, TSI has also reallocated daytime truck reservations to night gates, implemented speed gates, added security staff, added an additional pre-gate checker, and started the daytime gate shift at 7AM. All trucks now require a reservation to call at Deltaport.
20.6	The Owner commits to using mechanisms such as the truck licensing system to implement strategies to reduce truck emissions such as promoting the use of the newest and cleanest trucks, as well as the use of retrofit technologies for trucks making frequent visits to Deltaport.	Construction, Operation	VPA, Contractors, Terminal Operator	EC, GVRD	FHA, COD, TFN	On-going	The truck licensing program (TLS) contains four components to address air emissions, and took effect on April 1, 2008. These components include: (a) phasing out trucks older than 1989; (b) increasingly stringent truck emission opacity standards; (c) mandatory idle reduction limits; and (d) a mandatory education program. Effective April 1, 2009, trucks older than 1994 were phased out. The next set of requirements for trucks older than 1999 will occur on April 1, 2011.

Ref	Objective - Commitments and Assurances	Timing	Delivered By	Approving/ Lead Agencies [2]	Advisory Agencies	Status	Comments
21	*The Owner must commit to work with the Railways serving the Project to reduce emissions due to rail operations at Roberts Bank*	Operation	VPA	TC	COD, GVRD, TFN, EC	In progress	The Port worked with Environment Canada and Metro Vancouver to develop the BC Locomotive and Rail Air Quality Work Group, which held it's first meeting in July 2008. A meeting was held at Viterra in Spring 2009, one of the Port's grain terminals where their new low emission multi-genset locomotive was demonstrated. The most recent meeting in April 2010, the group focused on locomotive idling activity and possible mitigation measures suitable for the region.
21.1	The Owner commits to working with the Railways to develop an Operational Rail Emission Reduction Program. Elements of this emission reduction program are outlined in Schedule 1 to this Table.	Operation	VPA	TC	COD, GVRD, TFN, EC	Complete	TC has entered into a Memorandum of Understanding with CP and CN to: 1) prepare an action plan for GHG emissions reduction; 2) meet 2010 greenhouse gas emission targets; 3) purchase only new locomotives meeting applicable Environmental Protection Agency (EPA) emission limits; 4) Retire 130 medium horsepower locomotives built between 1973-1999; 5) upgrade existing high horsepower locomotives when they are overhauled, to meet EPA emission limits; and 6) upgrade to Tier 0 existing 1973 or newer, medium horsepower locomotives when they are overhauled starting in 2010. Over time, this approach will achieve the results sought through this commitment, as rail operations are revised and new equipment purchased.
Noise, Dust and Vibration							
22	*The Owner will ensure that instructions are provided to their contractors throughout the pre-construction and construction phases to minimize possible effects related to noise, dust and vibration. The Owner must comply with the intent of COD Noise Bylaw No. 1906, 1972 and the Delta Zoning Bylaw (section 802)) to avoid disturbance of the local community with 24 hour -7 day per week construction periods.*	Pre-construction, Construction	VPA, Contractors	FHA GVRD, COD,FHA	HC, TFN , EC	Complete	*See comments below* that provide responses to specific mitigation measures that achieve this goal.
22.1	The Owner will ensure that the Construction and Operation EMPs and BMPs are complied with, as indicated in Table 20.1 of the EAC Application and reflected in this Table.	Construction, Operation	VPA, Contractors	FHA GVRD, COD,FHA	HC, TFN , EC	Complete	Construction Noise Management Plans were prepared as a component of the Construction Environmental Management Plans for each phase of construction (see Section 2.7 of this table). VFPA also conducted periodic noise monitoring during construction. Hemmera provided construction environmental monitoring services during the construction phase of the program, with weekly environmental monitoring reportssubmitted to DFO, EC, CWS, and MOE, amongst others. In addition, a project feedback telephone line, 604-665-9337, is available to the public. Project related issues, including noise, dust and vibrations, are recorded along with their VFPA responses and mitigation measures, where applicable. The issues tracking tables are available on the VFPA website[24] at http://portmetrovancouver.com/projects/ongoing_projects/Deltaport_Third_Berth_Project/Project_consultation.aspx. The environmental monitoring program and the public issues feedback and response mechanism are two ways in which the VFPA attempts to ensure the EMPs and BMPs are being complied with.
22.2	The Owner will incorporate BMP and mitigation measures reflected in this Table into the contract documentation for construction contractors, including the requesting of low emission equipment.	Pre-construction	VPA, Contractors	FHA GVRD, COD,FHA	HC, TFN , EC	Complete	BMPs and mitigation measures were included in the contract documentation for the Project and are reflected in the EMPs implemented by the construction contractors. See Section 2 for additional information on the EMPs.
23	*The Owner shall ensure that all contractors and the Terminal Operator construct and operate the Project with due attention to adverse public health effects.*	Construction, Operation	Owner, Contractors, Terminal Operator	FHA	HC, COD, TFN	On-going	*See comments below.*
23.1	The Owner shall commit to organizing a Community Liaison Committee referenced in section 6.3 of this Table, with a sub-committee on noise issues, with the participation of VPA, the Terminal Operator, COD and the Railways, specifically focusing on rail noise impacts and public concerns, such as whistles, train shunting and speed. The terms of reference for this committee shall be developed by the Owner and accepted by government regulators, TFN and COD prior to start of construction.	Construction, Operation	Owner, Contractors, Terminal Operator	FHA	HC, COD, TFN	Implemented	The DCLC is made up of eighteen members, including a representative from the Port, TSI, COD and TFN. The Terms of Reference has been adopted by the committee. The purpose of the committee is to work with the Port and port stakeholders to address issues pertaining to the construction and first-year operation of the project. The first meeting was held on March 22, 2007. Subsequent meetings in 2007 were held on April 19, May 1, June 11, June 26, July 3, September 6, October 25, and November 29. Meetings in 2008 were held on January 17, February 28, April 24, June 26, August 28, October 23 and November 27. Meetings in 2009 were held on January 22, February 19, April 16, June 18, September 17 and November 19. Meetings in 2010 were held on January 21, March 30, May 27, June 24, September 23 and December 2. The DCLC formed a noise subcommittee in June 2009 to address noise concerns. This subcommittee operates under the general DCLC Terms of Reference. BCRC has agreed to attend and participate in meetings when requested by the committee as a whole or by the noise subcommittee. Information pertaining to the DCLC, including the Terms of Reference and meeting minutes is available at http://www.portmetrovancouver.com/projects/ongoing_projects/ Deltaport_Third_Berth_Project.aspx or http://www.delta3berthinfo.org/.
23.2	The Owner will prepare a Construction Noise Management Plan containing environmental management measures to assess and minimize noise from the construction of the Project. Mitigation measures for terminal construction would include:· - Machinery noise control - a maximum allowable noise emission from each type of machinery set prior to construction to ensure that contractors do not utilize any excessively noisy equipment; and· - Awareness and training - Provision of training to ensure that construction workers are aware of the noise created during construction and are appropriately trained to minimize noise.	Construction, Operation	Owner, Contractors, Terminal Operator	FHA	HC, COD, TFN	Complete	Construction Noise Management Plans have been prepared as a component of the Construction Environmental Management Plans for each phase of construction (see Section 2.7 of this table). VFPA also conducted periodic noise monitoring during construction and has worked with the DCLC noise sub-committee on these issues. As a result of noise monitoring conducted during construction, dredge equipment were outfitted with mufflers to aid in dampening the noise. Noise levels from construction equipment met the CMHA guidelines.
23.3	A management procedure, such as a 24-hour helpline, will be put in place by the Owner to deal with noise complaints that may arise from construction activities. Each complaint would be investigated and appropriate noise reduction measures established to mitigate future occurrences.	Construction, Operation	Owner, Contractors, Terminal Operator	FHA	HC, COD, TFN	Implemented	A project information and feedback line is available to the public. The project information and feedback line number is 604-665-9337. The number is advertised on the project web site, project newsletters, project advisory notifications and will also be available on other collateral material that is produced for the project. All complaints are documented and directed to the appropriate team member. Issues and responses are tracked in the DP3 Public Issues Tracking document, which is available to the public on the project website or in public library resource files (Delta, Surrey and Langley).
23.4	The Owner will ensure that the Terminal Operator prepares an *Operation Noise Management Plan* containing environmental management measures to assess and minimize noise from the operation of the Project. The Plan would be included in the Operational EMP for the Deltaport Third Berth Project. Mitigation measures for terminal operations would include: *Equipment Alarms* - New ship-to-shore gantry cranes and rail mounted gantries will be purchased with "alarms" that will be normally inaudible on shore.	Operation	Owner, Terminal Operator	FHA	HC, COD, TFN	Complete	TSI have finalized their Operation EMP, which includes a noise management plan.
23.5	The Owner will ensure that the Terminal Operator must conduct regular training of Operator awareness. Proper training and awareness of noise issues will be implemented to minimize noise associated with the operation of the proposed Project.	Operation	Owner, Terminal Operator	FHA	HC, COD, TFN	Implemented	TSI's revised Operation EMP includes a number of Environmental Management Plan Procedures (EMPP) including plans for 'New Employee Orientation' (EMPP-12-01) and 'Training Needs Assessment and Planning' (EMPP-13-01).
24	*The Owner will ensure that the design, construction, operation and maintenance of the Project attempts to minimize any public health concerns associated with the Project.*	Pre-construction, Construction, Operation, Maintenance	VPA	HC, FHA, COD, TFN	EAO	On-going	See comments below for information on individual commitments.

Ref	Objective - Commitments and Assurances	Timing	Delivered By	Approving/ Lead Agencies [2]	Advisory Agencies	Status	Comments
24.1	The Owner will ensure that construction contractors are aware of their obligations to comply with all applicable standards and regulations regarding the handling and use of any hazardous materials that they may be using during construction (e.g., uncured concrete).	Pre-construction, Construction, Operation, Maintenance	VPA	HC, FHA, COD, TFN	EAO	Complete	The contractors have each developed a plan within their respective Construction EMPs that addresses this issue. Independent environmental monitoring has been conducted during the marine and upland phases of construction. No issues with this commitment were identified during monitoring activities. Construction is now complete.
	Other public health issues must be observed as reflected in other sections of this Table.						The individual consultants and contractors have their own Health and Safety Plans.
Visual/Lighting							
25	*The Owner shall ensure that all contractors and the Terminal Operator construct and operate the Project with minimal adverse visual and lighting effects.*	Construction, Operation	VPA, Terminal Operator	none	COD, TFN	On-going	*See comments below.*
25.1	The Owner shall commit to organizing a CLC referenced in section 6.3 of this Table, whose terms of reference shall include any visual and lighting impacts generating public concerns. The Owner shall develop a 24-hour help line for visual/lighting concerns/events, enabling contractors and terminal personnel to identify what events and operations are causing adverse impacts in the Tsawwassen communities, including the TFN Reserve.	Construction, Operation	VPA, Terminal Operator	none	COD, TFN	On-going	The DCLC is made up of eighteen members, including a representative from the Port, TSI, COD and TFN. The Terms of Reference has been adopted by the committee. The purpose of the committee is to work with the Port and port stakeholders to address issues pertaining to the construction and first-year operation of the project. The first meeting was held on March 22, 2007. Subsequent meetings in 2007 were held on April 19, May 1, June 11, June 26, July 3, September 6, October 25, and November 29. Meetings in 2008 were held on January 17, February 28, April 24, June 26, August 28, October 23 and November 27. Meetings in 2009 were held on January 22, February 19, April 16, June 18, September 17 and November 19. Meetings in 2010 were held on January 21, March 30, May 27, June 24, September 23 and December 2. Information pertaining to the DCLC is available at http://www.portmetrovancouver.com/projects/ongoing_projects/ Deltaport_Third_Berth_Project.aspx or http://www.delta3berthinfo.org/. A project information and feedback line is available to the public. The project information and feedback line number is 604-665-9337. The number is advertised on the project web site, project newsletters, project advisory notifications and will also be available on other collateral material that is produced for the project. All complaints are documented and directed to the appropriate team member. Issues and responses are tracked in the DP3 Public Issues Tracking document, which is available to the public on the project website or in public library resource files (Delta, Surrey and Langley).
25.2	The Owner must ensure the dredge lighting system shields light from spilling outside the basic working footprint of the dredge.	Construction, Operation	VPA, Terminal Operator	none	COD, TFN	Complete	Addressed in Contractors (DCL) EMP and their dredging timing plan. VFPA did not receive any complaints regarding the dredge lighting, however, there were some complaints about noise from the dredging operations. The contractor was required to place additional muffler equipment on the dredge, which appeared to improve the situation (based on a reduction in noise complaints).
25.3	The Owner will ensure that the Terminal Operator undertakes the following measures:· - Ensure lighting equipment is pointed north and west, where possible, to reduce impacts to residents who are typically located east and south of the Roberts Bank port facility.· - Implement shielding on construction lighting.· - Use downlight style, cut-off luminaries for illumination of wharf and container yard areas.· - Use less intrusive lighting sources such as metal halide luminaries exclusively for illumination of new wharf and container yard areas.· - Reduce the amount of lighting during periods of low activity using lighting control systems.· - Incorporate an automatic light shutdown system when the booms of new ship-to-shore gantry cranes are raised and inactive for longer than 15 minutes.	Operation	VPA, Terminal Operator	none	COD, TFN	On-going	The Terminal Operator has committed to the following design elements: central site lighting will use downlighters or light deflectors; perimeter lighting will be directed inwards into the Terminal site (the type of light is yet to be determined); security lighting will only be used during non-working hours; and, minimal night time construction is proposed. A lighting design report was presented to the Delta Community Liaison Committee on November 27th, 2008 for review and comment. It was subsequently reviewed by a consultant for the COD and that review was discussed by the DCLC at its January 22, 2009 meeting. The final lighting report has been submitted to the DCLC and VFPA. The Terminal Operator continues to address these commitments through on-going work with the DCLC and VFPA. Recent updates on lighting at Deltaport were provided to the DCLC by TSI on March 30, 2010 and on June 24, 2010 when Eric Watz, President of TSI, attended the DCLC meeting. TSI also operates a 24-hour telephone line at 604.215.5773 where community members can reach operations staff, so that lighting issues can be more quickly addressed. Lights on the North and East sides of the third berth site have been set a reduced angles, and TSI has committed to tilting down the lights on DP1 and DP2. TSI does not have the resources to adjust all of the lights at one time, but has issued a standing order for staff to verify and adjust the angle of light fixture on DP1 and DP2 during routine maintenance of these lights. Construction is now complete. TSI has reduced the angle of lights at East and North sides to 55 degrees (60 degrees recommended by consultant), and TSI has committed to continue to test and adjust lights that are angled above the recommended level. A standing order has been issued to TSI staff for the adjustment of the angle of light fixture during routine maintenance activities. Lighting has been designed for an average of 50 lux as required by Human Resource Development Canada (HRDC). Some dark spots remain on the terminal, which will be re-surveyed and possibly adjusted as container ships are loaded/unloaded. TSI is limited in how much they can reduce the lighting in this area due to regulatory requirements. TSI has commited to create a "security setting" option, which will result in the majority of lights shutting off when the port is not in operation. Automatic shutdown of these lights has been implemented. Boom lights will not be on during raising and lowering of the boom, therefore eliminating light throw from this source during these operations.
25.4	The Owner will evaluate the use of innovative mounting systems for lighting on ship-to-shore gantry cranes to minimize light throw during raising and lowering of the equipment. The Owner will examine options for mounting luminaries on the arms of ship-to-shore gantry cranes to prevent them from rotating when the arms are raised and lowered.	Operation	VPA, Terminal Operator	none	COD, TFN	On-going	The Operator has indicated that due to operational changes, boom lights will not be on during raising and lowering of the boom, therefore eliminating light throw from this source during these operations. If these lights are on when the cranes are up it is because work is being done on them or because there is a hardware failure. A standing order has been issued to TSI staff for the inspection and maintenance of the gantry lights so that lights that are not functioning properly can be serviced.
25.5	The Owner will consider change of gantry crane colour and, where practical, options for a landscape buffer strip to be established along the outer edge of the Roberts Bank causeway.	Operation	VPA, Terminal Operator	none	COD, TFN	Complete	The three new Quad Cranes are white. This was deemed to be the best overall colour to satisfy the need for landscape buffering and aesthetics as well as for providing adequate visual recognition for aircraft safety. As an added benefit, stress cracks and fractures are clearly revealed on white and thus assist with maintenance and safety inspections.
Socio-economic/Socio-community Issues and Economics							
26	*The Owner will ensure that consideration is given to enhanced socio-economic aspects of the Project. If the Owner transfers the EAC to the Terminal Operator, the Owner will ensure the transfer to the Terminal Operator of all relevant commitments, including but not limited to those listed in this Table.*	Pre-construction, Construction, Operation	VPA, Terminal Operator	none	GVRD, COD, TFN, TransLink	On-going	The Owner will ensure that consideration is given to enhanced socio-economic effects as outlined in the specific commitments below, and that any transfer of the EAC to the Terminal Operator will also ensure the transfer of all relevant commitments.
26.1	The Owner will develop a community liaison plan to minimize construction-related impacts. The plan will ensure that adequate notification is provided and will be developed with meaningful consultation with COD and TFN. This community liaison plan shall provide opportunities for the local community, COD and TFN to provide meaningful input throughout the final design, construction and first year of operation, and it will also result in a CLC, both as discussed in section 6 of this Table.	Pre-construction, Construction, Operation	VPA, Terminal Operator	none	GVRD, COD, TFN, TransLink	Complete	A Draft Community Liaison Plan (CLP) was sent to the EAO in December 2006 for review. A copy of the CLP was sent to the Corporation of Delta and TFN on January 15, 2007 for review and comment, and the plan has since been adopted. The CLP includes tactics to minimize construction-related impacts on the community including: the formation of DCLC, project feedback and information line, feedback mechanisms, newsletters, public events, project advisories and other communications, as required. The CLP can be viewed on the VFPA website at http://portmetrovancouver.com/Libraries/PROJECTS_Deltaport_Third_Berth_Project/2006-12-12_Community_Liaison_Plan_Construction_First_Year_Operation_Phase_amended_2009-04-23_FINAL.sflb.ashx.

Ref	Objective - Commitments and Assurances	Timing	Delivered By	Approving/ Lead Agencies [2]	Advisory Agencies	Status	Comments
26.2	The Owner will ensure that the Project implementation team[21] designs, constructs and operates the Project with care and attention provided to transportation and traffic considerations, so as to minimize and mitigate negative impact and effects. The Owner will resolve Project related transportation and traffic issues in consultation with COD and TFN.	Pre-construction, Construction, Operation	VPA, Terminal Operator	none	GVRD, COD, TFN, TransLink	Complete for Berth3 Construction; Ongoing for East Causeway Habitat Compensation works.	The Port's marine works construction contract specified that all general fill, preload, granular sub-base and aggregate base course materials shall be imported by waterborne transport. This is estimated to have reduced project-related traffic on nearby roads by approximately 300,000 single dump truck loads, i.e. 300,000 return trips (600,000 one-way trips) on nearby roads. To date, most project materials have been imported by water and waste materials have been exported by water. The Marine Works contractor was allowed to truck up to 50,000 m^3 of surplus preload to a South Fraser Perimeter Road (SFPR) site within Delta, since that created less traffic and emissions impact within Delta than the previous fill source for that site. Only 38,000 m^3 was actually taken to the SFPR site. The Port and TSI have built a temporary barge berth for importing materials needed for the East Causeway habitat compensation works and for TSI's pavement foundations, as well as to remove material excavated from the East Causeway as part of the compensation works. This is expected to have eliminate approximately 24,500 return truck trips through Delta. In addition, operational traffic management improvements, Highway 17 improvements and road-rail interface improvements (see Section 7 of this table) will aid in easing congestion from third berth operations.
26.3	The Owner will ensure that the Project implementation team designs, constructs and operates the Project with care and attention to the provision of emergency services to the Project. The Owner will resolve issues in consultation with COD as the Project design and infrastructure is finalized.	Pre-construction, Construction, Operation	VPA, Terminal Operator	none	GVRD, COD, TFN, TransLink	Complete	Construction is complete.
26.4	The Owner will ensure that the Project implementation team designs, constructs and operates the Project in accordance with applicable bylaws and codes.	Pre-construction, Construction, Operation	VPA, Terminal Operator	none	GVRD, COD, TFN, TransLink	Complete	Following completion of construction, the VFPA will receive P.Eng. signed as-built drawings, which will provide confirmation that the works were built to the applicable codes. The Port has issued a permit to TSI for the Deltaport Third Berth finishing works (upland terminal construction), which requires them to construct according to all applicable laws and other necessary approvals.
26.5	The Owner will participate in Transport Canada's assessment of the Roberts Bank rail corridor to identify and seek solutions to rail crossing issues in Delta, Surrey and Langley.	Pre-construction, Construction, Operation	VPA, Terminal Operator	none	GVRD, COD, TFN, TransLink	Complete	The Roberts Bank rail corridor assessment was completed in early 2007, and the results were documented in a report titled "Roberts Bank Rail Corridor: Road/Rail Interface", dated February 2007. The study was coordinated by Transport Canada with other participants including MOT, TransLink, Greater Vancouver Gateway Council and the Port. The Port continues to actively participate in ongoing discussions with Transport Canada to advance the projects identified in the Rail Road Interface Study in the affected communities. Each project has a Project Steering Committee and technical committees that meet monthly, at a minimum, and the overall Program partnership meets once a quarter, at a minimum. Preliminary and deailed design for all projects are currently underway for completion by the end of 2010 (estimated).
26.6	The Owner and the Terminal Operator will use reasonable efforts to transport construction materials to and waste materials from the Project by barge to minimize additional highway traffic.	Pre-construction, Construction, Operation	VPA, Terminal Operator	none	GVRD, COD, TFN, TransLink	On-going	The Port's marine works construction contract specified that all general fill, preload, granular sub-base and aggregate base course materials was to be imported by waterborne transport. This is estimated to have reduced project-related traffic on nearby roads by approx. 300,000 single dump truck loads, i.e. 300,000 return trips (600,000 one-way trips) on nearby roads. Mmost project materials were imported by water and waste materials were exported by water. The Marine Works contractor was allowed to truck up to 50,000 m^3 of surplus preload to a South Fraser Perimeter Road (SFPR) site within Delta, since that created less traffic and emissions impact within Delta than the previous fill source for that site. Only 38,000 m^3 was actually taken to the SFPR site. The Port and TSI built a temporary barge berth for importing materials needed for the East Causeway habitat compensation works and for TSI's pavement foundations, as well as to remove material excavated from the East Causeway as part of the compensation works. This is expected to have eliminated approx. 24,500 return truck trips through Delta.
26.7	The Owner will monitor the impact of construction activities on community services such as fire, police and emergency response during construction and commits to discuss appropriate levels of emergency access to the Project with COD.	Pre-construction, Construction, Operation	VPA, Terminal Operator	none	GVRD, COD, TFN, TransLink	On-going	The Port will coordinate regular meetings with fire, ambulance, police and emergency response providers to review emergency access to the site and monitor use of services.
26.8	The Owner and Terminal Operator will use reasonable efforts to purchase goods and services and source employment in the local community during construction and operation of the Project.	Pre-construction, Construction, Operation	VPA, Terminal Operator	none	GVRD, COD, TFN, TransLink	Complete	Delta-based Graham Construction & Engineering is a partner in the joint venture firm (Deltaport Constructors Ltd) to which the Port awarded the $195 million marine works contract. That contract includes requirements to provide significant employment and contracting opportunities for the TFN**,** which has been done through over 15 person years of employment and over $1.5 million in direct construction contracts.
26.9	The Owner shall continue to participate in discussions with the Gateway Program, COD and other agencies regarding regional solutions to potential road and traffic issues in Delta.	Pre-construction, Construction, Operation	VPA, Terminal Operator	none	GVRD, COD, TFN, TransLink	On-going	Delta Council passed a resolution on January 12, 2009 to generally support the construction of an overpass at 41B Street (and closure of 57B) and Deltaport Way subject to confirmation of integration between Tsawwassen First Nation's Road Network Plan and Delta's Road Network. Also, Delta Council endorsed the plan presented by Delta Engineering (and supported by the DFI) for an overpass on 28th Ave. (See comment 7.1). PMV continues to participate in ongoing discussions with relevant agencies regarding regional truck routes. More recently, VFPA confirmed its support for overnight truck traffic restrictions on Ladner Trunk Road. VFPA notes that this is a temporary measure and that a full prohibition of through truck traffic would be implemented upon completion of the South Fraser Perimeter Road in 2012. 41B and 28th Avenue projects are currently under construction.
26.10	The Owner will construct traffic improvements as described in Section 7.1.	Pre-construction, Construction, Operation	VPA, Terminal Operator	none	GVRD, COD, TFN, TransLink	Some complete, others on-going	*See 7.1 for comments.*
Accident and Malfunctions							
27	*The Owner must ensure that all commitments designed to prevent or minimize accidents and malfunctions resulting from the Project are implemented.*	Design, Construction, Operation	VPA, Contractors, Terminal Operator	TC, EC, COD	GVRD		*See comments below.*
27.1	The Owner will ensure that the transport and storage of dangerous goods is carried out in compliance with the federal *Transportation of Dangerous Goods Act* (TDG). All dangerous goods transported by water within the Port of Vancouver must also be under permit issued by the Harbour Master Office.	Pre-construction, Construction, Operation	VPA, Terminal Operator	none	GVRD, COD, TFN, TransLink	Implemented	The Port continues to commit to the observation and enforcement of the *Transportation of Dangerous Goods Act* .
27.2	The Owner will observe the International Convention for the Prevention of Pollution from Ships (MARPOL), and MARPOL Annex V.	Pre-construction, Construction, Operation	VPA, Terminal Operator	none	GVRD, COD, TFN, TransLink	Implemented	The Port continues to commit to the observation and enforcement of MARPOL.

Ref	Objective - Commitments and Assurances	Timing	Delivered By	Approving/ Lead Agencies [2]	Advisory Agencies	Status	Comments
27.3	The Owner will ensure that the following fuelling and spill measures are committed to by all contractors and the Terminal Operator:· - Conduct fuelling of equipment and storage of petroleum products (e.g. fuel, oil, lubricants) over and adjacent to the marine environment in an appropriate manner and handle in compliance with all applicable guidelines, legislation, and best management practices.· - Have an appropriate spill prevention, containment and cleanup contingency plan for hydrocarbon products (e.g., fuel, oil, hydraulic fluid, lubricants), and all other deleterious substances used in association with the Project.· - The spill prevention, containment and cleanup contingency plan will be put in place prior to work commencing at the Project site. · - Be required to have appropriate containment and clean up materials on site throughout the course of work on the Project. · - Submit contractor's spill prevention, containment and cleanup contingency plans to the appropriate regulatory agencies for review prior to work commencing.· - Comply with the operator's Fuel Management and Dispensing Operating Procedure, which is part of the existing Deltaport Terminal *Environmental Management Plan* .· - Conduct fuelling for road container trucks or employee vehicles off-site, away from the existing Deltaport Container Terminal at approved fuelling facilities.	Pre-construction, Construction, Operation	VPA, Terminal Operator	none	GVRD, COD, TFN, TransLink	Implemented	The commitments can be found in the respective Contractor's construction EMPs (see Section 2). In addition, an independent Environmental Monitor has been employed by the VFPA and/or TSI during the construction phases of this Project. The environmental monitoring reports were submitted to DFO, EC, CWS and MOE, amongst others during the course of construction work.
27.4	The Owner will ensure that the contractor has a *Waste Management Plan* in place to ensure that all waste and deleterious materials generated by construction of the Project are appropriately contained in the immediate work area, collected, and appropriately disposed of in accordance with all applicable legislation, guidelines, and best management practices. The Owner will enforce procedures for collection and disposal of ship board waste as a requirement of the Project. The Owner will ensure that the Terminal Operator's waste management EMP is updated to include the Project and use the operator's established environmental procedures for items used at the terminal.	Pre-construction, Construction, Operation	VPA, Terminal Operator	none	GVRD, COD, TFN, TransLink	Complete	Addressed as a component of each Contractor's construction EMP. In addition, an independent Environmental Monitor was employed by the VFPA and/or TSI during the construction phases of this Project. The environmental monitoring reports were submitted to DFO, EC, CWS and MOE, amongst others during the course of construction work.
27.5	The Owner and Terminal Operator will ensure that their contractors develop a health and safety plan for each component of contractor work prior to the start of construction. The health and safety plan would typically include:· - Site location and prime contacts;· - Local emergency and project contact numbers;· - Description and map of emergency routes;· - Safety equipment required;· - List of site hazards and mitigation;· - Potential waste generation and disposal methods; and· - Outline emergency response procedures to be followed during construction in the health and safety plan.	Pre-construction, Construction, Operation	VPA, Terminal Operator	none	GVRD, COD, TFN, TransLink	Complete	The Port required each Contractor/Consultant to have a Health and Safety Plan prior to working on site. To date, all have complied with this commitment, and the Port has received copies of the plans. This requirement will remain for all future Contractors/Consultants working on site.
27.6	The Owner and the Terminal Operator will enforce the following design, measures:· - Design storm drainage systems to consist of a combination of catch basins, slot drains and open cover manholes; · - Locate storm drains in areas to avoid equipment operating areas and runways;· - Design drainage structures to withstand loads from the container operating equipment;· - Grade the container yard in the direction parallel to the RTG runways with drainage grades of 1% or less;· - Design drainage systems to accommodate rainfall flows generated from a 1 in 10 year rainstorm;· - Direct stormwater from the DP3 Terminal through an oil interceptor and catch basin to collect possible contaminants prior to discharging storm water effluent to the ocean;· - Ensure that the eight existing storm outfalls, located along the northern perimeter of Deltaport, will be decommissioned and replaced by new storm outfalls; and· - Ensure that the new storm outfalls will be fitted with shut-off valves to terminate flow from the Project are should a spill occur on the terminal.	Pre-construction, Construction, Operation	VPA, Terminal Operator	none	GVRD, COD, TFN, TransLink	Complete	The Terminal Operator confirmed commitment to these design measures via email on February 12, 2007. The drainage installation has been completed. The storm drain outfalls located along the northern perimeter of Deltaport were temporarily re-routed to a new temporary perimeter drain and their flows passed through interceptors before discharge. They have been replaced with new storm outfalls. As-built drawings have been received and are currently under review.
27.7	The risk of ship collisions or grounding will be minimized through observation of the *International Regulations for the Prevention of Collision at Sea* (ColRegs). The Owner will observe requirements of the *Transportation of Dangerous Goods Act* , and the *Canada Shipping Act* .	Pre-construction, Construction, Operation	VPA, Terminal Operator	none	GVRD, COD, TFN, TransLink	On-going	The Owner is committed to high standards of port safety and works with regulatory agencies and other partners, such as various branches of Transport Canada, Pacific Pilotage Authority and BC Coast Pilots, to continue to comply with acts and regulations that govern marine transportation, including the *Canada Shipping Act* and *Transportation of Dangerous Goods Act*.
Disposal at Sea							
28	*Based on information available in the EAC Application ocean disposal of dredged material will be required. The Owner will be responsible for all required regulatory approvals pursuant to the Disposal at Sea Regulations (2001) under the Canadian Environmental Protection Act, 1999.*	Pre-construction, Construction	VPA, Contractors	EC	COD, TFN	Complete	The initial Ocean Disposal Permit (#4543-2-03414) received from EC was dated January 2, 2007. An amendment to the Permit was received from EC on July 09, 2007 for a volume change not to exceed 690,000 cubic meters. A second amendment to the Permit was received from EC on December 03, 2007 for a change to the expiration of the Permit, from April 17, 2007 to April 16, 2008. A second Ocean Disposal Permit (#4543-2-03449), dated March 17, 2008, was received from EC for a volume of 20,000 cubic meters. Non-compliances with the Permits occurred in 2007 and 2008, including ocean disposal outside of the authorized disposal site and disposal in exceedance of the permit limit. VFPA self-reported the non-compliances to EC and DFO immediately upon learning of the incidents and has been cooperating with EC to investigate the incidents. In addition, VFPA implemented additional checks and balances to minimize the potential for additional non-compliances. These included requiring the contractor to provide daily reports on ocean disposal activities and requiring them to retain an independent marine surveyor during disposal activities.

Owner's Table of Commitments and Assurances[1]
Status Update as of January 31, 2011

Ref	Objective - Commitments and Assurances	Timing	Delivered By	Approving/ Lead Agencies [2]	Advisory Agencies	Status	Comments
28.1	The Owner must ensure that if required by the EC Disposal at Sea Program staff, the Contractors have Disposal at Sea Program staff on site during sampling of any material proposed for disposal at sea; the Owner must provide the results of chemical analysis to the Program; the Program will then consult with the Regional Ocean Disposal Advisory Committee and if the results are acceptable, the Contractor may apply for a Disposal at Sea Permit under the direction of the Owner.	Pre-construction, Construction	VPA, Contractors	EC	COD, TFN	Complete	Not required. Ocean Disposal Permit issued on January 2, 2007.
Miscellaneous Commitments and Assurances							
29	The Owner commits to adhere to, or in the transfer of responsibilities to the Terminal Operator, ensure such contractual compliance, with all mitigation proposals, relevant to the Project, that are described in the Application, or reflected in all other Owner generated documents listed in Appendix A to this Assessment Report or otherwise defined in this Table.	Construction, Operation, Maintenance	VPA, Terminal Operator		All listed	On-going	The Port confirms commitment to compliance.

Notes:

1. **(1)** The "Owner" is understood to mean the applicant for an environmental assessment certificate (Certificate) pursuant to BCEAA (i.e. Vancouver Port Authority – VPA) and to whom the Certificate may be issued. Any transfer of commitments and assurances in this Appendix E by the Owner to a selected third party, such as the current terminal operator (TSI Inc.), must comply with all conditions of the Certificate. A potential full transfer of the Certificate and its conditions to TSI, if contemplated - as the new "Owner" - requires a name change for the holder of the Certificate and necessitates an Amendment to the Certificate. **(2)** The Owner has also confirmed their Summary of Potential Impacts and Mitigation Measures in Section 20 of the EAC Application, Table 20.1. The relevant commitments in Table 20.1 are superseded by this Appendix E. **(3)** In accordance with the Certificate of Amalgamation issued under Part 5.1 of the Port Authorities Management Regulations pursuant to the *Canada Marine Act* and having an effective date of January 1, 2008, the Vancouver Fraser Port Authority is the successor to the Vancouver Port Authority, the Fraser River Port Authority and the North Fraser Port Authority.
2. Abbreviations of Approving and Advisory Agencies: Agency = Canadian Environmental Assessment Agency; ALC = Agricultural Land Commission; COD = Corporation of Delta; CWS = Canadian Wildlife Service; DFO = Fisheries and Oceans Canada; EAO = BC Environmental Assessment Office; EC = Environment Canada; FHA = Fraser Health Authority; GVRD = Greater Vancouver Regional District; FN = First Nations; HC = Health Canada; MCS = Ministry of Community Services; MOE = Ministry of Environment; MOT = Ministry of Transportation; NRCan = Natural Resources Canada; TFN = Tsawwassen First Nations; TC = Transport Canada
3. Those that are technically and economically feasible, as determined by VPA and acknowledged by the Approving Agencies and as defined specifically in other sections of this Table.
4. Assumed to be the current terminal operator, TSI Inc.
5. EAC = Environmental Assessment Certificate
6. As discussed in section 21 of the EAC Application.
7. A requirement under EC's "Disposal at Sea Permit for Dredged Material".
8. For further details, see section 4 below.
9. Emergency Planning for Industry, Major Industrial Accidents, Canadian Standards Association, CAN/CSA-Z731-95. CSA Internet site: http://www.csa.ca/standards BC Guidelines for Industry Emergency Response Plans (revised from 1992) http://www.env.gov.bc.ca/eemp/industcplan.html
10. See also section 22.
11. "Vancouver Port Authority. Deltaport Third Berth. Proposed Habitat Compensation". DATE
12. See section 4 of this Table.
13. Defined in section 21.2.3 of the EAC Application
14. Consisting of a Ballast Water Management Plan, a Bilge Water Protocol and an Emergency Response Plan
15. The legal instrument is under negotiation between the parties. The key document addressing Project impact issues are contained in Schedule B to the Agreement, providing details of the AMS.
16. EAO's Deltaport Third Berth Project Assessment Report of DATE, PART A, section 1.4.1
17. The VPA undertook a revision of the EAC Application Air Quality chapter, which was distributed to reviewers in December 2005.
18. Initiatives related to reducing air emissions are outlined in letter correspondence dated October 18, 2005 from Alicia Blancarte, VPA to Morris Mennel, EC and Hugh Kellas, GVRD and letter correspondence dated September 30, 2005 from Joe Murphy, TSI to Jim Cox, VPA.
19. The International Convention for the Prevention of Pollution from Ships (MARPOL) is the main international convention of the International Marine Organization (IMO) covering prevention of pollution of the marine environment by ships from operational or accidental causes. The SOx emission limits of Annex VI of MARPOL include a global cap of 4.5% on a mass basis of the sulphur content of fuel oil used on board ships and establishment of "SOx Emission Control Areas" (SECAs) where vessels must use fuel oil with a sulphur content of no more than 1.5% on a mass basis or fit an exhaust gas cleaning system or use any other technological method to limit SOx emissions to ≤ 6 g/kWh (as SO_2 mass). However, the EA process can not fetter other national and international legislation and measures to introduce new SECAs.
20. Posted on EAO's project website, December 2, 2005.
21. Consisting of at least VPA, the Terminal Operator and selected contractors for the construction of the Project.
23. In the original table, this is referred to as the "Construction EMP"; however, during the February 23, 2007 Post-Certification meeting, the EAO acknowledged that this was actually referring to the Operation EMP.

Acronym Definitions: AMS = Adaptive Management Strategy; BCRC = BC Rail Company; CD = chart datum; CEAA = Canadian Environmental Assessment Act; CLC = Community Liaison Committee; CMHA = Canada Mortgage & Housing Corporation; ColRegs = International Regulations for the Prevention of Collision at Sea; CLP = Community Liaison Plan; DCLC = Deltaport Third Berth Community Liaison Committee; DCL = Deltaport Constructors Limited; DCL EMP = DCL Environmental Management Plan; DFI = Delta Farmers Institute; DFO = Department of Fisheries and Oceans; DP3 = Deltaport Third Berth Project;
EA = Environmental Assessment; EMP = Environmental Management Plan; ERP = Emergency Response Plan; EWP = Environmental Work Plan; FREMP = Fraser River Estuary Management Program; HGT = Hul'qumi'num Group Treaty; HOV = High Occupancy Vehicle;
MARPOL = International Convention for the Prevention of Pollution from Ships; MBCA = Migratory Birds Convention Act; MBR - Migratory Birds Regulations;
MV = Metro Vancouver; RTGs = Rubber Tired Gantry Cranes; SARA = Species at Risk Act; TDG = Transportation of Dangerous Goods; TSI = Terminal Systems Inc.

APPENDIX B

Roberts Bank East Causeway Habitat Compensation Project

Construction Environmental Management Plan

ROBERTS BANK EAST CAUSEWAY HABITAT COMPENSATION PROJECT

CONSTRUCTION ENVIRONMENTAL MANAGEMENT PLANS

Submitted to:

Double M Excavating
13505 Park Lane
Maple Ridge, BC
V4R 2T1

Aug-09

Submitted by:

Triton Environmental Consultants Ltd
8971 Beckwith Road
Richmond, BC
V6X 1V4

TABLE OF CONTENTS

LIST OF TABLES

LIST OF APPENDICES

LIST OF ATTACHMENTS

1.0 Introduction

Double M Excavating has been retained by the Vancouver Fraser Port Authority (VFPA) to build the Roberts Bank East Causeway Habitat Compensation Project (Attachment 1). Consistent with the VFPA's environmental requirements and conditions for the project, the following construction environmental management plans (EMPs) have been prepared:

- Air Quality Mitigation Plan (AQMP)
- Marine Water Quality Plan (MWQP)
- Hazardous Waste Management and Spill Control Plan (HWMSCP)
- Solid Waste Management Plan (SWP)
- Noise Management Plan (NMP)

The content of these plans was developed on the basis of environmental performance criteria and management strategies outlined in the following documents:

- Appendix 1, Environmental Requirements and Conditions, Table 1. Marine Construction Environmental Management Plans, pages 2 to 10. This document was issued as part of the construction tender documents (General Conditions, May 2009).

- Appendix E, Owner's Table of Commitments and Assurances. Status Update as of May 31, 2009. This document was downloaded from the Deltaport Third Berth website.

- Vancouver Port Authority (VPA), G.L Williams & Associates, Northwest Hydraulic Consultants, Archipelago Marine Research Ltd, Hemmera Envirochem Inc, Jacques Whitford, Moffatt & Nichol, Klohn Crippen Berger, Sharpe & Diamond Landscape Architecture & Planning (2006). *Vancouver Port Authority Deltaport Third Berth Submission of Information for Fisheries Act Authorization Habitat Compensation Program*.

- FISHERIES ACT S35(2) AUTHORIZATION No 02-HPAC-PA1-000-000144, as provided in VFPA tender documents for the east causeway.

- FISHERIES ACT S35(2) AUTHORIZATION No 02-HPAC-PA1-000-000144-2 provided by the VFPA.

- Deltaport Constructors Limited (DCL) Project Environmental Management Plan Deltaport Berth 3 Marine Works (2006).

Content was also developed using provincial and federal legislation, municipal bylaws and industry best management practices. These EMPs will guide construction and environmental monitoring activities for the project. The VFPA will report on environmental monitoring and construction activities to Fisheries and Oceans Canada (DFO). Double M has also retained an environmental consultant to provide support as needed.

2.0 Project description

Construction will begin in September 2009 and may take up to 15 months to complete. The following tasks will be undertaken in support of the project:

- Sheet pile wall installation along the causeway within 3 m of the existing asphalt[1].

- Removal of existing slope protection, upland and foreshore substrates to a distance of up to 50 m from the existing causeway. This will include the removal of vegetation, shrubs, grasses, timber, logs and wood waste in compensation area.

- Barging excavation spoils offsite for ocean disposal and / or re-use by a local aggregate supply company.

- Installation of new slope protection, with a combination of imported materials and existing materials in suitable condition for re-use onsite.

- Construction of barrier islands reinforced with riprap and filter stone, which will be covered with growing medium.

[1] Double M has retained Westshore Constructors Ltd to install the sheet pile wall.

- Creation of a salt marsh channel between the barrier island and the sheet piles. This channel will be underlain with filter stone and overlain with marsh soils.
- Creation of sand / mud beaches with boulder clusters.
- Creation / reinstatement of a continuous 4 m pull out adjacent to the causeway.
- Marsh and shoreline planting.
- Road restoration (e.g. re-paving) as required.

This list of construction activities was also used to identify suitable content for the EMPs.

3.0 Air quality mitigation plan

The Air Quality Mitigation Plan (AQMP) identifies potential air quality impacts that may arise during construction, and outlines mitigation measures to address these potential impacts. In the context of the Robert's Bank east causeway project, dust and combustion emissions from diesel and / or gas powered vehicles and stationary equipment are of most concern. Asphalt re-instatement and paints would also result in localized volatile chemical emissions.

3.1 VFPA mitigation measures and commitments

The VFPA[2] has developed the following general air quality protection requirements for the east causeway project:

- On-road low sulphur diesel fuel must be used in all equipment capable of using such fuel.
- Diesel particulate filters must be used on all construction equipment capable of supporting their use.

[2] VFPA (pg 3, Appendix 1: Environmental Requirements and Conditions, Table 1.Marine Construction Environmental Management Plans, May 2009)

- Covered vehicles are required when transporting bulk fine materials to the project area.

- Paved areas need to be cleaned on a routine basis to prevent the accumulation and mobilization of dust. Speed limits should be also implemented to reduce dust mobilization.

- Site specific worker education programs must be developed to address:
  - Idling reduction (automatic anti-idling shut-off where feasible)
  - Operation of equipment at optimum rated loads
  - Routine equipment inspection and maintenance
  - Reducing worker trips (e.g. carpooling)
  - Daily inspections to identify dust and equipment exhaust issues.

In addition to establishing the mitigation measures show above, the VFPA has committed to the following strategies as described in Appendix E Owner's Table of Commitments and Assurances (May 2009):

- The use (where feasible) of 1997 or later model shore based equipment and vehicles to reduce particulate matter (PM), hydrocarbon and nitrous oxides (NO_x) emissions.

- Compliance with the Canada Wide Standards[3] (CWS) for air quality, particularly 'Annex A' during construction and operation. Relevant CWS standards for the east causeway project emphasize managing $PM_{2.5}$[4].

- The use of applicable sections of MetroVancouver's Air Quality Management Plan (2005) and/or provincial and federal air quality objectives to guide air quality mitigation strategies.

[3] The Canada Wide Standards are considered *objectives* under the Canadian Environmental Protection Act (CEPA).

[4] $PM_{2.5}$ - particles ≤2.5 microns in diameter and including dust, dirt, soot, smoke, and liquid droplets. Sources of fine particles include combustion activities (motor vehicles, power plants, wood burning). US EPA http://www.epa.gov/pmdesignations/faq.htm#0

3.2 Site specific mitigation measures

Consistent with the above objectives Double M plans to use the following 1997 or later model excavating and trucking equipment onsite:

HITACHI EX600H-5	2001
JOHN DEERE 450LC	1999
KOMATSU PC300LC-6	1997
VOLVO EC290B LC	2004
SAMSUNG SE240LC-3	1998
CAT 320B	2000
KOMATSU PC200LC-6 LONG REACH	1997
JOHN DEERE 310 SJ rubber tire backhoe	2008
PETERBILT truck with end dump	2008
KENWORTH truck with end dump	1998
KENWORTH tandem dump truck	2008

- Double M and its sub contractor(s) will assess the potential for dust generation and combustion emissions on an ongoing site or task specific basis during construction. Steps will be taken to minimize dust and combustion emissions as needed.

- Visual assessments of dust and exhaust emissions will be completed on an ongoing basis during work and / or while machinery is operating.

- Double M and its sub contractor(s) will use water trucks to control dust as needed and will ensure that sediment laden water generated through dust suppression does not enter the aquatic environment without prior holding and settling or filtration.

- As required, covered vehicles will be used to transport fine materials.

- To start a maximum speed limit of 50 km / hour will be established in working areas. This limit will be adjusted as necessary to control dust mobilization.

- Worker education with respect to engine idling, equipment operation and other site specific measures to protect air quality (e.g. ongoing visual assessments of dust generation) will be provided at project start up and on an ongoing basis to ensure new staff understand site requirements.

- The sheet pile contractor plans to use a low volatile organic compound (VOC) primer[5] on sheet piles. Consistent with the ports specifications Painting Exterior Metal Surfaces, Section 09 97 19, coatings will be applied offsite.

3.3 Air quality monitoring

Air quality monitoring is not anticipated at this time. However, should air quality monitoring become a requirement, sampling protocols will be consistent with methods from the following provincial document:

- BC Field Sampling Manual. For Continuous Monitoring and the Collection of Air, Air-Emission, Water, Wastewater, Soil, Sediment, and Biological Samples. Part B – Air and Air Emissions Testing (2003).

4.0 Marine water quality plan

The Marine Water Quality Plan (MWQP) provides guidance on maintaining water and sediment quality during sheet pile installation, excavation and spoil loading, fill placement, barrier island construction and restoration planting. This document outlines the regulatory framework associated with water quality, planned mitigation measures to protect water quality and recommended water quality monitoring protocols. The MWQP emphasizes routine works and risks to water quality, such as elevated turbidity and suspended solids resulting from foreshore disturbance, changes in pH associated with concrete works and localized effects on water and sediment quality from spills or leaks of hazardous materials.

[5] Endura Low VOC MC-Zn Zinc Rich Primer.

4.1 Regulatory framework

A combination of provincial and federal acts, regulations and best practices guide the protection of water and sediment quality in the marine environment. Key acts, regulations and best practices are shown in Table 1.

Table 1. Regulatory framework, best practices and guideline documents for marine water quality.

Federal and provincial acts	Relevant regulations and sections
Fisheries Act (Canada)	Section (34) Deposition of a Deleterious Substance Section (35) Harmful Alteration, Disruption or Destruction of Fish Habitat
Environmental Management Act (BC)	Hazardous Waste Regulation- Part 8 storage and transportation; Spill Reporting Regulation (reportable spills)
Guideline documents	**Relevant sections**
Technical Guidance on Contaminated Sites: Characterization and Confirmation Testing (MOE)	*In situ* characterization and confirmation sampling, sampling guidance for suspect material, stockpile sampling procedures and data interpretation.
BC Approved and Working Water Quality Guidelines and CCME Environmental Quality Guidelines	Guidelines for a wide variety of parameters including: turbidity, total suspended solids, pH, metals, polycyclic aromatic hydrocarbons, monocyclic aromatic hydrocarbons. Provincial water and sediment quality guidelines, federal water, soil, air and sediment quality guidelines.

4.2 VFPA turbidity, TSS and pH guidelines

In addition to federal and provincial guidelines, the VFPA has established discharge criteria for turbidity, total suspended solids (TSS) and pH in the east causeway construction areas (VFPA, 2006 and DCL, 2006)[6]: These criteria are summarized in Table 2.

[6] VPA et al, 2006: Vancouver Port Authority Deltaport Third Berth Submission of Information for Fisheries Act Authorization Habitat Compensation Program.

DCL 2006. Deltaport Third Berth Construction Environmental Management Marine Construction.

Table 2. VFPA turbidity, TSS and pH criteria.

Parameter	VFPA Criteria (2006) (DCL, 2006)
Turbidity (NTU)	When background is ≤ 50 (NTU) the induced turbidity should not exceed 5 NTU above background.
	When background is > 50 NTU, the induced turbidity should not exceed the background values by >10% of the background value.
TSS (mg/L)	When background is ≤ 100 mg/L (ppm), the induced TSS should not exceed 10 mg/L above background.
	When background is > 100 mg/l TSS, the induced TSS should not exceed 10% of the background value.
pH	6.5 to 9.0

The VFPA turbidity and TSS criteria are reflective of induced measures in the receiving environment and are not applied directly to site discharges, except during wet concrete works, when discharge waters must be <10 NTU and between 6.5 to 9.0 prior to discharge.

4.3 Mitigation measures to protect water quality

As indicated in Section 1 of this MWQP plan, construction activities with some potential to impact marine water quality in the east causeway area include:

- Sheet pile installation
- Foreshore sediment / upland soils excavation
- Infilling with granular material
- Barge grounding
- Hauling
- Temporary storage of spoils and planting medium
- Small spills
- Concrete works

Mitigation measures identified to offset the effects of these activities will include but not necessarily be limited to the following:

- Sheet pile installation and foreshore excavation will generally be undertaken in the dry. This will be the most effective way to limit sediment suspension in foreshore habitats. If work must be undertaken at higher tide levels in wetted areas, Double M will meet with the VFPA's environmental monitor and their environmental consultant prior to in water work to determine appropriate mitigation measures. These may include, for example, the use of silt curtains to minimize sediment plume mobility.

- *The port requires work in the fisheries sensitive period (March 1 to August 15) be completed in the dry, during suitable tides, or inside isolation areas from which fish have been excluded (VPA et al, 2006).*

- Sheet pile coatings will be applied offsite, prior to installation. As such, only small quantities will be needed onsite to complete patchwork immediately after steel sheet pile bulkhead walls are installed, and after excavation works in front of the walls are completed. The port has specified that a biodegradable cleaner must be used during repairs (VFPA, April 2009).

- Double M plans to work in sections, completing all work between the existing mudflat and the causeway before moving on to the next section. This will mean, for example, that at the southern end of the causeway, excavation will start at the toe of riprap and crews will work backwards to the barrier island, and continue through the salt marsh channel up to the installed sheet pile. This strategy will help avoid the creation of long lines of exposed areas that would be subject to wave erosion and would locally increase turbidity during higher tides.

- Turbid excavation waters from upland working areas will not be discharged directly to the foreshore. Where feasible (depending on weather, tide levels, discharge volumes) water may be discharged to ground adjacent to the paved road for exfiltration. A series of gravel packed sumps, in combination with trash pumps may also be used to manage turbid discharge. Temporary settling ponds may also be required.

- Salvaged and imported aggregate for slope protection and surficial materials will be clean and free of organics and other fines (General Notes & Design Criteria, Drawing 34-291-151, page 2 of 2). Where required, these materials will also be carefully placed, as opposed to dropped from a height (VPA et al, 2006).

- Barges and other vessels will not be permitted to ground on the foreshore or seabed, although spud barges are acceptable for use (VPA et al, 2006). Vessels using the barge berth will take steps to avoid sediment disturbance associated with propeller wash.

- Inactive spoil and growing medium stockpiles are not anticipated. However, should inactive stockpiles develop and should they have some potential to create air or water quality issues, they will be covered with anchored temporary covers. Stockpiles located on permeable upland areas may also need to be surrounded by keyed in silt fence for additional protection. This would be determined on a case-by-case basis with the environmental monitor.

- Temporary access points will be constructed from angular rock (e.g. 3” minus) where onsite conditions will result in excessive mud formation and mud tracking onto paved surfaces.

- Spills and / or the discovery of suspect contaminated sediments will be managed by implementing the Hazardous Waste Management and Spill Control Plan (HWMSCP). Potential effects on water quality will be mitigated through spill containment and the appropriate disposal of used response materials and affected sediments. Suspect contaminated sediments will be segregated, protected from the elements, and characterized through analytical sampling to determine appropriate disposal strategies.

- Standard containment and wastewater controls for concrete works (concrete cope beam at sheet pile wall) will be implemented as follows:
  - Concrete delivery trucks will not be permitted to wash out onsite, although most delivery trucks are equipped with wash out containment so this is not expected to be an issue.
  - Concrete will be contained in forms, which will limit the exposed concrete surface area with the potential to impact water quality. As required, temporary plastic covers will be used to cover small areas of exposed concrete. Selected rapid curing agents like Eco-cure™ may also be used with prior approval from the environmental monitor and VFPA.
  - CO_2 tanks, hoses and regulators will be maintained onsite and staff will be trained in their use to respond to concrete spills to water.
  - Concrete wastewater generated onsite will not be permitted to enter aquatic environments unless it meets the following criteria: <10 NTU and pH between 6.5 and 9.0 (VFPA, 2006). Temporary containment and pH adjustment may be required to achieve these criteria.

4.4 Water quality monitoring program

The main parameters of concern for this project are turbidity, TSS and pH. These parameters will be monitored as needed in the receiving environment and a control or background site[7] outside of the working area – and will involve taking *in situ* measurements of pH and turbidity. TSS samples will also be collected if necessary. Corrective measures will be implemented as required on the basis of *in situ* pH and turbidity results.

[7] As per the Fisheries Act Authorization: background or control sites – background is considered the concentration or measure for a given parameter (e.g. turbidity) at a site which is unaffected by construction or any discharge from the construction site.

5.0 Hazardous Waste Management and Spill Control Plan

The Hazardous Waste Management and Spill Control Plan (HWMSCP) provides guidance on managing hazardous materials. Hazardous materials have the potential to affect soil, water and sediment quality and hazardous wastes are prohibited from routine disposal. Examples of hazardous wastes that may be associated with the east causeway project include used oils, hydraulic fluids, sheet pile coatings, concrete wastewater and spent solvents. Contaminated soils and absorbent materials used to clean up spills would also be considered hazardous waste. As required by the VFPA[8] this HWMSCP outlines the following:

- Provincial and federal regulatory framework dictating hazardous materials management
- Strategies and general guidelines for managing hazardous materials
- Spill preparedness and response requirements
- Emergency contact list
- General guidelines for fuel management and fueling.

5.1 Regulatory framework

A combination of provincial and federal acts, regulations and best practices guide the storage, transportation and disposal of hazardous materials. These are shown in Table 3.

[8], Roberts Bank East Causeway Habitat Compensation, Environmental Conditions and Requirements. Table 1. Marine Construction Environmental Management Plans (2009).

Table 3. Regulatory framework guiding hazardous materials management in BC.

Federal and provincial acts	Relevant regulations and sections
Environmental Management Act (BC)	Contaminated Sites Regulation - Part 7 Liability Part 8 Contaminated soil relocation Hazardous Waste Regulation- Part 8 storage and transportation Spill Reporting Regulation (reportable spills)
Fire Services Act: British Columbia Fire Code Regulations	Fuel dispensing and storage requirements
Public Health Act (BC)	Part 4, Section 15: reporting of toxic spills
Transportation of Dangerous Goods Act (Canada)	Section (5) Safety Requirements, Standards and Marks Section (7) Emergency Response Assistance Plan requirements Section (8) Means of containment Section (18) Duty to Respond (report) Section (23) Disclosure of information
Transportation of Dangerous Goods Act (BC)	Parts (2,4) Requirements for appropriate product labelling Duty to report discharge Dangerous Goods Shipping Documentation (all marine pollutants and flash points of Class 3 flammable products must be identified in the documents)
Canadian Environmental Protection Act (CEPA) (Canada)	In the ocean disposal context: Schedule 1 – List of toxic substances Schedule 5 – Waste or other matter
Fisheries Act (Canada)	Section (32) Destruction of Fish Section (34) Deposition of a Deleterious Substance Section (35) Harmful Alteration, Disruption or Destruction of Fish Habitat

Table 3. Regulatory framework guiding hazardous materials management in BC, continued.

Guidelines, BMPs and Technical Guidance	Relevant sections
A Field Guide to Fuel Handling, Transportation and Storage	Design, Operations, Transportation Documentation and Training Small containers - labeling, storage and dispensing Small TDG tanks Large TDG tanks Spill Response
Technical Guidance on Contaminated Sites: Characterization and Confirmation Testing (MOE)	*In situ* characterization and confirmation sampling, sampling guidance for suspect material, stockpile sampling procedures and data interpretation.
BC Approved and Working Water Quality Guidelines and CCME Environmental Quality Guidelines	Guidelines for a wide variety of parameters including: metals, polycyclic aromatic hydrocarbons, monocyclic aromatic hydrocarbons and pH. Provincial water and sediment quality guidelines, federal water, soil, air and sediment quality guidelines.

5.2 Hazardous materials management strategies

Effective hazardous materials management strategies include:

- Preparing inventories of chemicals that will be used, or have the potential to be used onsite. Inventories should include anticipated volumes and types of materials and Material Safety Data Sheets (MSDS).
- Providing appropriate storage and general guidelines for use of hazardous materials.
- Conducting an overview assessment of risks associated with spills of known hazardous materials used in working areas. This requires the contractor to evaluate the potential hazards of working with specific chemicals, in association with a particular task, in a particular area.

- Developing and posting spill prevention plans. Such plans would include guidelines for daily use and overnight fuel storage, as well as designated waste storage areas for oils, solvents, concrete and other potentially hazardous products. These plans also include guidelines for managing suspect or known contaminated materials.

- Developing and posting spill preparedness and response plans for chemicals in use onsite. These plans should include, at a minimum, information on appropriate spill response equipment, communications and response plans.

5.3 Inventory of chemicals

Potentially hazardous materials anticipated for use in the east causeway excavation program generally include small quantities of antifreeze, hydraulic oils, degreasers, sheet pile paint, concrete, gasoline and diesel fuel. Oil and grease products anticipated for use include the following[9]:

- Chevron DELO SHP SAE 15W-40 (Diesel engine oil)
- Chevron AW46 (Hydraulic oil)
- Chevron Supreme High Mileage 10W-40 (Motor oil)
- Chevron RPM 2 (Grease)

Fuel will be stored onsite in a combination of small containers for daily use (e.g. jerry cans) and in truck box tidy tanks (≤ 400 L) equipped with automatic shut off. Given the tanks will be truck mounted, they will not be onsite full time, and will be protected from potential damage. Double M will formalize the list of chemicals anticipated for use once they and their sheet pile subcontractor have mobilized to the site. MSDS for each chemical will be compiled in one or more binders and will be kept in designated hazardous materials storage areas for quick reference. Note Double M is investigating alternatives to traditional petroleum hydrocarbon based products.

[9] Note Double M will investigate opportunities for using vegetable based fluids in their machinery prior to mobilizing onsite.

5.4 Storage and use of hazardous materials

Where feasible and applicable, Double M and its subcontractors will follow these general guidelines for storage and use of hazardous materials in construction areas (Gibb *et al.*, 1999):

- Outdoor storage will be secured when unmanned, and storage of hazardous or potentially hazardous materials will ideally be arranged so that stored products are away from vegetated areas and there is ≥6 m between stored products, uncontrolled grasses or weeds, and fuel dispensers.
- Storage areas and containers will be regularly inspected for leaks, poor condition, inadequate seals and other problems that may result in the spill or release of a hazardous substance.
- Personnel will read and follow the directions for all products, and have easy access to MSDS for all hazardous material onsite.
- Products will be stored in their original containers and their labels maintained in good condition; labels will be protected with transparent tape as necessary.
- As needed and where safe to do so, a correctly sized funnel will be used to transfer hazardous materials from one container to another.
- Personnel will avoid mixing chemicals unless specified by the manufacturer, and will use chemicals as specified on labels, in well-ventilated areas.
- Corrosives will be stored away from flammables.
- Re-useable or recycled degreasers will be used where possible or appropriate to machinery and equipment.

5.5 Overview assessment of risks

Risks to water, soil and sediment quality in the east causeway working area would primarily include spills to ground or water, as a result of leaking or failed hydraulic lines, improper storage of daily use fuels, lubricants and paints, and failed wet concrete containment.

Spills to ground could result in localized soil contamination, which would require spill response, excavation and segregation of contaminated soils, followed by offsite disposal of used spill response gear and soils consistent with the *Environmental Management Act*.

Spills to water could result in localized exceedences of provincial water quality guidelines and criteria under the Contaminated Sites Regulation (CSR). Spills to water could also result in localized effects on sediment. In both cases, spill response would be required. Excavation and segregation of contaminated sediments, as well as offsite disposal of spill response materials and sediments would be required.

5.6 Spill prevention

Spill prevention strategies for the east causeway project will include the following:

- Daily inspections of machinery for leaks, cracked hoses and other conditions that may result in spills. Contractors will also ensure external equipment surfaces are free of oil, diesel and other potential contaminants prior to use.
- Routine inspections of storage areas and containers for leaks, poor condition, improper seals and other problems that may result in the release of a hazardous substance.
- Storage of daily use fuels, lubricants and other chemicals ≥ 15 m away from the Highest High Water Level (HHML)[10], over impermeable areas and / or in lined, leak proof containers. Temporary covers will be used as needed to prevent rainfall from pooling in daily use storage containers.

[10] As per Section 21 of Fisheries Act Authorization 02-HPAC-PA1 -000-000144.

- Daily use chemicals will be stored onsite in a locked container or will be taken offsite at the end of each workday.

- Fuelling and equipment maintenance will be undertaken ≥ 15 m away from the foreshore wherever possible. In the event this becomes impractical or impossible to achieve, a fuelling and equipment maintenance area will be established in consultation with the environmental monitor and the VFPA.

- Written procedures for the proper use and storage of chemicals will be provided as needed, depending on the potential risks associated with each chemical, anticipated frequency of use and any special handling requirements.

Based on the results of Hemmera's May 2009 soil and sediment sampling conducted along the east causeway[11] contaminated media are not expected in the project area. However, should localized areas of soil or sediment contamination be discovered these materials will be segregated and either trucked offsite immediately or temporarily stored onsite. Materials stored onsite will be located on impermeable surfaces and protected with temporary covers (e.g. poly, tarps etc.) to prevent losses and contaminant migration associated with wind and rainfall.

5.7 Spill preparedness

Written spill response procedures and communications protocols will be posted at conspicuous locations onsite. Personnel should know the locations of the spill kits in each working area and be trained in their use prior to construction. Spill kits will be appropriate to the types of hazardous materials and anticipated spills onsite (e.g. smaller hydrocarbon spills).

Machine operators will generally have onboard spill kits. However, one larger spill kit should also be also available at each working area. At a minimum we recommend larger kits contain: (50) absorbent pads, (4) booms, (1) bag granular absorbent, (4) disposal bags, (1) stop leak plug, personal protective equipment, (1) roll duct tape, flagging, tarps, up to 80 empty sand bags, instructions and list of contents.

[11] Samples were collected from 20 different test pit areas along the causeway and analysed for PAH (not detected), cadmium (<0.16 ppm), lead (not detected <30 ppm) and mercury (<0.02 ppm). (VFPA, May 2009).

Spill kits will need to be restocked after use. BC rated fire extinguishers, pointed and/or broad shovels, nylon rope (100 m) and recovery / storage drums should also be available for use onsite (Ministry of Water, Land and Air Protection, 2002). Finally, the province recommends keeping between 250 mL and 1 Liter of commercial, dry or pre-mixed bentonite clay onsite to plugholes in leaking containers during spill response (MWLAP, 2002).

5.8 Spill response

Double M and its subcontractors will develop and post spill response plans prior to construction. These plans will include but not be limited to the following procedures:

- Confirm the safety of all personnel and secure the area (as needed)
- Eliminate ignition sources
- Identify spilled product, associated hazards and clean up requirements (refer to MSDS if uncertain).
- Contact site supervisor (Anne Tenbrink)
- Determine if the spill can be contained and cleaned up by onsite staff. Spills that cannot be managed by onsite personnel should be directed to the Port and other agencies identified in cooperation with the Port.
- Stop the flow of spilled materials if safe to do so.
- Contain spilled materials if safe to do so.
- Clean up and dispose of spilled product and used response materials consistent with the Environmental Management Act, Hazardous Waste Regulation.

- Notify the Environmental Protection Division of Environment Canada and the Provincial Emergency Program (PEP) in the event of a reportable spill, as defined by the Spill Reporting Regulation of the Environmental Management Act (see Attachment 3).

    - *Spills of flammable Class 3 Liquids like gasoline or fuel oil that are ≥ 100 L are reportable.*

- Investigate causes of the spill and identify required changes to hazardous materials management strategies and spill response plans.

- Complete spill reporting forms ensuring the following information is provided:

    - Name of the person(s) reporting the spill
    - Witnesses of the spill
    - Date, time and location of the spill
    - Source of spill
    - Type and estimated volume of product
    - Nature of the receiving environment (e.g. soil, water)
    - Spill response measures
    - Estimated volume recovered
    - Impact of the spill on terrestrial and / or aquatic resources
    - Required remediation, if any
    - Measures take to prevent similar spills in future
    - Agencies made aware of the spill (as needed).

A list of contacts and emergency numbers for managing and responding to spills is provided in Table 4.

Table 4. Contact list for spill response.

Contact person	Role / reason for contact	Phone Number
Anne Tenbrink	Superintendent, Double M Excavating	Cell 604 240 3584 Office 604 467 4792
Donna Salmi,	Engineering support, Double M Excavating	Cell 778 549 6007 Office 604 467 4792
Juergen Baumann	Manager, Environmental Programs Port Metro Vancouver	Office 604 665 9081 Cell 604 603 8110
Patrick Craig	Environmental Coordinator, Assessment and Monitoring, Environmental Programs	Office 604 665 9121 Cell 778-231-6953
Provincial Emergency Program (PEP)	Spills of hazardous materials under the *Spill Reporting Regulation*	1 800 663 3456
Environmental Protection Service - Environment Canada	Spills of hazardous materials under the *Spill Reporting Regulation*	604 666 6100
CANUTEC	Emergencies involving dangerous goods	613-996-6666 or *666 by cell phone.
Canadian Coast Guard (CCG)	Clean up assistance	1 800 889 8852
DFO RADIO ROOM CONTACT	-	604-666-3500
Corporation of Delta	Climate Action & Environment, spill reporting	604 946 3253

5.9 General guidelines for fuel management and equipment fuelling

Double M and its subcontractors will follow these general guidelines for fuel management and the fuelling of trucks and other machinery where applicable (Ministry of Water, Land and Air Protection, 2002; Triton, 2005):

Fuel management

- Fuel containers must be labeled as per the Workplace Hazardous Materials Information System (WHMIS) and consistent with the *Fire Code* (FC Section 4.2.3.2.) - as necessary.

- Small containers (≤ 230L as per MWLAP 2002) that are used to store flammable or combustible liquids must meet design specifications of the Fire Code (FC Section 4.2.3.1.).

- Small TDG tanks (< 454L) must be designed, built, filled and sealed so that under normal handling and transport conditions, no discharge, emissions or escape of the dangerous goods that could endanger the public will occur.

- While above ground fuel tank storage is not expected, secondary containment will be required for truck-box fuel tanks that are > *230L and removed from the truck or other vehicle and operated in a fixed location for any length of time*. (FC 4.3.7.1.) Important note: secondary containment must have a capacity of ≥110% of the holding tank.

    - In the unlikely event that onsite fuel tank storage is required, tanks and onsite storage will comply with the provincial Fire Code, the CCME Environmental Code of Practices for Aboveground Storage Tank Systems Containing Petroleum Products (August 1994) and A Field Guide to Fuel Handling, Transportation and Storage (MWLAP, 2002)

- Containers must be maintained in good condition – with no evidence of rust, damage or leaks. Containers must also be adequately sealed with proper fitting lids, caps, bungs or valves to prevent spills and leaks.

- Hoses and nozzles used for dispensing fuel should be maintained in good repair.
- Maintenance and operating procedures will be established and posted to prevent spills. (FC 4.1.6.3.)

Fueling and servicing procedures

- Construction personnel will monitor all fuel dispensing.
- Engines will be shut off and smoking will be prohibited during fuelling
- Fuel transfers must be stopped prior to overflowing to leave room for expansion. Small TDG tanks must not be filled beyond a level corresponding to 90% capacity.
- Trucks, machines and other equipment must be fuelled ≥ 15 m away from the HHWL preferably over an impermeable surface (e.g. concrete).
- Equipment must be serviced ≥ 15 m away from aquatic or otherwise sensitive habitats. Drip pans and / or other protective devices should be used to prevent spills of petroleum products and other potentially hazardous liquids (e.g. antifreeze) during servicing.
- Contractors will contain fuel losses during fuelling or servicing of equipment and will inspect fuel-dispensing equipment for leaks.

6.0 Solid waste management plan

This Solid Waste Management Plan (SWMP) provides guidance on managing *non-hazardous waste* such as untreated wood, food waste, packing materials, broken concrete, damaged rebar and other non hazardous wastes common to construction. For information on managing potentially hazardous materials, like oily rags, used spill response gear or wood waste with an oily residue or appearance, see the Hazardous Waste Management and Spill Response Plan (HWMSP) in Section 5.0. This SWMP provides guidelines for developing site-specific solid waste management plans.

Relevant sections of the Canadian Construction Association's (CCA's) Best Practices Guide to Solid Waste Reduction (2001) are summarized in Appendix 1. Metro Vancouver's *Demolition, Land Clearing and Construction (DLC) Waste Toolkit* is provided in Attachment 4. This toolkit provides information on wastes prohibited from routine landfill disposal and identifies facilities that will accept selected construction wastes for re-use and recycling.

6.1 Regulatory and best practices framework

Solid waste is managed through a combination of provincial law and regional district prohibitions. The CCA has also developed guidelines for the reduction, re-use and recycling of selected construction materials. The regulatory framework and applicable BMPs are shown in Table 5.

Table 5. Provincial legislation, regional prohibitions and industry BMPs for solid waste management.

Acts, regional prohibitions and industry BMPs	Relevant sections
Environmental Management Act	Part 2—Prohibitions and Authorizations, Waste disposal.
Metro Vancouver	Selected materials banned from disposal via landfill: e.g. corrugated cardboard, styrofoam packing materials, PVC pipe, batteries, gypsum, asphalt, concrete, tires.
CCA (2001) A best practices guide to solid waste reduction	Opportunities to reduce, reuse and recycle at different stages of construction or demolition, and for specific materials.
Metro Vancouver Demolition, Land Clearing and Construction (DLC) Waste Toolkit	Deconstruction and salvage, Construction Waste Management, Hauling options. Directory of Deconstruction and Salvage Contractors and Used Building Materials Suppliers.

6.2 Solid waste management planning

For the East causeway project, solid waste management plans will emphasize effective waste containment and disposal measures to:

- Limit potential effects on scavenging wildlife.
- Ensure hazardous materials do not enter the landfill disposal stream.
- Encourage re-use and recycling where feasible.

SWMPs should include or be reflective of the following where appropriate:

- Inventory of expected waste types (e.g. wood, metals, cardboard) and rough anticipated volumes to identify onsite bin requirements.
- Suitable locations for disposal bins, which should be near active construction areas for convenient use. Secured and / or covered bins should be used to prevent wildlife access and the spread of garbage via wind as needed.
- Information (as needed) on sorting and storage requirements of specific wastes or materials that can be reused or recycled. Bins should be properly labeled and located in easily accessible areas to encourage reuse and recycling, and to ensure materials destined for landfill disposal are properly stored.
- Daily site cleaning and routine inspections of recyclables and waste disposal storage areas to make sure materials are correctly sorted and placed in the proper bins.
- Routine solid waste and recyclables pickup schedules.
- Employee and subcontractor training on site-specific waste management strategies. In particular, employees and subcontractors should be made aware of materials that are banned from landfill disposal, including hazardous wastes.

Site-specific waste management plans should be posted at each worksite for reference as needed.

6.3 Re-use of onsite materials

Where materials are in suitable condition for re-use Double M will salvage existing slope protection materials for use in the habitat compensation works. Double M is also investigating opportunities for offsite uses of spoil generated through excavation. This will ideally divert substantial volumes of spoil from disposal at sea. In addition, Double M will segregate clean wood (logs, stumps etc.) suitable for use in habitat compensation projects and move it to their Maple Ridge site for storage.

7.0 Noise management plan

The Noise Management Plan (NMP) outlines applicable noise bylaws, best practices and potential noise reduction measures to minimize the effects of construction noise. Noise modeling conducted for the original impact assessment for the Deltaport Third Berth project indicated no significant impacts[12] on noise levels at local residential areas were expected. Additionally, noise levels were not expected to exceed external noise thresholds at any of the residential sites studied as part of the assessment (VPA, 2005). Although significant noise impacts are not anticipated, contractors are required to implement noise mitigation measures when needed. The VFPA has committed to Noise Management Planning for all phases of construction, including the east causeway habitat compensation project, and has established a 24-hour help line for the general public to express their concerns (VFPA, 2009).

7.1 Noise bylaws and criteria

Noise bylaws and criteria relevant to the east causeway project include:

- Corporation of Delta (COD) Noise Control Bylaw No. 1906, 197210, which outlines construction-timing restrictions.
- National Guidelines for Environmental Noise Control (NGENC) Health and Welfare Canada, Environmental Health Directorate, Health Protection Branch, March 1989, which outlines noise thresholds, such as Leq noise level of 45 dBA for interiors where spoken communication is important and an Leq of 40 dBA for bedrooms to prevent sleep disturbance (VPA, 2005).
- Workers Compensation Board BC Occupational Health and Safety Regulation, Part 7, Noise Exposure[13] – workers must not be exposed to noise levels that exceed 85 dBA L_{ex} daily noise exposure level or 140 dBC peak sound level.

[12] Described as <1 decibel increase above ambient conditions.

[13] Part 7, Noise exposure also provides guidelines for noise measurement programs, Noise control and hearing conservation program, Hearing protection and warning signs.

Under the Noise Control Bylaw the Corporation restricts construction noise as follows:

- Monday to Friday prohibited before 7:00 am and after 7:00 pm.
- Saturday noise prohibited before 9:00 am and after 5:00 pm.
- Construction noise prohibited on Sundays.

Double M will make all reasonable efforts to complete the project consistent with the Corporation's criteria. For example, construction is not anticipated on Sundays. Where feasible work will be scheduled between Monday and Friday, 7:00 am. to 7:00 pm and on Saturdays between 9:00 am and 5:00 pm. We note however the need to work during low tides will dictate Double M's work schedule and will necessitate night-time work.

Noise mitigation measures will be implemented as necessary to limit potential effects of nighttime construction noise. The implementation of construction noise mitigation measures, in combination with worker hearing protection and other measures to protect worker health and safety are expected to address the NGENC and the requirements of the Occupational Health and Safety Regulation.

7.2 Mitigation measures

Examples of noise mitigation measures that may be implemented during the east causeway project include:

- Developing a construction noise awareness training program for all personnel addressing site specific and generic construction noise issues, potentially sensitive noise receptors, relevant noise bylaws and performance criteria.

- Preparing and submitting a list of equipment, prior to construction, to evaluate potential noise impacts. Examples of noise ratings for construction machinery are provided in Table 6.

- Selecting less noisy machinery, vehicles and equipment for use onsite wherever possible. Newer equipment, and/or equipment with noise suppression features like exhaust silencers on air tools should be evaluated for use onsite.

    - Equipment should be kept in good order, emphasizing lubrication, replacement of worn parts and the condition of exhaust systems. Diesel and gas powered equipment should be routinely inspected and equipped with higher quality mufflers where possible.

- Locating noisy equipment (e.g. portable generators) away from sensitive noise receptors, such as construction personnel or nearby shoreline areas frequented by birds.

- Muffling back up beepers where safe and feasible to do so.

- Shutting off equipment that is not in use and operating equipment at the minimum speeds permitting effective operation, with hoods and shields closed (GVTA, 2004).

- Enforcing speed limits to reduce vehicle noise. This will also help reduce dust mobilization.

Table 6. Examples of noise ratings and equipment age (from Gilchrist *et al*. 2003).

	Noise levels dBA (measured at 15 m from source)	
Equipment	**New equipment**	**Old equipment (>5 yrs old)**
compressor	73	76-80
backhoe	75-80	83-88
concrete mixer	75	85-87
concrete pump	75	82-85
concrete saw	90	n/a
concrete vibrator	75	76-80
crane	75	85-90
bulldozer	75	83-88
dump truck	84	85-88
excavator	83	85-87
grader	72-75	85-90
jackhammer	75-80	85-90
loader	80-85	92-95
paver	80-85	95-101
rock drill	80-85	95-98
roller	80	88-90
scraper	78-83	96-98
tractor	75	85-90
trencher	83-88	n/a
vibratory rollers	95	n/a

8.0 References

CCA (2001). CCA (2001) A best practices guide to solid waste reduction

Fisheries and Oceans Canada (2006) FISHERIES ACT S. 35(2) AUTHORIZATION Authorization No 02-HPAC-PA1 -000-000144.

Fisheries and Oceans Canada (2008) FISHERIES ACT S. 35(2) AUTHORIZATION Authorization No 02-HPAC-PA1 -000-000144-2 provided by the VFPA

Gibb, A.; Kelly, H; Schueler T.; Horner, R.; Simmler, J.; Knutson, J. 1999. *Best Management Practices Guide for Stormwater.* Burnaby, B.C.: Greater Vancouver Sewerage and Drainage District.
http://www.gvrd.bc.ca/sewerage/managment_guide.htm

Gilchrist, A.; Allouche, E.N.; Cowan, D. 2003. Prediction and mitigation of construction noise in an urban environment. In: *Canadian Journal of Civil Engineering* 30(4), p. 659–672

GVTA. 2004. *Fraser River Crossing Project: Table of Commitments and Assurances*. Greater Vancouver Transportation Authority, June 7, 2004. Online:
http://www.eao.gov.bc.ca/epic/output/html/deploy/epic_document_214_18977.html

MetroVancouver (2008). DLC Waste Management
Toolkit A Guide for the building construction industry
http://www.metrovancouver.org/about/publications/Publications/dlctoolkit08web1.pdf

Ministry of Water, Land and Air Protection (2002) A Field Guide to Fuel Handling, Transportation and Storage.
http://www.env.gov.bc.ca/epd/industrial/oil_gas/pdf/fuel_handle_guide.pdf

RTP. 1999c. *Construction Environmental Management Program: Solid Waste Management, & Demolition, Land Clearing & Construction (DLC) Waste Management Guidelines.* Vancouver, B.C.: Rapid Transit Project 2000.

VFPA (May 2009) Roberts Bank East Causeway Habitat Compensation VANCOUVER, B. C. CANADA ADDENDUM NO. 4 (Hemmera soil and sediment sampling results)

VFPA (2009). Appendix 1: Environmental Requirements and Conditions, Table 1. Marine Construction Environmental Management Plans. Included in RFP document.

VFPA (2009) Owner's Table of Commitments and Assurances[1]
Status Update as of May 31, 2009.
http://www.portmetrovancouver.com/Libraries/PROJECTS_Deltaport_Third_Berth_Project/Appendix_E_-_Owner_s_Table_of_Commitments_Assurances_-_May_31_2009_-_FINAL.sflb.ashx

VFPA (2009) ROBERTS BANK EAST CAUSEWAY Section 09 97 19 HABITAT COMPENSATION PAINTING EXTERIOR METAL SURFACES

VFPA (2006) PROJECT ENVIRONMENTAL MANAGEMENT PLAN DELTAPORT BERTH 3 MARINE WORKS DELTAPORT CONSTRUCTORS LTD. (DCL)

Vancouver Port Authority (VPA), G.L Williams & Associates, Northwest Hydraulic Consultants, Archipelago Marine Research Ltd, Hemmera Envirochem Inc, Jacques Whitford, Moffatt & Nichol, Klohn Crippen Berger, Sharpe & Diamond Landscape Architecture & Planning (2006). Vancouver Port Authority Deltaport Third Berth Submission of Information for Fisheries Act Authorization Habitat Compensation Program.

VPA (2005). Chapter 14. Noise. Deltaport Third Berth Project Environmental Assessment Application January 2005.

Triton Environmental Consultants Ltd. (2005) Richmond • Airport • Vancouver Rapid Transit Canada Line Construction Environmental Management Plan.

USEPA (accessed 2009). Fine Particle ($PM_{2.5}$) Designations. http://www.epa.gov/pmdesignations/index.htm

Appendix 1: Relevant sections of the CCA Best practices guide to solid waste reduction[14].

Contractors are encouraged to consider the following guidelines when working on the east causeway project: (RTP, 1999c):

Reduce:

- Identify and implement construction methods that result in less waste.
- Identify practices with the potential to generate unacceptable volumes of waste.
- Purchase materials with less packaging and other materials that will contribute to onsite waste streams.
- Purchase materials with the dimensions required by the project, this would help prevent unused construction materials from entering the waste stream.

Reuse:

- Identify construction materials with potential for re-use.
- Separate materials that can be re-used onsite and store in protected areas.
- Identify local markets for re-usable materials.

Recycle:

- Identify construction waste that may be recycled and used either on or offsite.
- Segregate materials that can be recycled and store them in protected areas.
- Use recycled construction materials where feasible, practical and consistent with contract specifications.

[14] From Section 12.0 Solid Waste Management Plan Richmond • Airport • Vancouver Rapid Transit Canada Line. Construction Environmental Management Plan (Triton, 2005).

- Comply with local government initiatives and prohibitions with respect to preventing recyclables from entering the solid waste stream.
- Identify local markets for recyclable materials.

Strategies for metals

Metals waste generally includes, but is not limited to, structural steel, steel studs and tacks, re-bar, electrical and mechanical systems, flashing and aluminum siding (CCA, 2001). Contractors are encouraged to identify metals recycling facilities that provide recycling bins, haulage and segregation of ferrous and nonferrous metals. Simple metals waste management strategies are shown in Table A1 (CCA, 2001).

Table A1. Reduce, reuse and recycling strategies for metals.

Reduce	Order materials efficiently to limit waste Measure and cut accurately Maintain an inventory of surplus materials to reduce over-supply at other sites
Reuse	Store cuttings in designated area for reuse Remove surplus materials and use them at other sites, where feasible
Recycle	Investigate pick up and hauling options for metals

Strategies for asphalt

Sources of asphalt include stripped road surface from parking areas and road surfaces. Potential waste asphalt management strategies are shown in Table A2 (CCA, 2001).

Table A2. Reduce, reuse and recycling strategies for asphalt

Reduce	Inspect deliveries and return damaged material to the supplier Minimize asphalt orders by carefully reviewing site plans and ordering only what is needed
Reuse	Limited opportunities for reuse
Recycle	Recovered and crushed pavement can be processed and used in road base, unpaved parking areas, new pavement, and asphalt shingles.

Strategies for concrete

Waste concrete can be crushed and recycled for use in aggregate road base and as aggregate fill. Potential management strategies for waste concrete are shown in Table A3 (CCA, 2001).

Table A3. Reduce, reuse and recycling strategies for waste concrete.

Reduce	Inspect deliveries and return damaged material to the supplier Pay careful attention to quantities when ordering to eliminate waste Consult with a forming contractor to develop a forming plan that limits waste wood
Reuse	Store unused concrete blocks in protected areas for later reuse Use excess concrete as barriers (*e.g.* parking stops)
Recycle	Separate re-bar from broken concrete for recycling Recycle waste concrete where possible - companies that take concrete include: ○ B.A. Blacktop Ltd. ○ Columbia LaFarge ○ Inner City Recycling ○ Mainland Sand and Gravel ○ Richvan Holdings Ltd. ○ RDM ○ Urban Wood Waste Recyclers

Plastics and Vinyl

Plastics with adhesives can have limited recycling potential. Onsite plastics management programs can be complicated by having to segregate plastics by resin type (identified with the recycling number). Plastics management strategies should ideally focus on reducing plastics onsite.

Strategies for corrugated cardboard

Corrugated cardboard is used in packaging, storing and transporting. Cardboard covered in wax, grease, oil or paint is not considered recyclable and should be treated as waste (GVRD, 2004). Potential cardboard waste management strategies are shown in Table A4 (CCA, 2001).

Table A4. Reduce, reuse and recycling strategies for corrugated cardboard.

Reduce	Buy materials in bulk to minimize packaging wastes Have suppliers deliver materials with a minimum of packaging and transporting cardboard Try to use suppliers that will retrieve packaging cardboard and other materials
Reuse	Use cardboard on site, where feasible, to protect and store tools and other small construction materials
Recycle	Identify private cardboard recyclers who will provide bins / pick up **Crown Packaging** in Burnaby uses corrugated cardboard for gypsum wallboard liner, boxboard and middle corrugating medium

Wood

Wood waste can include pallets and buried (uncontaminated wood). Wood waste can be used in wood composites like panel board, building materials, like shingles and roof felt, pulp, animal bedding, mulch, soil amendments and even landfill cover. The following facilities accept wood waste in MetroVancouver:

- Matsqui Transfer Station
- Mini-load disposal
- Coquitlam construction Recycling Facility
- Wastech Services
- Cloverdale Fuel Ltd
- Langley Transfer Station
- Maple Ridge Transfer Station
- Basran Fuels
- North Shore Transfer Station
- Fraser Richmond Soil and Fibre
- Inner City recycling
- Urban Wood Waste Recyclers

Double M will also take clean waste wood, suitable for use in habitat compensation projects to their Maple Ridge site for storage.

ATTACHMENT 1: FISHERIES ACT S. 35(2) AUTHORIZATION
Authorization No 02-HPAC-PA1 -000-000144

Fisheries and Oceans | Pêches et Océans

ENVIRONMENT SCANNED

OCT 19 2007

FISHERIES ACT S. 35(2) AUTHORIZATION

AUTHORIZATION FOR WORKS OR UNDERTAKINGS AFFECTING FISH HABITAT

Authorization No. / PATH # : 02-HPAC-PA1-000-000144

Authorization issued to:

Company Name:	The Vancouver Port Authority ("VPA")
Contact:	Darrell Desjardin, Director of Environmental Programs
Address:	100 The Pointe 999 Canada Place Vancouver, B.C. V6C 3T4 Canada
Telephone:	604-665-9000
Fax:	1-866-284-4271

Location of Project:

The Deltaport Third Berth Project is located 35 km south of Vancouver, in Delta British Columbia at the existing Roberts Bank Port facility situated north of the BC Ferries Tsawwassen ferry terminal. The existing VPA facilities at Roberts Bank include Deltaport, a 65-hectare (160-acre) container terminal and Westshore Terminals, a 50-hectare (124-acre) bulk handling coal port facility. These terminals are connected to the mainland by a 4.1 km causeway, which supports road and rail infrastructure.

The GPS coordinates of the site are: 123:08:24degE, 49:01:12N

Valid Authorization Period:

The valid Authorization period for the Harmful Alteration, Disruption or Destruction of fish habitat associated with the construction of the Deltaport Third Berth Project is between January 2, 2007 and December 31, 2009; the valid authorization periods for the other conditions of this authorization are as set out below.

Description of Works or Undertakings:

Project Description:

The Deltaport Third Berth Project (the "Project") involves the construction a container terminal and third berth to the existing Deltaport container terminal;

- construction of a fill area of approximately 21.72 hectares of land for an expanded container storage yard;

- construction of a 430.2 m long caisson wharf extension caisson wharf to accommodate the third berth structure;
- dredging to deepen the channel along side of the Deltaport third berth;
- relocation of the tug moorage area located at Deltaport container terminal to the north side of the third berth;
- construction of habitat compensation works as described in condition 40.

Figure 2 in Schedule D provides a summary of the above referenced works. Detailed plans and specifications for the above referenced works have been provided to DFO and are included Schedule A.

Authorized Harmful Alteration, Disruption or Destruction of Fish Habitat:

The Harmful Alteration, Disruption or Destruction of fish habitat (HADD) hereby authorized is:

1. The placement of fill, including a partial rock dyke to contain fill material, new foreshore area and concrete caisson structures over an area approximately 21.86 hectares north east of the existing Roberts Bank Container Terminal (Areas 1-4 Figure 2 Schedule D). This construction will result in impacts to the existing intertidal and shallow subtidal marine habitats, including the permanent loss of approximately:
   a. 5 hectares of eelgrass;
   b. 300 m^2 of salt marsh;
   c. 10 hectares of intertidal sand/mudflat; and
   d. 6.9 hectares of subtidal mud.
2. Dredging of approximately 603,500 m^3 of geotechnically incompetent sediment from under the caissons and terminal area (including the relocated tug basin) with an estimated disposal volume for ocean disposal of 300,000 m^3 (Area 4 and 5 Figure 2 Schedule D). This construction will result in impacts to the existing shallow subtidal marine habitats.
3. The relocation of a tug berthing facility consisting of a 1.55m by 12.2 m walkway, a 1.55m by 15.24 m ramp and a 13.5 m by 83.0 m mooring barge, including installation of 11 steel piles on approximately 5.25 square metres of seabed and foreshore adjacent to the north west side of the third (Area 4 Figure 2 Schedule D). The relocated berthing facility will result in impacts to the existing shallow subtidal marine habitats.
4. Dredging of approximately 249,500 m^3 to deepen the ship channel from about –12 to -14 m chart datum (CD) to –15.85 m CD deep for 350 m along the third berth face alignment in existing subtidal mud with an estimated disposal volume of 175,000 m^3 (Area 6 Figure 2 Schedule D). This construction will result in impacts to the existing shallow subtidal marine habitats.

Area	Dredge Volume	Disposal Volume
Dredging under Caissons and Terminal Area (including tug basin)	603,500	300,000
Dredging of Ship Channel	249,500	175,000
TOTAL (estimated) Actual Disposal Volume is based on amount of geotechnically competent dredged material that can be recovered for terminal fill. Monitoring will be done pursuant to the conditions of the Part VI CEPA Ocean Disposal Permit.	853,000	475,000

Figure 2 in Schedule D provides a summary of the above referenced construction footprint impacts (Areas 1-6).

No other harmful alteration disruption or destruction is authorized by this document.

Conditions of Authorization:

Responsibility for Plans and Works

1. The VPA confirms that all plans and specifications relating to this Authorization have been duly prepared and reviewed by appropriate professionals working on behalf of the VPA. The VPA acknowledges that it is solely responsible for all design, safety, and workmanship aspects of the works associated with this Authorization.

2. The VPA confirms that the location and design of the works are to be consistent with the information attached as schedules to this authorization and that any deviations from such designs, that may impact fish habitat, must be reviewed and approved by DFO and other agencies having jurisdiction in this matter. VPA is responsible to ensure compliance of all conditions in this Authorization.

3. The VPA recognizes that the designs and construction methods for two habitat compensation elements, the Sand Bar Stabilization and the Log Removal and Tidal Channel Restoration, are not complete at the time of issuance of this Authorization and, therefore, have not been approved by DFO. See conditions 40 thru 44

4. The conditions of this Authorization notwithstanding, DFO may at any time and at their sole discretion direct the VPA, and/ or their agents, and/ or contractors, to suspend or alter any work or activity associated with this project to avoid or mitigate adverse impacts to fish or other aquatic resources. Further, DFO may at any time and at their sole discretion, direct VPA, and/ or their agents, and/ or contractors to carry out at VPA's own expense any works or activities deemed necessary by DFO to avoid or mitigate adverse impacts to fisheries resources.

Conditions that Relate to the Construction of the Project, and Compensation Works

Notifications:

5. For the purposes of this Authorization, the Chief of Environmental Assessment Major Projects (EAMP), Oceans, Habitat and Enhancement Branch, ("DFO"), or their designate, shall be the formal contact and representative of DFO. In the absence of an EAMP Chief, the DFO Regional Director General, Pacific Region, or their designate; or the Minister of Fisheries and Oceans, or their designate, shall be the DFO contact and representative.

6. Please ensure that our File Number (02-HPAC-PA1-000-000144) appears on all correspondence, documents and plans.

7. The following personnel must be contacted and advised of the schedule of all marine works a minimum of five (5) days in advance of the works commencing:
    a. Fisheries and Oceans Canada, Conservation and Protection Field Supervisor in Steveston (telephone 604-664-9250, Fax 604-664-9055)
    b. DFO Habitat Biologist, Brad Fanos (telephone 604-666-0845, Fax 604-666-6627)

8. VPA shall complete the construction of the Project and associated works in the manner described in the VPA's Construction Environmental Management Plan attached as Schedule B.

Environmental Windows / Weather and Water Conditions

9. Work on the project involving the seabed, foreshore, and immediately adjacent upland shall not start prior to January 2, 2007, and shall be completed by December 31, 2009.

10. All work seaward of Higher High Water Level, i.e., 4.8 m chart datum ("HHWL") and shallower than -5m, shall be carried out in the dry, during periods of low water, or in isolation of tidal waters to the satisfaction of DFO,. The VPA, and/ or their agents, and/ or contractors will follow the mitigation measures that are detailed in the Construction Environmental Management Plan attached as Schedule B.

11. Work on the Project involving the seabed, foreshore, and immediately adjacent uplands will adhere to the DFO fisheries sensitive periods to avoid impacts to fish and fish habitat:

    The DFO fisheries sensitive periods are:

    a. No dredging is permitted in waters less than -5 m CD deep from March 1 to August 15 for the protection of juvenile salmon unless the works area is adequately isolated from fish bearing waters to the satisfaction of DFO;
    b. From October 15 to March 31 there shall be no works conducted which would result in a significant disturbance to the seabed of outer Roberts Bank which is situated in water greater than -5 m CD deep at daily low water for the protection of adult ovigerous female Dungeness crabs; and
    c. Any works proposed within the above referenced work windows will require DFO review and approvals.

Environmental Management Plans and Attached Schedules

12. The VPA, and/or their agents, and/or contractors will adhere to all Schedules and appropriate Environmental Management Plans (EMP) attached as Schedules to this Authorization to mitigate potential negative impacts to fish, and fish habitat during the construction of the Project. The schedules and elements of the EMPs, which relate to the protection of fish and fish habitat are hereby incorporated and form part of this authorization and must be complied with by VPA.

Dredging and excavation

13. All dredging, excavation and filling at the site shall be carried out using best management practices, and the most suitable methods and equipment, to minimise adverse environmental effects (as described in the Construction EMP in Schedule B). Dredging operations at the site shall be isolated to the satisfaction of DFO, and shall be carried out such that the dispersal of dredged material is restricted to the immediate work area.

14. All materials dredged or excavated from the seabed, foreshore, or upland in association with the project shall be appropriately disposed of at an appropriate upland or ocean disposal site in accordance with all applicable legislation, guidelines, and best management practices.

Sediment and Turbidity of Marine Waters

15. Sediment or sediment-laden waters or other deleterious substances shall not be permitted to enter the aquatic environment during the work. All works and activities, including in-water works and works over or adjacent to the water will be carried out in compliance with the following water criteria:

    - When background is less than or equal to 50 nephelometric turbidity units (NTU) induced turbidity should not exceed 5 NTU above the background value;
    - When background is greater than 50 NTU, induced turbidity should not exceed the background values by more than 10% of the background value;
    - When background is less than or equal to 100 milligrams per litre (mg/L) non-filterable residue (NFR) induced NFR should not exceed 10 mg/L above the background value; or
    - When background is greater than 100 mg/L NFR, induced NFR should not exceed 10 % of the background value.

    For the purposes of this Authorization, background shall be defined as the level at an appropriate adjacent reference site that is affected neither by works at the site, nor sediment-laden or turbid waters resulting from works at the site.

Marine Works / Diversions /Fish Salvages

16. All freshwater instream construction activities must be conducted in isolation of flowing water. Generally this is accomplished by temporarily diverting, enclosing or pumping the water around the work site. Flow to downstream portions of the site must not be cut off at any time during the diversion. The point of discharge to the watercourse must be located immediately downstream of the work site and must discharge to an energy dissipater to mitigate erosion of the stream channel. An extra pump should be on-site in the event of a pump malfunction.

17. Prior to conducting instream works in freshwater or marine works below the HHWL (e.g. initiating containment dyke and filling works below 4.8M CD) a fish and Dungeness crab salvage must be conducted by a qualified environmental monitor. All appropriate fish collection permits must be obtained prior to the commencement of any marine works.

18. The proponent must retain a qualified environmental consultant, approved by DFO, to undertake a fish salvage prior to commencement of works. The environmental consultant must obtain all necessary permits required by fisheries regulations.

Machine Use

19. Machinery is to work from the bank of the HHWL mark and is not permitted to cross or work within the intertidal habitats that are not appropriately isolated from marine waters.

Access and work behind the containment berm will be permitted, subject to implementation of appropriate BMP's and isolation from marine waters to the satisfaction of DFO.

20. All equipment and machinery working within fifteen (15) meters of freshwater watercourses or the HHWL mark of the marine environment must be in good working condition (power washed) and free of leaks or excess oil and grease. No fuels, lubricants, construction wastes or other deleterious substances may enter any ditch, watercourse, ravine or storm sewer system.

21. No equipment refuelling or servicing or storage of fuel, paints etc. may be undertaken within fifteen (15) meters of any freshwater watercourse or the HHWL mark of the marine environment

No Release of Deleterious Substances

22. The VPA shall ensure that cement, uncured concrete, concrete leachate, hydrocarbon products (e.g. fuel, oil, hydraulic fluid, lubricants), and any other deleterious substances (i.e. substances harmful to fish), shall be prevented from entering the marine environment at the project site at any time during the Third Berth Project. The VPA, and/ or their agents, and/ or contractors will follow the best management practices and mitigations outlined in Schedule B – Water Quality EMP.

Clean Materials

23. All materials used for works associated with this project fill activities shall be clean material, free of fines, organic material, and contaminants, and deleterious substances (i.e., substances harmful to fish).

Ground Densification and Pile Driving

24. Ground densification works and activities at the site ("densification") shall be conducted such that sediment, sediment laden water, turbid water, and deleterious substances generated by or associated with densification are prevented, to the satisfaction of DFO, from entering into the marine environment. To this end, all densification, including vibro-floatation, shall be carried out on lands above Higher High Water, i.e., 4.8 m chart datum (HHWL), and in isolation from the marine environment to the satisfaction of DFO, or in waters greater than -5 m CD deep at daily low water.

25. The *Fisheries Act* prohibits the destruction of fish (i.e., killing of fish) by means other than fishing. Without the implementation of appropriate mitigation measures certain pile driving activities can kill fish; therefore, it is the VPA, and/ or their agents, and/ or contractors responsibility to ensure that appropriate mitigation measures are employed when and where necessary to ensure that the Project does not kill fish.

Spill Contingency and Clean-up Plan

26. The VPA, and/ or their agents, and/ or contractors will conduct spill and emergency clean-up following all appropriate best management practices, and the most suitable methods and equipment, to minimise adverse environmental effects (as described in the Spill

Contingency and Clean-up Plan EMP in Schedule B). Dredging operations at the site shall be isolated to the satisfaction of DFO, and shall be carried out such that the dispersal of dredged material is restricted to the immediate work area or to designated ocean disposal site(s).

Stormwater and Surface Runoff (during and post construction)

27. A sediment, erosion and runoff control plan, prepared by a qualified trained professional, must be developed and implemented prior to site preparation and construction. These facilities must be maintained until occupancy permit stage or until no longer applicable to site conditions. Moreover, it is the responsibility of the VPA and/ or their agents and/ or contractors to ensure that these facilities are maintained and working adequately to control all discharges from the site.

28. The VPA confirms that a permanent stormwater system using an appropriate and proven effective combined oil/ water separators, sedimentation tanks and storm outfall shut-off valves will be incorporated into the terminal stormwater treatment system to contain oil and gasoline runoff from the terminal operation area. It is the responsibility of the VPA and/ or their agents, and/ or contractors to provide adequate ongoing maintenance to ensure the effectiveness of such facilities and to avoid the deposition of deleterious substances into the receiving watercourse. A maintenance schedule must be developed, and the maintenance carried out for the life of the operation of the project by the terminal operator or responsible authority. Include reference to appropriate EMP

Environmental Monitoring During Project Construction

29. All works associated with the Project that have, in the opinion of DFO, the potential for adverse impacts to fisheries resources including marine mammals, shall be monitored by an appropriately qualified individual(s), (the "environmental monitor") deemed to be satisfactory by DFO. The acceptability of nominees for environmental monitor shall be confirmed with DFO prior to the nominee(s) working as an environmental monitor on the Project. Due to the Project construction activities and potential effects on the marine environment, there may be more than one "environmental monitor" on the Project to reflect the required expertise. The environmental monitoring activities will be coordinated by VPA.

30. The environmental monitor shall, in consultation with, and at the discretion of DFO, monitor and direct all works on the Project to ensure compliance with the *Fisheries Act*, and all other applicable legislation, guidelines, and best management practices; and compliance with the terms and conditions of this Authorization. The foregoing notwithstanding, the authority of the environmental monitor is subject always to the discretion of DFO. DFO does not delegate any authority under the *Fisheries Act* to the environmental monitor. The environmental monitor does not have the authority to change, modify, or revise, either the Project or the terms and conditions of the Authorization.

Monitor's Authorization

31. The environmental monitor shall be empowered, in writing, to direct or stop works and apply mitigation as necessary for the Project to ensure compliance with the *Fisheries Act,* and compliance with the terms and conditions of the Authorization.

Scheduling of Environmental Monitoring During Construction

32. The environmental monitor(s) accepted by DFO shall be at the project site at all times when there is, in the opinion of DFO, the potential for adverse impacts to fisheries resources resulting from work on the Project, and particularly during works, over, within or adjacent to the marine environment. The acceptability of alternate scheduling for environmental monitoring shall be determined in consultation with DFO.

Monitor's reporting

33. Whenever there is the potential for adverse impacts to fisheries resources resulting from work on the project, and particularly during works on the foreshore, intertidal or subtidal areas, or adjacent upland areas, DFO shall be provided with written weekly reports from the environmental monitor. The weekly reports will be provided for the duration of the Project construction and shall include, but shall not be limited to, the following:

    a. A summary of the works carried out or undertaken that week.
    b. Commentary on the works and the work area from an environmental perspective (e.g., whether or not fish are present along the shore at the site, the turbidity of the water, marine mammal activity).
    c. Water quality measurement of marine waters at the site and in the vicinity of works such as shoreline preparation, dredging, ground densification and fill and rock placement. Measurements shall include reference and sample sites as approved by DFO.
    d. A summary of marine mammal monitoring activities and results;
    e. Identification of any environmental issues or impacts that arose or occurred and details of specific mitigation measures put in place to address environmental issues and impacts.

    These weekly reports shall be provided to DFO the same week as the work they cover. Facsimile transmissions may be sent to DFO Environment Assessment Major Projects (EAMP) at [604] 666-7907 to the attention of the Chief or to an e-mail address as may be specified.

    In addition, the monitor must notify DFO, immediately, of any event that has caused, or may cause, an unauthorized HADD or the release of a deleterious substance into the aquatic environment.

34. In addition to the weekly reports from the on site environmental monitor, following completion of in-water works and/or phases of works adjacent to the shore, DFO shall be provided with a summary report including the following:

    a. A summary of works carried out or undertaken in association with the project.

    b. Comments on the works from an environmental perspective.

c. Identification of any environmental issues and impacts that arose or occurred and details of specific mitigation measures put in place to address environmental issues and impacts.

d. Detailed engineering drawings, stamped and sealed by an appropriately qualified professional, showing the works associated with this project as they have been built (i.e., 'as-built' drawings).

This report shall be provided to DFO to the attention of the EAMP Chief within 60 days of the completion of any significant phase of works adjacent to the shore.

Marine Mammal Monitoring Program During Construction and Initial Operation

35. The VPA will comply with the "marine mammal monitoring program", attached as Schedule C, that sets out
    a. Monitoring and survey activities to assess presence of killer whales within the Project area, measured zones of audibility;
    b. Acoustic threshold triggers and mitigation measures to reduce potential effects on killer whales through the reduction or elimination of underwater noise when whales are present within the measured zones of audibility of the Project area.
    c. Phase 2 modeling study and results will be completed and provided to DFO prior to the initiation of construction activities that generate underwater acoustic levels that have the potential to negatively affect killer whales. The results of Phase 2 will be used to develop appropriate marine mammal monitoring survey methods (may include visual and underwater acoustic hydrophone) to monitor killer whale presence in the zone of acoustic influence under all visibility conditions. Final survey methods will be prepared and submitted to DFO for review and approval prior to Jan 31, 2007.

36. Marine mammal monitoring methods and surveys (35. c above) will be conducted daily during all construction activities that generate underwater acoustic levels that have the potential to negatively affect killer whales:
    a. Intensive surveys will be conducted daily and fulltime as described in Phase 2; and
    b. Extensive surveys will be conducted daily and part time as described in Phase 7.

37. The VPA will provide DFO with:
    a. Weekly summary reporting on marine mammal monitoring results will be coordinated with and included as part of the weekly construction monitoring reports described in condition 33.
    b. Summary reporting to be completed with in 4 weeks of the competition of each Phase of the marine mammal monitoring program that summarize the results and effectiveness for each phase.
    c. Data and preliminary analysis results for all phases of the Marine Mammal Monitoring Program will be made available to DFO upon request.

38. The environmental monitor for the "marine mammal monitoring program" shall monitor and direct all works, including the cessation of works, on the Project to reduce potential effects

on killer whales and to ensure compliance with the *Fisheries Act*, *SARA* and all other applicable legislation, guidelines, and best management practices; and compliance with the terms and conditions of the Authorization to reduce potential effects on marine mammals.

39. The marine mammal monitoring program will be conducted by a qualified biologist or other professional who is experienced in the area of conducting similar marine mammal monitoring work.

Conditions that Relate to Onsite Compensatory Habitat

40. The VPA agrees to build the compensatory works according to the Deltaport Third Berth Habitat Compensation Plan (HCP, as outlined in "Vancouver Port Authority Deltaport Third Berth Submission of Information for Fisheries Act Authorization Habitat Compensation Program" attached as Schedule D and following and the habitat compensation construction schedule attached in Schedule E.

    The HCP consists of five onsite components:

    a. East Causeway ;

    b. Log Removal and Tidal Channel Restoration;

    c. Caisson Refugia;

    d. Subtidal Reef; and

    e. Sand Bar Stabilization (Dendritic Channel Modification).

41. All five habitat compensation elements are to be constructed as described in Schedule D and the detailed engineering drawings attached as Schedule F.

42. The VPA confirms that all appropriate agreements and permissions have been obtained to complete the habitat compensation works and that all appropriate permits and licences will be obtained from other regulatory agencies prior to initiating construction.

43. Final designs for the Log Removal and Tidal Channel Restoration (condition 40.b) habitat compensation works will be prepared and submitted to DFO for review and approval by May 31, 2007 or such other date as agreed to by DFO and prior to these compensatory works proceeding.

Contingency Plan for Failure of Compensatory Works

44. Final designs for the Sand Bar Stabilization (condition 40.e) habitat compensation works will be prepared and submitted to DFO for review and approval by January 31, 2007 or such other date as agreed to by DFO and prior to these compensatory works proceeding.

    a. In the event the final design and construction plans for the Sand Bar Stabilization works are not approved by DFO, the VPA agrees to the contingency of develop an alternative habitat compensation plan involving the creation of a minimum of 5 ha of productive fish

habitat. This contingency plan must be developed and presented to DFO by the 31th of March 2007;

b. In the event the contingency plan (41.a) is not approved by DFO, the VPA agrees to fund a third Party, chosen by DFO, in the amount of $500,000.00 Can., within two weeks of written notification to this effect from DFO, for the development of appropriate fish habitat in the Fraser River estuary.

45. If ongoing monitoring identifies any elements of the habitat compensation works are not functioning as intended, the VPA is responsible for completing any appropriate remedial works to ensure the compensatory habitat is stable and is functioning as intended, pursuant to this Authorization.

46. If after the completion of the Habitat Compensation Effectiveness Monitoring Program (condition 45 thru 49) the habitat compensation works are not functioning as intended and further remedial work is not likely to rectify the situation. The VPA shall work with DFO to identify and then carry out alternative compensatory works to the satisfaction of DFO.

Conditions that Relate to Habitat Compensation Effectiveness Monitoring

47. The VPA shall carry out, to the satisfaction of DFO, a Habitat Monitoring Program to assess the form and function of the fish habitat compensation associated with the Project (Condition 40) and their success and productivity as fish habitat. The VPA will implement the "habitat monitoring program" attached as Schedule H.

a. The Monitoring Program includes pre-development and post development monitoring;

b. The VPA shall identify appropriate reference sites (the "reference sites"), which are satisfactory to DFO, for incorporation into the habitat monitoring program. Appropriate reference sites will be suitable areas of existing fish habitat which are adjacent to the project site and have demonstrated biophysical nature similar to that of project site habitat.

c. The habitat monitoring program varies with each habitat compensation feature and includes quantitative surveys and assessments (during years 1, 2, 3, 5, and 8 (or as otherwise noted in the monitoring program) and annual qualitative surveys and assessments on years when the quantitative surveys are not conducted.

d. The habitat monitoring program will be conducted by a qualified biologist or other professional who is experienced in each area conducting work for similar habitat compensation features.

48. Data and preliminary analysis results for each of the compensatory habitat monitoring events will be made available to DFO upon request.

49. Annual comprehensive habitat compensation effectiveness monitoring reports with full data analyses will be provided to DFO within 3 months of the completion of each annual monitoring occasion or prior to December 31 of each calendar year, which ever comes first.

Determining Success of Compensatory Habitats

50. The success of the compensatory habitats shall be determined in accordance with the methods laid out in the habitat monitoring program (Schedule H). The compensatory habitat will be deemed to be functioning as intended if, in the opinion of DFO, the habitats are physically stable and the productivity, and growth of marine organisms associated with these habitats are similar in nature to, and exhibits the same or better growth characteristics, and the same or greater abundance as the marine organisms at the reference sites and if the productivity in terms of fish habitat is equal to or greater than that which existed prior to the Project

51. Following the initial eight (8) year monitoring period, and any extensions thereof, DFO will assess the success of the habitat compensation works and determine whether or not they are functioning as intended, and choose the appropriate course of action as outlined below:

    a. the habitat compensation works are functioning as intended, pursuant to this Authorization and will be self-sustaining without further remedial work. The Monitoring Program will be terminated;

    b. the habitat compensation works are not functioning as intended. The VPA shall extend the Monitoring Program, including remedial work, for an additional two years to allow more time for the habitat to become adequately established; or

    c. the habitat compensation works are not functioning as intended and further remedial work is not likely to rectify the situation. The VPA shall work with DFO to identify and then carry out alternative compensatory works.

Protection of Compensatory Habitats

52. All compensatory fish habitat associated with the Project shall be considered to be fish habitat pursuant to section 35 of the *Fisheries Act*. The VPA shall not carry on any work or undertaking that will adversely disturb or this habitat, and will take all reasonable steps to ensure that the habitats are not disturbed by others.

Remedial Works

53. The VPA shall ensure that the fish habitat associated with the Project including the compensation habitat (condition 38) as described in detail in Schedule D continue to function as productive fish habitat for the lifetime of the Project operation. If at any time during the lifetime of the Project operation the VPA becomes aware that the fish habitats are not functioning as intended, for example, by reason of erosion or damage by waterborne debris, the VPA shall carry out any works necessary to enable the habitats to function as intended, to the satisfaction of DFO.

Offsite Habitat Compensation Agreement

54. The VPA has agreed to complete the offsite habitat compensation plan that is described in the Deltaport Third Berth Habitat Compensation Plan (as outlined in "Vancouver Port Authority Deltaport Third Berth Submission of Information for Fisheries Act Authorization

Habitat Compensation Program", Schedule D, and outlined in the Fish and Migratory Bird Habitat Agreement (dated Dec 4, 2006) between VPA, Fisheries and Oceans Canada, Environment Canada, Ducks Unlimited Canada and the Pacific Salmon Foundation (Attached in Schedule G).

Conditions that Relate to Financial Security

55. The VPA shall provide DFO with a Letter of Credit in the sum of $ 1.4 million dollars to act as a performance bond for the obligations of the VPA with respect to the habitat compensation monitoring requirements described in the Authorization. DFO may draw on the Letter of Credit and apply the proceeds towards the requirements described in the Authorization as deemed appropriate by DFO at its sole discretion. The Letters of Credit shall be unconditional and irrevocable; and automatically extend without amendment from year to year. The bank shall give DFO ninety (90) days written notice should the bank elect not to extend a letter of credit for any additional period (the "Expiry Date"). Upon demand, the bank shall pay DFO the amount demanded without inquiring whether DFO has the right to such amount. Draws on the Letter of Credit by DFO shall be permitted at anytime on or before the Expiry Date. Partial draws shall be permitted.

56. After the Project has been completed, and the VPA has fulfilled the requirements and obligations of this Authorization to the satisfaction of DFO, DFO shall return to the VPA, within a reasonable period of time, any letter of credit then held by DFO. The determination of whether works have been successfully concluded, whether a component of the Project has been completed, and whether the VPA has fulfilled the requirements and obligations of this Authorization shall be at the sole discretion of DFO. In making their determination, DFO will consider the terms of this Authorization, and other information, including the results of any monitoring programs.

Independent Monitoring and Auditing of the Authorization

57. VPA will fund a third party mutually agreed to by the parties to this Authorization (the Auditor) to audit the monitoring reports against the conditions of the Authorization to ensure that its terms and conditions are met. The Auditor will document the results of each audit, and send these in the form of a report to DFO and the VPA within 3 weeks of the conclusion of each audit.

58. The details and terms of reference of the audit plan and reporting format will be prepared in consultation with the VPA, DFO and the Auditor, with a final plan completed prior to January 31, 2007. The completed Audit Plan will be attached as Schedule I.

59. The Audit Plan (Schedule I) will include :

    a. Auditing will be conducted at the following frequency consistent with the Project Construction Schedule included in Schedule D:

        i. Years 1, 2 and 3 the Auditor will complete two audits per year;

        ii. Years 4, 5, 6, 7, and 8 the Auditor will complete one audit per year;

    b. Auditing will include onsite field assessments to confirm the accuracy of the Monitoring results provided.

Authorization:

The holder of this Authorization is hereby authorized under the authority of Section 35(2) of the *Fisheries Act*, R.S.C., 1985, c.F.14, to carry out the work or undertaking described herein.

This Authorization is valid only with respect to fish habitat and for no other purposes. It does not purport to release the applicant from any obligation to obtain permission from or to comply with the requirements of any other regulatory agencies.

Failure to comply with any condition of this Authorization may result in charges under the *Fisheries Act*.

This Authorization form should be held on site and work crews should be made familiar with the conditions attached.

Date of issuance: December 19, 2006

Approved by: [signature] for Adam Silverstein
Chief

Title: Chief, Environmental Assessment Major Projects
Oceans, Habitat and Enhancement Branch

Fisheries and Oceans Canada

VPA acknowledges that Fisheries and Oceans Canada has consulted with it regarding the terms of this Authorization, and confirms that it has reviewed and understands the terms of this Authorization, and agrees to the terms contained therein.

Executed by an authorized signatory of the VPA on the 18 th day of December, 2006, in the presence of:

[signature]	)	Per: [signature]
Witness (signature)	)	Authorized signatory
J. Dean Readman	)	Captain Gordon Houston
Name (print)	)	Name (print)
Corporate Secretary	)	President and CEO
Title	)	Title

List of Schedules:

A Construction drawings

B Construction Environmental Management Plan
- Marine Environmental Management Plan
- Marine Water Quality Management Plan
- Surface Water Quality and Sediment Control Management Plan
- Hazardous Waste Management and Spill Control Plan

C Marine Mammal Monitoring Program: Construction and Operation Deltaport Third Berth Project

D Vancouver Port Authority Deltaport Third Berth Submission of Information for Fisheries Act Authorization Habitat Compensation Program, dated December 1, 2006

E Habitat Compensation Construction Schedule

F Habitat Compensation Drawings

G Off-site Habitat Compensation 5 Party Agreement

H Habitat Monitoring Program

I Independent Monitoring and Auditing of the Authorization

ATTACHMENT 2: FISHERIES ACT S. 35(2) AUTHORIZATION
Authorization No 02-HPAC-PA1 -000-000144-2

Fisheries and Oceans | Pêches et Océans

Authorization No. : 02-HPAC-PA1-000-000144-2

AUTHORIZATION FOR WORKS OR UNDERTAKINGS AFFECTING FISH HABITAT

Authorization issued to:

Company Name:	The Vancouver Fraser Port Authority ("VFPA")
Contact:	Darrell Desjardin
Title:	Director, Environmental Programs
Address:	100 The Pointe 999 Canada Place Vancouver, B.C. V6C 3T4
Telephone:	604-665-9000
Fax:	1-866-284-4271

Location of Project:

The VFPA is proposing to construct a temporary barge facility within the newly constructed tug basin at Deltaport's Third Berth. Deltaport is located 35 km south of Vancouver in Delta, British Columbia at the existing Roberts Bank port facility situated north of the BC Ferries Tsawwassen ferry terminal. The existing VFPA facilities at Roberts Bank include Deltaport, a container terminal, and Westshore Terminals, a bulk handling coal port facility. These terminals are connected to the mainland by a 4.1 km causeway, which supports road and rail infrastructure.

The GPS coordinates of the Deltaport Third Berth are: 123:08:24degE, 49:01:12N

Valid Authorization Period:

The valid authorization period for the harmful alteration, disruption and/or destruction of fish habitat associated with the work or undertaking is:

From:	To:
December 4, 2008	**December 4, 2012**

The valid authorization periods for the other conditions of this authorization are as set out below.

Description of Works or Undertakings:

The VFPA is proposing to construct a temporary barge facility at its new tug basin located north west of the Deltaport Third Berth, which is currently under construction. The barge facility is being proposed to reduce the truck traffic required to complete construction of the Third Berth and to facilitate the construction of fish habitat compensation on the east side of the causeway. The operation of the barge facility will be limited to an "as needed" basis for delivery and/or exportation of aggregate materials, as tide levels allow.

The construction of the temporary barge facility will involve the following:

- Construction of a fill area of approximately 1400 m^2;
- Installation of a 15.24 m barge ramp, including piles to support the pivot ramp;

- Relocation of a small craft float, and installation of access ramp and landing float, to south of Seaspan Barge 912;
- The relocation of approximately 35 metres of the crest protection/rip rap slope to facilitate barge access to the facility;
- Placing imported dyke core rock;
- Installation of rip rap for slope protection;
- Installation of a tied-back retaining wall/abutment, including four foundation piles (barge berth);
- Installation of two mooring piles for the barge berth;
- Installation of piles for small craft float and landing float;
- Placement of granular sub-base on top surface of barge berth surface; and,
- Dredging and disposal off site of up to 1500 m^3 of native seabed material.

The proposed works, hereafter referred to as "the Project" are more specifically described in the following documents:

1. The report prepared by the VFPA in association with Moffat & Nichol, Klohn Crippen Berger titled, "Vancouver Fraser Port Authority Deltaport Third Berth Submission of Information for Fisheries Act Authorization – Barge Berth Ramp Facility", dated July 4, 2008.
2. The letter report from Patrick Craig of the VFPA to Jennifer Simpson of the Department of Fisheries and Oceans Canada (DFO) regarding "Authorization No./PATH#: 02-HPAC-PA1-000-000144 Port Metro Vancouver Deltaport Third Berth Barge Berth Facility", dated August 25, 2008, including its attachments.
3. The email and its attachment from Juergen Baumann of the VFPA to Jennifer Simpson of DFO dated September 5, 2008 at 2:13 PM regarding, "2008-09-05 to JSimpson proposed DP3 barge berth alternatives rejection.
4. The email and its attachments from Patrick Craig of the VFPA to Jennifer Simpson of the DFO, dated September 29, 2008 4:10PM, regarding, "DP3 barge berth – KC drawings".
5. The email and its attachments from Patrick Craig of the VFPA to Jennifer Simpson of DFO dated October 7, 2008 at 5:22 pm regarding, "DP3 Barge Berth – revised Habitat Inventory and Figures".
6. The email and its attachment from Patrick Craig of the VFPA to Jennifer Simpson of DFO, dated October 8, 2008 at 9:34 am regarding, "DP3 Barge Berth – revised Habitat Inventory and Figures".
7. The email and its attachments from Patrick Craig of the VFPA to Jennifer Simpson of DFO, dated November 3, 2008 at 1:00 PM regarding, "RE: DFO draft Authorization #02-HPAC-PA2-000-000144-2 DP3 Barge Berth – comments/corrections", including the addition to the drawing added by DFO.
8. The email and attachments from Patrick Craig of the VFPA to Jennifer Simpson of DFO, dated November 24, 2008 at 10:00 AM regarding, "draft Authorization #02-HPAC-PA1-000-000144-2 DP3 proposed Barge Berth".

The harmful alteration, disruption and/or destruction of fish habitat hereby authorized, in association with the Project, is limited to the following:

- The harmful alteration and/or destruction of no more than 894 square metres of intertidal eel grass habitat from the placement of fill to construct the barge facility;
- The harmful alteration and/or destruction of no more than 311 square metres of intertidal mudflat from the placement of fill to construct the barge facility;
- The harmful alteration, disruption and/or destruction of no more than 727 square metres of rocky intertidal habitat from the placement of fill to construct the barge facility;
- The harmful alteration, disruption and/or destruction of no more than 535 square metres of rocky sub-tidal habitat from the placement of fill to construct the barge facility;
- The harmful alteration, disruption and/or destruction of a total of no more than 450 square metres of intertidal eelgrass and/or mudflat, from erosion and/or the implementation of mitigation measures to prevent erosion, resulting from the construction of the barge facility and/or recent changes to the crest protection; and,
- The harmful alteration, disruption and/or destruction of a total of no more than 2000 square metres of intertidal and sub-tidal rocky habitat resulting from the removal of the barge facility; and,
- The harmful alteration, disruption and/or destruction of no more than 450 square metres of intertidal cobble and/or gravel habitat resulting from the removal of any mitigation measures implemented to arrest erosion resulting from the barge facility. The extent of harmful alteration authorized in this situation is limited to that equal to the area covered by the mitigation measures.

Conditions of Authorization:

1. The conditions of this Authorization notwithstanding, should the above works or undertaking, due to weather conditions, different soil or other natural conditions, or for any other reason, appear, in the opinion of the Department of Fisheries and Oceans ("DFO") likely to cause greater impacts than the parties previously contemplated, then DFO may direct the Proponent, and its agents, and contractors, to suspend or alter works and activities associated with the project, to avoid or mitigate adverse impacts to fisheries resources. DFO may also direct the Proponent and its agents, and contractors, to carry out at the Proponent's expense any works or activities deemed necessary by DFO to avoid or mitigate further adverse impacts to fisheries resources. In circumstances where DFO is of the view that greater impacts may occur than were contemplated by the parties DFO may also modify or rescind this authorization. If the authorization is to be changed the Proponent will be given an opportunity to discuss any proposed modifications or rescission.

Responsibility for Plans and Works

2. The VFPA confirms that all plans and specifications relating to this Authorization have been duly prepared and reviewed by appropriate professionals working on behalf of the VFPA. The VFPA acknowledges that it is solely responsible for all design, safety, and workmanship aspects of the works associated with this Authorization.

3. The construction of the Project must comply with the terms and conditions of this Authorization. Harmful alteration, disruption or destruction of fish habitat other than that specifically identified within this Authorization is not permitted.

4. The VFPA confirms that the location and design of the works are to be consistent with the information attached as schedules to this authorization and that any deviations from such designs, that may impact fish habitat, must be reviewed and approved by DFO and other agencies having jurisdiction in this matter. For any such design deviations VFPA shall submit a detailed written proposal to DFO well in advance of the date proposed for implementation of changes in order to allow DFO to conduct a proper review.

Conditions that Relate to the Construction of the Project and Compensation Works

Notifications:

5. For the purposes of this Authorization, the Chief of Environmental Assessment Major Projects (EAMP), Oceans, Habitat and Enhancement Branch, ("DFO"), or their designate, shall be the formal contact and representative of DFO. In the absence of an EAMP Chief, the DFO Regional Director General, Pacific Region, or their designate; or the Minister of Fisheries and Oceans, or their designate, shall be the DFO contact and representative.

6. Please ensure that our File Number (02-HPAC-PA1-000-000144-2) appears on all correspondence, documents and plans.

7. The following personnel must be contacted and advised of the schedule of all marine works a minimum of five (5) days in advance of the works commencing:

    a. Fisheries and Oceans Canada, Conservation and Protection Field Supervisor in Steveston (telephone 604-664-9250, Fax 604-664-9255)

    b. DFO Environmental Assessment Analyst, Jennifer Simpson (telephone 604-666-4609, Fax 604-666-0417 and email Jennifer.Simpson@dfo-mpo.gc.ca)

8. VFPA shall complete the construction of the Project and associated works in the manner described in the documents included in Schedule A, unless modifications are required to ensure compliance with this Authorization.

Environmental Windows and Isolation of Works

9. Every effort should be made to schedule construction works to avoid the fisheries sensitive period for juvenile salmonids (i.e., March 1st to August 15th, inclusive).

10. If works are conducted during the fisheries sensitive period for juvenile salmonids (i.e., March 1st to August 15th, inclusive) they shall be conducted in the dry, as tides permit, or in isolation of fish bearing waters.

Environmental Management Plans and Attached Schedules

11. The VFPA, and/or their agents, and/or contractors will adhere to all Schedules and appropriate Environmental Management Plans (EMP) attached as Schedules to the Authorization for DP3 (i.e., DFO Authorization 02-HPAC-PA1-000-000144) to mitigate potential negative impacts to fish, and fish habitat during the construction of the Project. The schedules and elements of the EMPs, which relate to the protection of fish and fish habitat are hereby incorporated and form part of this authorization and must be complied with by VFPA.

Machine Use

12. Land-based machinery is to work from above the HHW mark or from within the footprint of the proposed works.
13. To ensure machinery operators are fully aware of the limits of the area authorized for impact (i.e., the area of fish habitat authorized for harmful alteration, disruption and/or destruction), the area should be surveyed and clearly marked. All individuals involved in the construction of the project should be advised of the need to ensure impacts beyond the surveyed area are prevented.
14. All power equipment used on or adjacent to the foreshore should be inspected daily by a competent individual prior to entry into the work area to ensure there are no visible leaks of fuel, hydraulic fluids, lubricants, etc. Any necessary repairs must be made before the equipment enters the work area.

No Release of Deleterious Substances

15. The VFPA shall ensure that deleterious substances (i.e., substances harmful to fish), are prevented from entering the marine environment during the construction, operation and removal of the facility and during the restoration of the site.

Sediment and Turbidity of Marine Waters

16. Sediment or sediment-laden waters or other deleterious substances shall not be permitted to enter the aquatic environment during the work. All works and activities, including in-water works and works over or adjacent to the water will be carried out in compliance with the following water criteria:

    - When background is less than or equal to 50 nephelometric turbidity units (NTU) induced turbidity should not exceed 5 NTU above the background value;
    - When background is greater than 50 NTU, induced turbidity should not exceed the background values by more than 10% of the background value;
    - When background is less than or equal to 100 milligrams per litre (mg/L) non-filterable residue (NFR) induced NFR should not exceed 10 mg/L above the background value; or
    - When background is greater than 100 mg/L NFR, induced NFR should not exceed 10 % of the background value.

    For the purposes of this Authorization, background shall be defined as the level at an appropriate adjacent reference site that is affected neither by works at the site, nor sediment-laden or turbid waters resulting from works at the site.

17. Silt curtains shall be used when necessary to ensure compliance with the terms of this Authorization and the *Fisheries Act*.

18. Should work on the Project result in NTU or NFR in excess of the criteria outside an area contained within a silt curtain, then those works and activities that might be contributing to the turbidity shall be halted until

measures are put in place to ensure compliance with the criteria to the satisfaction of DFO OHEB. Any such events shall be included in the Environmental Monitoring Report.

Concrete

19. All work associated with the Project involving the use of concrete, mortars, and other Portland cement or lime-containing construction materials shall be conducted so as to ensure that sediments, debris, concrete, and concrete fines are not deposited, either directly or indirectly, into the marine environment outside of the forms of cast in place structures.

20. Prior to pouring of concrete, all concrete forms shall be thoroughly inspected to ensure that form work is fully secured and sealed to prevent the release of concrete or concrete contaminated water into the marine environment. Where necessary, following placement of concrete it shall be covered with an appropriate material (e.g., plastic sheeting), as required, to seal the concrete from the marine environment until the concrete is significantly cured.

21. Any water contacting uncured or partly cured concrete or Portland cement or lime-containing construction materials, such as the water that may be used for exposed aggregate wash-off, wet curing, equipment washing, etc., shall be prevented from entering, directly or indirectly, the marine environment unless this water has been tested (to an accuracy of within +/- 0.2 pH units) and found to have a pH of between 6.5 and 9.0 pH units and a turbidity of less than 25 NTU (to an accuracy of within +/-2 NTU). Containment facilities shall be provided at the project site for the wash down water from concrete delivery trucks, concrete pumping equipment, and other tools and equipment, as required.

Fuel

22. Fuelling of equipment and storage of petroleum products (e.g., fuel, oil, lubricants) over or adjacent to the marine environment in association with the Project shall be appropriately contained and handled in compliance with all applicable guidelines, legislation, and best management practices.

Spill Contingency and Clean Up

23. An appropriate up-to-date spill prevention, containment and cleanup contingency plan for hydrocarbon products (e.g., fuel, oil, hydraulic fluid, lubricants), and all other deleterious substances that may be used in association with the Project, shall be put in place prior to work commencing. Appropriate containment and clean up materials shall be available at the Project site throughout the construction and operation of the facility and during the restoration of the site to its pre-barge facility condition.

24. All individuals working at the Project site shall be familiar with the spill response plan and the proper use and deployment of the spill response materials.

25. The VFPA, and/ or their agents, and/ or contractors will conduct spill and emergency clean-up following all appropriate best management practices, and the most suitable methods and equipment, to minimise adverse environmental effects (as described in the Spill Contingency and Clean-up Plan EMP in Schedule B of DFO authorization 02-HPAC-PA1-000-000144).

Clean Materials

26. All materials used in the construction of the project, including filter rock, rip rap, ground improvement material, and shore armouring or surfacing, shall be clean material, free of fines (except as allowed by terminal specifications), organic material, and deleterious substances (i.e., substances harmful to fish).

Pile Driving

27. The *Fisheries Act* prohibits the destruction of fish (i.e., killing of fish) by means other than fishing. Without the implementation of appropriate mitigation measures certain pile driving activities can kill fish; therefore, it is the VFPA, and/ or their agents, and/ or contractor's responsibility to ensure that appropriate mitigation measures are employed when and where necessary to ensure that the Project does not kill fish.

28. If methods of pile placement other than vibration are deemed necessary the VFPA will ensure a sound signature for the method of placement is developed and a potential zone of disturbance for killer whales is identified.

Wastes

29. Debris and waste materials generated during these works shall be appropriately contained, collected, and disposed of at appropriate upland locations in accordance with all applicable legislation, guidelines, and best management practices. In this regard, it should be noted that burning of a wide range of materials, including creosote treated wood is restricted or prohibited. Wherever possible, re-use or re-cycling of recovered materials is encouraged.

Dredging

30. VFPA is proposing this facility with full knowledge that it will only be accessible during certain tide levels.

31. Dredging at the site shall be limited to the 1500 m^3 required to facilitate the construction of the facility.

32. Dredging to improve access for barges over a larger tidal range is not authorized.

Spillage

33. Loading and unloading of barges at this facility will be conducted in a manner that prevents spillage of material into the marine environment.

Preservatives and Other Coatings

34. All applicable legislation, guidelines, and best management practices shall be employed with respect to the application of wood preservatives and other coatings. Wherever practicable wood preservatives are to be applied at an appropriate upland location in the dry, sufficiently in advance of the installation of the treated timber to allow the preservative to completely absorb and prevent leaching into the marine environment. This condition applies to initial construction and to subsequent maintenance. The applicant may wish to refer to the Fisheries and Oceans Canada "Guidelines to Protect Fish and Fish Habitat From Treated Wood Used In Aquatic Environments in the Pacific Region" (Hutton, K.E. and S.C. Samis. 2000. Can. Tech. Rep. Fish. Aquat. Sci. 2314: vi + 34 p).

35. Alternatives to creosote treated wood should be utilized whenever possible.

36. Any barges or other vessels used during construction or removal of the facility shall not be permitted to ground on the foreshore or seabed or otherwise disturb the foreshore or seabed habitat or sediments (e.g., disturbance as a result of vessel propeller wash).

Operational Limitation on the Barge Facility

37. The operation of the facility will be restricted, as needed, to ensure marine equipment (i.e., barges, vessels, etc.) is prevented from grounding on the intertidal foreshore or seabed or otherwise disturbing the foreshore or seabed habitat or sediment (e.g., disturbance as a result of vessel propeller wash).

Removal of the Barge Facility

38. The barge facility is proposed as a temporary facility. The VFPA shall remove and restore the site to the conditions, which existed prior to the construction of the barge facility to ensure no net loss in the productive capacity of fish habitat results from the Project.

39. If possible, measures should be put in place during the construction of the facility to aid in its removal and the restoration of the site.

40. The methodology for removal and reconstruction of the site to its pre-barge facility condition shall be submitted to DFO as an environmental management plan.

41. The VFPA anticipates the barge facility shall remain in place for 24 months. In order to accommodate any unanticipated delays, which may cause the facility to remain in place longer than anticipated this Authorization shall accommodate the facility for 36 months. However, the structure shall be removed and the site restored by no later than 36 months following the signing of this Authorization.

Environmental Monitoring During Project Construction, Facility Removal and Restoration of the Site

42. All works associated with the Project that have, in the opinion of DFO, the potential for adverse impacts to fisheries resources, shall be monitored by an appropriately qualified individual(s), (the "environmental monitor") deemed to be satisfactory by DFO. The acceptability of nominees for environmental monitor shall be confirmed with DFO prior to the nominee(s) working as an environmental monitor on the Project.

43. The environmental monitor shall, in consultation with, and at the discretion of DFO, monitor and direct all works on the Project to ensure compliance with the *Fisheries Act*, the *Species at Risk Act*, and all other applicable legislation, guidelines, and best management practices; and compliance with the terms and conditions of this Authorization. The foregoing notwithstanding, the authority of the environmental monitor is subject always to the discretion of DFO. DFO does not delegate any authority under the *Fisheries Act* or the *Species at Risk Act* to the environmental monitor. The environmental monitor does not have the authority to change, modify, or revise, either the Project or the terms and conditions of the Authorization.

A qualified monitor is defined as a biologist or other professional who has previous training and/or experience in the required activities and whom is acceptable to DFO EAMP. To determine acceptability, DFO EAMP may request a resume and/or interview, and/or require that specific training has been completed by the professional to ensure that the environmental monitor is qualified. DFO EAMP reserves the right to refuse an environmental monitor should they not possess qualifications suitable for the works being undertaken.

Monitor's Authorization

44. The environmental monitor shall be empowered, in writing, to direct or stop works and apply mitigation as necessary for the Project to ensure compliance with the *Fisheries Act*, the *Species at Risk Act*, and compliance with the terms and conditions of the Authorization.

Scheduling of Environmental Monitoring During Construction

45. The environmental monitor(s) accepted by DFO shall be at the project site at all times when there is, in the opinion of DFO, the potential for adverse impacts to fisheries resources resulting from work on the Project, and particularly during works, over, within or adjacent to the marine environment.

46. At a minimum, the monitor shall be on site daily while work is occurring seaward of the current higher high water mark (i.e., during the construction and removal of the barge facility, and during the restoration of the site). The environmental monitor should be scheduled to be on site when new activities seaward of the existing higher high water mark are scheduled to begin (e.g., placement or removal of fill, etc.).

47. The acceptability of alternate scheduling for environmental monitoring shall be determined in consultation with DFO.

48. Monitoring for potential erosion of the intertidal mudflat around the barge facility and the recent modifications to the crest protection shall be reported weekly, during construction, operation and removal of the facility, and during restoration of the site and for two years following site restoration.

Monitor's reporting

49. Whenever there is the potential for adverse impacts to fisheries resources resulting from work on the project, and particularly during works on the foreshore, intertidal or sub-tidal areas, or adjacent upland areas, DFO shall be provided with written weekly reports from the environmental monitor. The weekly reports will be provided for the duration of the construction and removal of the facility and during the restoration of the site. The weekly reports shall include, but shall not be limited to, the following:

    a. A concise summary of the works carried out or undertaken that week (i.e., point form is preferred).
    b. Commentary on the works and the work area from an environmental perspective (e.g., whether or not fish are present along the shore at the site, the turbidity of the water, marine mammal activity).
    c. Water quality measurement of marine waters at the site and in the vicinity of works such as fill and rock placement. Measurements shall include reference and sample sites as approved by DFO.
    d. A summary of marine mammal monitoring activities and results;
    e. A summary of any erosion or deposition which may be occurring in or around the barge facility or recently altered crest protection. (In addition to the general construction environmental monitoring, potential issues associated with erosion of the intertidal mudflat and/or eel grass in the area of the barge facility or recently altered crest protection shall be monitored and reported to DFO weekly during operation of the facility and for two years following restoration of the site.); and,
    f. Identification of any environmental issues or impacts that arose or occurred and details of specific mitigation measures put in place to address environmental issues and impacts.

    These weekly reports shall be provided to DFO the same week as the work they cover. Facsimile transmissions may be sent to DFO Environment Assessment Major Projects (EAMP) at [604] 666-7907 to the attention of the Chief or to an e-mail address as may be specified.

    In addition, the monitor must notify DFO, immediately, of any event that has caused, or may cause, an unauthorized HADD or the release of a deleterious substance into the aquatic environment.

50. The monitoring reports for this Project may be combined/added to the monitoring reports submitted to DFO for the expansion of Deltaport Third Berth, as a requirement under DFO Authorization (02-HPAC-PA1-000-000144).

51. In addition to the weekly reports from the on site environmental monitor, following construction of the barge facility, the removal of the barge facility and restoration of the site, DFO shall be provided with summary reports, specific to this Project, which shall include the following:

    a. A summary of works carried out or undertaken in association with the project.

    b. Comments on the works from an environmental perspective.

    c. Identification of any environmental issues and impacts that arose or occurred and details of specific mitigation measures put in place to address environmental issues and impacts.

d. Detailed engineering drawings, stamped and sealed by an appropriately qualified professional, showing the works associated with the Project as they have been built (i.e., 'as-built' drawings) and survey drawings showing the site after restoration.

These reports shall be provided to DFO to the attention of the EAMP Chief within 60 days of the completion of the aforementioned stages of the Project.

Marine Mammals

52. In accordance with the *Species at Risk Act*, no person shall kill, harm, or harass killer whales. As such, no work or activity associated with this Project is allowed to kill, harm or harass killer whales.

53. If construction activities may result in the harassment of marine mammals via noise effects (e.g., pile driving of large diameter steel piles via impact hammer) a report must be submitted to DFO for review and approval prior to initiation of the proposed works. The report must outline the proposed works, the likely acoustic zone of potential disturbance, the mitigation measures proposed to prevent any impact to killer whales and any monitoring recommended for the proposed construction activity of concern. Any such report shall be prepared by professionals with appropriate expertise in acoustic effects on marine mammals.

Erosion

54. The area around the proposed barge facility may experience some erosion, as a result of the construction of the barge facility or the recent changes to the crest protection structure. As such, the area of mudflat and/or eel grass located around the barge facility and the recently modified section of the crest protection shall be monitored during construction of the barge facility, while the barge facility is in place, during site restoration and for two years following restoration.

55. If localized erosion occurs, the erosion shall be assessed and mitigation measures proposed by professionals with appropriate experience in coastal engineering. Any mitigation measures to arrest erosion shall be designed to minimise impacts to fish habitat and they should be designed, if possible, so they can be easily removed when the site is restored.

56. For the purpose of comparison, pre-construction conditions shall be well documented (i.e., existing conditions shall be surveyed).

57. The results of the monitoring to assess erosion on the intertidal mud flat and eelgrass around the barge facility and the tug basin shall be reported in the weekly environmental monitoring reports.

58. Prior to implementing any erosion mitigation measures, plans should be submitted to DFO for review and approval, unless time is of the essence and the measure would comply with this Authorization.

Compensation Fish Habitat

59. The VFPA confirms that all appropriate agreements and permissions have been obtained to construct the fish habitat compensation works and that all appropriate permits and licences will be obtained from other regulatory agencies prior to initiating construction.

60. The VFPA shall ensure the following measures are constructed as fish habitat compensation:

    a) The rock substrate of the compensatory reef overbuild, which totals 1800 square metres. It is located at an elevation of -4 to -4.5 m chart datum and extends up to 2.5 m outside of the original design boundary for the rip rap and is comprised of rock that has a diameter of 20 inch minus quarry run stone, with a nominal size of 8 inch;

    b) The 225 square metres of additional intertidal fish habitat compensation being created by replacing the originally proposed lock block retaining wall with a sheet pile retaining wall at the

east causeway habitat compensation site. The area will be located within the intertidal zone, at approximately +3.7m chart datum. The substrate for this new habitat will consist of gravel, cobble or sand;

c) For the time the barge facility remains in place, the habitat value provided by the slopes of the barge facility shall function as fish habitat compensation; and,

d) The removal of the barge facility and the restoration of the site to the condition which existed prior to the construction of the barge facility. The site shall be restored with the materials and in a manner that will allow the site to support the habitat features which existed prior to the construction of the barge facility (e.g., the site shall be restored and prepared with appropriate material and eelgrass shall be transplanted to the area).

61. Conditions 60. a), b), and c) are intended to offset the temporal loss of fish habitat productive capacity from the Project.

62. The removal of the barge facility and restoration of the site to its pre-barge facility condition, combined with the increase in productivity achieved in perpetuity from Condition 60 a) and b) are intended to ensure the Project achieves no net loss in the productive capacity of fish habitat over the long term.

Fish Habitat Compensation Monitoring

63. The VFPA shall carry out, to the satisfaction of DFO, a fish habitat compensation monitoring program to assess the form and function of the fish habitat compensation associated with the Project and its success and productivity as fish habitat. As such, the VFPA will implement the following "Fish Habitat Compensation Monitoring Program" (i.e., the Compensation Monitoring Program).

a. The Compensation Monitoring Program shall be divided into two phases:

1) The first phase being the monitoring of the reef over build and the habitat provided by converting the lock block retaining wall to a sheet pile wall. Monitoring for Phase 1 will occur during the 1, 3 and 5 year following the construction of these features.

2) The second phase being the monitoring of the restoration of the site to the conditions which existed prior to the construction of the barge facility. This monitoring shall be reported in the 1, 3 and 5 year following restoration of the site.

b. Both phases of the Compensation Monitoring Program shall include the following measures:

1) An annual assessment of the physical stability of the compensation fish habitat using suitable methods such as site inspection, photography and ground elevation surveys, as required.

2) An annual inventory and assessment of the presence, establishment, growth and development of flora and fauna making use of the fish habitat compensation. Methods of assessment may include ground cover measurements, growth parameters and comparison to similar adjacent habitat. The assessments shall include quantitative and qualitative surveys and assessments.

3) Identification of remedial works which could be implemented to enable the fish habitat compensation to function as intended (i.e., similar to a reference site, acceptable to DFO).

4) The VFPA shall identify appropriate reference sites (the "reference sites"), which are satisfactory to DFO. The reference sites shall be areas exhibiting similar habitat types to those being proposed as fish habitat compensation and are located in areas un-impacted by recent development.

5) A written annual report describing the findings of the compensation monitoring program, including as-built drawings (i.e., surveyed draws showing the works after construction), and any relevant documents and photographs. For the barge facility site, surveyed drawings showing the site prior to construction shall be submitted for the purpose of comparison to as built drawings of the restored site. The VFPA shall provide DFO, to the attention of the Chief of Environmental

Assessment and Major Projects, with an annual report by December 31st of each year habitat monitoring is required by the Compensation Monitoring Program.

6) The Compensation Monitoring Program will be conducted by a qualified biologist or other professional, and each year of monitoring shall strive to use the same method of assessment to ensure easy comparison between different years of the monitoring program.

64. The Compensation Monitoring Program can be combined with the annual comprehensive habitat compensation effectiveness monitoring reports, which are being submitted for the Deltaport Third Berth Expansion Project (i.e., DFO Authorization 02-HPAC-PA1-000-000144).

Contingency Plan for Failure of the Fish Habitat Compensation

65. If ongoing monitoring identifies any elements of the fish habitat compensation that are not functioning as intended, the VFPA is responsible for completing any appropriate remedial works to ensure the fish habitat compensation is stable and functioning as intended.

Determining Success of the Fish Habitat Compensation

66. The fish habitat compensation will be deemed to be functioning as intended if, in the opinion of DFO, the habitats are physically stable and the productivity and growth of marine organisms associated with these habitats are similar in nature to, and exhibit the same or better growth characteristics and the same or greater abundance as, the marine organisms at the reference sites.

67. Following the initial monitoring periods identified for each phase of the project above, and any extensions thereof, DFO will assess the success of the fish habitat compensation and determine whether or not they are functioning as intended, and choose the appropriate course of action as outlined below:

a) the fish habitat compensation is functioning as intended and will be self-sustaining without further remedial work. The Fish Habitat Compensation Monitoring Program will be terminated;

b) the fish habitat compensation is not functioning as intended. The VFPA shall extend the Fish Habitat Compensation Monitoring Program, including remedial work, for an additional two years to allow more time for the habitat to become adequately established; or

c) the fish habitat compensation is not functioning as intended and further remedial work is not likely to rectify the situation. The VFPA shall work with DFO to identify and then carry out alternative compensation works to ensure no net loss in the productive capacity of fish habitat is achieved for the Project.

Protection of the Compensation Fish Habitat

68. All fish habitat compensation associated with the Project shall be considered to be fish habitat pursuant to section 35 of the *Fisheries Act*. The VFPA shall not carry on any work or undertaking that will adversely disturb or impact this habitat, and will take all reasonable steps to ensure that the habitats are not disturbed by others. The only exception to this condition shall be those specifically stated in this Authorization (i.e., the habitat losses associated with the removal of the barge facility).

Remedial Works

69. If at any time the VFPA becomes aware that any portion of the fish habitat compensation is not functioning as intended, for example due to erosion, debris accumulation, etc., the VFPA shall, in consultation with DFO, carry out any works which are deemed necessary to enable the fish habitat compensation to function, as intended.

Conditions that Relate to Financial Security

70. The VFPA provided DFO with a Letter of Credit in the sum of $ 1.4 million dollars to act as a performance bond for the obligations of the VFPA with respect to the habitat compensation monitoring requirements described in DFO Authorization (02-HPAC-PA1-000-000144). By signing this authorization the VFPA hereby agrees that the aforementioned Letter of Credit may be drawn on by DFO and the proceeds applied towards ensuring this Project achieves no net loss in the productive capacity of fish habitat, should the VFPA fail to meet its obligations agreed to in this Authorization.

71. DFO retains sole discretion as to whether or not it shall draw from the Letter of Credit.

72. All other conditions pertaining to the Letter of Credit shall remain as described in DFO Authorization 02-HPAC-PA1-000-000144.

Independent Monitoring and Auditing of the Authorization

73. Compliance with the conditions of this authorization shall be audited as part of or in addition to the auditing which is occurring as a requirement under DFO authorization (02-HPAC-PA1-000-000144).

Authorization:

The holder of this Authorization is hereby authorized under the authority of Section 35(2) of the *Fisheries Act*, R.S.C., 1985, c.F.14, to carry out the work or undertaking described herein.

This Authorization is valid only with respect to fish habitat and for no other purposes. It does not purport to release the applicant from any obligation to obtain permission from or to comply with the requirements of any other regulatory agencies.

Failure to comply with any condition of this Authorization may result in charges under the *Fisheries Act*.

This Authorization form should be held on site and work crews should be made familiar with its conditions.

Date of issuance: Dec 8/03

Approved by: _____
Chief

Title: Chief, Environmental Assessment Major Projects
Oceans, Habitat and Enhancement Branch

Fisheries and Oceans Canada

VFPA acknowledges that Fisheries and Oceans Canada has consulted with it regarding the terms of this Authorization, and confirms that it has reviewed and understands the terms of this Authorization, and agrees to the terms contained therein.

Executed by an authorized signatory of the VFPA on the 4 th day of DEC, 2003, in the presence of:

_____ Witness (signature)	)	Per: _____ Authorized signatory
Jurgen Bruemann Name (print)	)	DARRELL DESROCHERS Name (print)
Manager, Env. Programs Title	)	Director, Environmental Programs Title

ATTACHMENT 3: Roberts Bank East Causeway Habitat Compensation drawings

ROBERTS BANK

EAST CAUSEWAY HABITAT COMPENSATION

2009

DRAWING LIST

EAST CAUSEWAY GENERAL (100 SERIES)

34–291–	150	COVER SHEET
	151	GENERAL NOTES AND DESIGN CRITERIA

EAST CAUSEWAY ENVIRONMENTAL HABITAT COMPENSATION (500 SERIES)

34–291–	541	PLAN – STA. 0+000 TO STA. 0+650, SHEET 1
	542	PLAN – STA. 0+650 TO STA. 1+355, SHEET 2
	543	PLAN – STA. 1+355 TO STA. 2+055, SHEET 3
	544	PLAN – STA. 2+055 TO STA. 2+580, SHEET 4
	545	SECTIONS, SHEET 1
	546	SECTIONS, SHEET 2
	547	SECTIONS, SHEET 3
	548	SECTIONS, SHEET 4
	549	SECTIONS, SHEET 5
	550	DETAILS, SHEET 1
	551	SHEET PILE WALL AND COPE BEAM LAYOUT PLAN
	552	COPE BEAM REINFORCING DETAILS
	561	LANDSCAPE PLAN, SHEET 1
	562	LANDSCAPE PLAN, SHEET 2
	563	LANDSCAPE PLAN, SHEET 3
	564	LANDSCAPE PLAN, SHEET 4
	565	LANDSCAPE SECTIONS + DETAILS, SHEET 1
	566	LANDSCAPE SECTIONS + DETAILS, SHEET 2

REFERENCE DRAWINGS

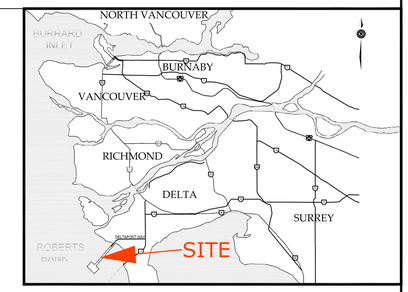

LOCATION PLAN

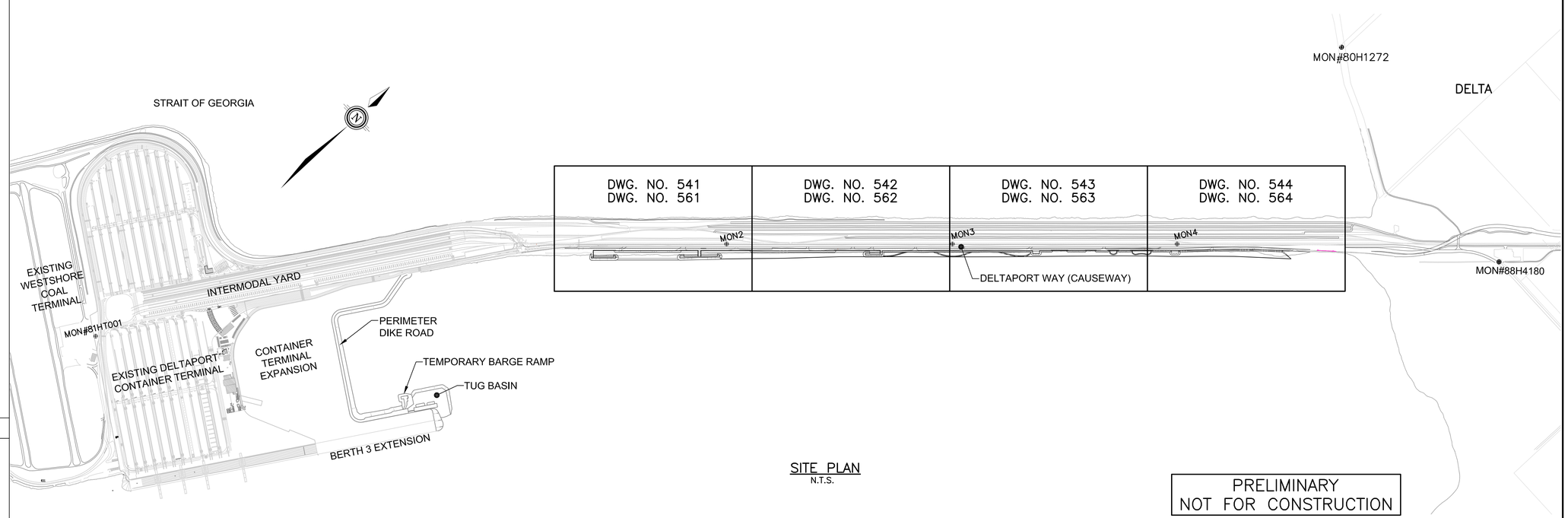

SITE PLAN
N.T.S.

PRELIMINARY
NOT FOR CONSTRUCTION

Ref.No.	REFERENCE

KLOHN CRIPPEN

IN ASSOCIATION WITH:

MOFFATT & NICHOL

GL Williams & Associates Ltd.

SHARP & DIAMOND Landscape Architecture Inc

No.	Date	REVISION	Dr'n	Ch'd
P1	APR. 7/09	ISSUED FOR TENDER	J.L.	H.W.

VFPA

VANCOUVER FRASER PORT AUTHORITY
ENGINEERING DEPARTMENT

DESIGN BY	M.C. (MN)
DRAWN BY	R.C. (MN)
APPROVED	H.W. (MN)
DATE	AUG 17, 2007
SCALE	NTS
VPA SITE	

ROBERTS BANK
EAST CAUSEWAY HABITAT COMPENSATION
COVER SHEET

SIZE	DWG.	SHEET	REV.
D	34–291–150	1 of 2	P1

TITLE BLOCK: DL-TB.dwg

DATE: 2009/04/03 – 11:51am
PATH: P:\5610 Deltaport Berth 3 Marine Works\CADD\Submittals\Issued drawings\2009-04-07_EAST CAUSEWAY_(FT)\34-291-150.dwg

DESIGN CRITERIA

1.0 DESIGN STANDARDS

1.1 RIP RAP AND SLOPE PROTECTION HAVE BEEN DESIGNED IN ACCORDANCE WITH THE PRINCIPLES OUTLINED IN THE "COASTAL ENGINEERING MANUAL" US ARMY CORPS OF ENGINEERS, 2002.

1.2 STEEL SHEET PILE WALL HAS BEEN DESIGNED IN ACCORDANCE WITH THE FOLLOWING STANDARDS:
- AASHTO STANDARD SPECIFICATIONS FOR HIGHWAY BRIDGES 1996.
- CAN/CSA–S6–06 CANADIAN HIGHWAY BRIDGE DESIGN CODE.

2.0 WATER LEVELS AND DATUM

2.1 TIDE AND PROJECT ELEVATIONS ARE IN METERS AND REFERENCED TO TIDE AND CHART DATUM. ALL ELEVATIONS SHALL BE GIVEN RELATIVE TO THIS DATUM: EL. 0.0m CHART = EL. –2.975m GEODETIC. THE REFERENCE BENCHMARK IS THE DEEP–SEATED MONUMENT 81HT001 (LOCATED INSIDE THE WESTSHORE LEASE BOUNDARY) ELEV. 6.411 m.

2.4 TIDE LEVELS ARE AS FOLLOWS:

TIDAL STATE	TIDAL ELEVATION
EXTREME HIGH WATER (ESTIMATED)	EL. +5.4m
HIGHER HIGH WATER (LARGE TIDE)	H.H.W. EL. +4.8m
HIGH WATER (MEAN TIDE)	H.W. EL. +4.1m
MEAN WATER	M.W. EL. +3.0m
LOW WATER (MEAN TIDE)	L.W. EL. +1.1m
LOWER LOW WATER (LARGE TIDE)	L.L.W. EL. +0.1m
EXTREME LOW WATER (ESTIMATED)	EL. –0.4m

3.0 WAVES

3.1 THE FOLLOWING DESIGN WAVE CONDITIONS HAVE BEEN USED IN DETERMINING WAVE FORCES ON SLOPE PROTECTION:

	DESIGN WAVE HEIGHT (m) RETURN PERIOD: 1 IN 50 YEAR		DESIGN WAVE PERIOD, T (SEC)
	EAST CAUSEWAY SOUTHERN PORTION 0+080 TO 0+660	EAST CAUSEWAY NORTHERN PORTION 0+660 TO 2+580	
Hs	0.99	1.20	5.43
$H_{10\%}$	1.26	1.33 (BREAKING)	

4.0 DESIGN VEHICLE LOADS

4.1 THE SHEET PILE WALL IS DESIGNED TO CARRY AXLE LOADS IMPOSED BY THE WORST OF THE FOLLOWING:

CL–625 TRUCK (GROSS LOAD, 625 kN)	
1ST AXLE:	50 kN
2ND AXLE:	125 kN
3RD AXLE:	125 kN
4TH AXLE (IF APPLICABLE):	175 kN
5TH AXLE (IF APPLICABLE):	150 kN

UNIFORM LIVE SURCHARGE: 16kPa

THE LOCATION OF THE NEAREST WHEEL OF THE DESIGN VEHICLE IS DESIGNED TO BE NOT CLOSER THAN 0.6m FROM THE CENTERLINE OF THE TOP OF THE WALL. THE CONTRACTOR IS RESPONSIBLE FOR ALL TEMPORARY LOAD CONDITIONS DURING CONSTRUCTION, INCLUDING CONSTRUCTION VEHICLE AND STORAGE LOADS AFFECTING THE STEEL SHEET PILE WALL.

5.0 GEOTECHNICAL CONDITIONS

5.1 FOR GEOTECHNICAL INVESTIGATIONS, SEE MARINE & EARTH GEOSCIENCES "SUMMARY OF TEST PIT OBSERVATIONS ALONG EAST CAUSEWAY" REPORT DATED JUNE 19, 2007, AND KLOHN CRIPPEN CONSULTANTS LTD. "HABITAT COMPENSATION GEOTECHNICAL INVESTIGATION" REPORT DATED FEB. 28/2007.

5.2 IN–SITU SOIL PARAMETERS FOR SHEET PILE WALL DESIGN ARE AS FOLLOWS:

INTERNAL ANGLE OF FRICTION, ϕ	32.0°
WALL/SOIL FRICTION ANGLE, δ	± 23.6°
SATURATED SOIL DENSITY, γ_{Sat}	19.0 kN/m³
MOIST SOIL DENSITY, γ_{Moist}	17.5 kN/m³

6.0 SEISMIC LOADS

6.1 LOADING BASED ON SITE SPECIFIC PEAK HORIZONTAL GROUND ACCELERATIONS OBTAINED FROM THE PACIFIC GEOSCIENCE CENTRE, AND ADJUSTED FOR SITE SPECIFIC SOIL CONDITIONS, AS FOLLOWS:

OPERATING LEVEL EARTHQUAKE (OLE) – A100 EVENT	
PROBABILITY OF EXCEEDANCE IN 50 YEARS	40%
DESIGN PEAK GROUND SURFACE ACCELERATION	0.16g
HORIZONTAL SEISMIC COEFFICIENT FOR SPW DESIGN	0.08g
VERTICAL SEISMIC COEFFICIENT FOR SPW DESIGN	0.04g

GENERAL NOTES

1.0 GENERAL

1.1 THE NOTES AND SPECIFICATIONS GIVEN ON THE PROJECT DRAWINGS ARE EXCERPTS FROM THE RELATED SECTIONS OF THE PROJECT SPECIFICATIONS. THEY DO NOT REPLACE THE PROJECT SPECIFICATIONS.

1.2 THE DELTAPORT BERTH 3 ENVIRONMENTAL AUTHORIZATION APPLIES TO THE EAST CAUSEWAY HABITAT COMPENSATION WORKS. THE SITE LIMITS ARE MARKED ON THE DRAWINGS. THE CONTRACTOR SHALL ADHERE TO ALL CONDITIONS SET FORTH IN THE AUTHORIZATION, WHICH INCLUDES ALL WORK IN THE TIDAL ZONE TO BE DONE IN THE DRY, DURING PERIODS OF LOW WATER, OR IN ISOLATION OF TIDAL WATERS TO THE SATISFACTION OF FISHERIES AND OCEANS CANADA. UNDER NO CIRCUMSTANCES SHALL THE CONTRACTOR ALLOW ANY PERSONNEL, MATERIALS OR EQUIPMENT TO ENCROACH ON THE EXISTING MUDFLATS EAST OF THE CAUSEWAY SITE.

1.3 THE CONTRACTOR'S ATTENTION IS DIRECTED TO THE GENERAL CONDITIONS OF THE SPECIFICATIONS. PARTICULARLY IN REGARD TO HIS RESPONSIBILITY TO COOPERATE WITH THE OPERATORS OF ADJACENT FACILITIES TO FACILITATE THEIR GENERAL TERMINAL OPERATIONS.

1.4 ALL DIMENSIONS ARE GIVEN IN MILLIMETERS. ELEVATIONS AND CONTOURS ARE GIVEN IN METERS AND DECIMALS THEREOF. CONTROL STATIONS ARE SHOWN IN METERS AS 0+000. SCALE INDICATED ON THE DRAWINGS IS APPROPRIATE FOR USE AT FULL SIZE (22" X 34") D PLOT.

1.5 MATERIALS AND TESTING HAVE BEEN SPECIFIED TO CONFORM TO THE CURRENT EDITIONS OF RELEVANT STANDARDS PUBLISHED BY THE FOLLOWING ORGANIZATIONS:
- CANADIAN STANDARDS ASSOCIATION (CSA)
- AMERICAN SOCIETY OF TESTING AND MATERIALS (ASTM)

1.6 LOCATIONS AND ELEVATIONS OF EXISTING ELEMENTS AS SHOWN ON THE DRAWINGS ARE APPROXIMATE VALUES ONLY. THE CONTRACTOR SHALL VISIT THE SITE OF THE WORK, TAKE HIS OWN MEASUREMENTS OF ALL EXISTING STRUCTURES, GROUND AND OTHER WORK. ALL DIMENSIONS AND DETAILS SHALL BE VERIFIED BY THE CONTRACTOR PRIOR TO FABRICATION AND CONSTRUCTION, DISCREPANCIES SHALL BE BROUGHT TO THE ATTENTION OF THE ENGINEER. THE CONTRACTOR SHALL PAY SPECIAL ATTENTION TO PRECISELY LOCATE THE EXISTING FIBRE OPTIC / COMM. LINE LOCATED ALONG THE SHOULDER OF THE CAUSEWAY ROAD (DELTAPORT WAY) ROAD PRIOR TO EXCAVATION.

1.7 EXISTING UTILITY INFORMATION WAS DERIVED FROM VFPA DRAWING 'ROBERTS BANK CAUSEWAY BASEPLAN WITH UTILITIES' (DWG. No. BP), VFPA DRAWING 'DELTAPORT INTERMODAL YARD SITE SERVICES PLAN' (DWG. No. 34–272–S03), AND VFPA DRAWING FILE 'ROBERTS BANK 2000 LINE MAPPING'.

1.8 THE CONTRACTOR SHALL PERFORM THE WORK IN FULL COMPLIANCE WITH ALL APPLICABLE WORK SAFETY LAWS, REGULATIONS AND CODES (OHS, WBC). IN PARTICULAR, THE CONTRACTOR SHALL PREPARE A TRAFFIC MANAGEMENT PLAN TO ADDRESS TRAFFIC CONTROL AND SAFETY MEASURES BASED ON THE 'MOT TRAFFIC CONTROL MANUAL FOR WORK ON ROADWAYS', LATEST EDITION. SAFETY MEASURES SHALL INCLUDE, AS A MINIMUM, WARNING SIGNS AND REFLECTIVE CONES, MARKERS, BARRIERS/BARRICADES TO SEPARATE MOTORISTS FROM THE WORK AREA AND FLAG PERSONS DURING ALL OPERATIONS ALONG THE CAUSEWAY.

1.9 THE CONTRACTOR SHALL SUBMIT PRIOR TO COMMENCING WORK A CONSTRUCTION METHOD STATEMENT DESCRIBING THE CRITICAL ACTIVITIES, INTERACTION WITH THE BERTH 3 WORKS AND TERMINAL FINISHING WORKS CONSTRUCTION AND CONFIRMING A CLEAR UNDERSTANDING OF THE PROJECT CONSTRAINTS. THE CONSTRUCTION METHOD STATEMENT SHALL INCLUDE A SKETCH IDENTIFYING THE PROPOSED LOCATION OF THE CONTRACTOR AND ENGINEER SITE OFFICES, MATERIAL LAYDOWN AREAS AND ANY MATERIAL STOCKPILE AREAS, AS WELL AS CONFIRM THE LOCATION OF THE OFF–SITE DISPOSAL SITE. THE METHOD STATEMENT SHALL CONFIRM THE DELIVERY METHODS AND SCHEDULES FOR THE DIFFERENT IMPORTED ROCK AND PLANT MATERIALS AND STEEL SHEET PILE WALL CONSTRUCTION METHODOLOGY AND SEQUENCE.

2.0 SURVEY INFORMATION

2.1 TOPOGRAPHIC SURVEY, INCLUDING FORESHORE CONTOURS AND CONTROL MONUMENT REFERENCES, IS PROVIDED BY TARGET LAND SURVEYING (FORMERLY MPT LAND SURVEYING) REF. FILE: 4562–SECTION–GPS (SEPT 28, 2005).

ELEVATIONS ARE DERIVED FROM DEEP SEATED CONTROL MONUMENT 81HT001. THE UTM (NAD 83) COORDINATES AND CHART DATUM ELEVATION OF MON. 81HT001 AND OTHER REFERENCE MONUMENTS ARE PROIVDED IN THE FOLLOWING TABLE:

MONUMENT	NORTHING (m)	EASTING (m)	ELEVATION (m)
88HT001	5429549.647	488207.802	6.411
88H4180	5433347.988	491391.901	5.109
80H1272	5433458.085	490459.368	6.217

GROUND LEVEL DIST. = (UTM GRID DIST.) / (0.9996037)
CHART DATUM = (GEODETIC ELEVATION) + (2.975m)

2.2 ADDITIONAL CONTROL POINTS ARE PROIVDED ALONG THE EAST CAUSEWAY FOR REFERENCE (VFPA SKETCH PLAN S2007–105, APRIL 13, 2007). THE UTM (NAD83) COORDINATES ARE PROVIDED IN THE FOLLOWING TABLE:

REFERENCE	NORTHING (m)	EASTING (m)
MON2	5431398.696	489487.607
MON3	5432981.119	490030.817
MON4	5432560.755	490571.325

GROUND LEVEL DIST. = (UTM GRID DIST.) / (0.999592478)

2.3 THE CONTRACTOR SHALL COORDINATE THE SURVEY LAYOUT WITH THE ENGINEER PRIOR TO CONSTRUCTION. FINAL DIMENSIONS AND COORDINATES ARE SUBJECT TO SURVEY.

3.0 SITE ACCESS

3.1 SITE ACCESS IS GENERALLY FROM DELTA ALONG DELTAPORT WAY (CAUSEWAY). THE CONTRACTOR SHALL PROVIDE ADEQUATE FLAG PERSONS AND/OR TRAFFIC SIGNAL DEVICES TO PREVENT INTERFERENCE WITH DELTAPORT AND WESTSHORE TERMINAL TRAFFIC, INCLUDING INBOUND/OUTBOUND CONTAINER TRUCKS, PORT SECURITY, EMERGENCY, DELIVERIES AND OTHER VEHICLES. PRIORITY SHALL BE GIVEN TO ALL OTHER TRAFFIC OVER THE CONTRACTOR'S CONSTRUCTION TRAFFIC.

3.2 MATERIAL DELIVERY FOR THE SLOPE PROTECTION (RIP RAP AND FILTER STONE) AND CORE ROCK SHALL BE BY MEANS OF WATERBORNE TRANSPORT VIA. THE TEMPORARY BARGE RAMP FACILITY AT THE TUG BASIN, ALONG THE PERIMETER DIKE ROAD AND ALONG THE SOUTHERN PORTIONS OF THE CAUSEWAY TO THE WORK. THE SAME CONDITIONS FOR THE CAUSEWAY APPLY ALSO TO THE PERIMETER DIKE ROAD. REFER TO THE GENERAL CONDITIONS FOR THE TEMPORARY BARGE RAMP CONDITIONS OF USE.

3.3 THE CONTRACTOR SHALL KEEP THE CAUSEWAY ROADWAY (DELTAPORT WAY) AND PERIMETER DIKE ROAD CLEAR OF ALL DEBRIS AND MUD ARISING FROM HIS IMPORT/EXPORT TRUCKS AND CONSTRUCTION METHODS, AND SHALL REPAIR ANY DAMAGE MADE BY HIS FORCES TO THE ROADWAY SURFACE, BARRIERS, SPEED BUMPS, ETC.

3.4 NO LANE CLOSURES WILL BE PERMITTED ALONG ANY PORTION OF THE CAUSEWAY OR PERIMETER DIKE ROAD.

4.0 EXCAVATION AND DISPOSAL

4.1 EXCAVATE AND DISPOSE THE EXISTING EAST CAUSEWAY FORESHORE SLOPE MATERIALS TO THE NEAT LINE EXCAVATION LIMIT TO ACHIEVE THE FINISHED SLOPES AND PROFILES AS SHOWN ON THE DRAWINGS, UNLESS NOTED OTHERWISE.

4.2 REMOVE AND DISPOSE ALL EXISTING SLOPE PROTECTION (RIP–RAP AND FILTER STONE) AND FORESHORE SLOPE MATERIALS. THE CONTRACTOR MAY SALVAGE A PORTION OF THE EXISTING SLOPE PROTECTION MATERIALS FOR RE–USE. REFER TO SPECIFICATION SECTION 35 37 10 (SLOPE PROTECTION) AND SECTION 35 38 20 (SURFACE AGGREGATES) FOR SALVAGE REQUIREMENTS.

4.3 REMOVE AND DISPOSE ALL MISCELLANEOUS ITEMS INCLUDING VEGETATION, SHRUBS, GRASSES, TIMBER, LOGS, WOODY DEBRIS AND MISCELLANEOUS TRASH PILES WITHIN THE CONTRACT LIMITS. THESE MISCELLANEOUS ITEMS ARE NOT SHOWN ON THE DRAWINGS AND THUS THE CONTRACTOR SHALL VISIT THE SITE DURING THE TENDER PERIOD TO FAMILIARIZE HIMSELF WITH THESE MISCELLANEOUS ITEMS.

4.4 DISPOSE OF ALL EXCAVATED AND REMOVED MATERIALS OFF–SITE IN AN ENVIRONMENTALLY ACCEPTABLE MANNER IN ACCORDANCE WITH SPECIFICATION 31 32 10 (EXCAVATING).

5.0 SLOPE PROTECTION (RIP RAP AND FILTER STONE) AND CORE ROCK

5.1 SLOPE PROTECTION (RIP RAP AND FILTER STONE) AND CORE ROCK SHALL BE IMPORTED CLEAN, ROUGH ANGULAR QUARRIED STONE OF A DENSE, HARD, DURABLE CHARACTER, FREE OF ORGANIC MATERIAL, IN–FILLED JOINTS, SEAMS, OR OTHER DEFECTS, RESISTANT TO BREAKDOWN BY HANDLING OR WEATHERING OR EXPOSED TO SEA WATER THAT MEETS THE TEST REQUIREMENTS PROVIDED IN THE SPECIFICATIONS, UNLESS NOTED OTHERWISE.

5.2 EXISTING SLOPE PROTECTION STONE ALONG THE EAST CAUSEWAY FORESHORE WITHIN THE CONTRACT LIMITS MAY BE SALVAGED AND RE–USED AS RIP RAP, SUBJECT TO THE STONE MEETING THE SPECIFIED GRADATION LIMITS AND OTHER REQUIREMENTS AS SET FORTH IN THE SPECIFICATIONS.

5.3 REFER TO THE APPLICABLE SPECIFICATIONS FOR THE SPECIFIC GRADATION REQUIREMENTS OF THE RIP RAP AND FILTER STONE.

6.0 SURFACE AGGREGATE (BOULDERS, COBBLE, GRAVEL AND SAND)

6.1 BOULDERS SHALL BE CLEAN, SMOOTH ROCK THAT IS DENSE, HARD, DURABLE CHARACTER, FREE OF ORGANIC MATERIAL, FREE OF SEAMS, JOINTS OR OTHER DEFECTS AND RESISTANT TO BREAKDOWN BY HANDLING OR WEATHERING OR EXPOSED TO SEA WATER. PLACE LARGE AND SMALL BOULDER CLUSTERS AS DIRECTED BY THE ENGINEER.

6.2 COBBLES, GRAVEL AND SAND SHALL BE CLEAN, GRADED, SMOOTH NATURAL STONE THAT IS DENSE, HARD, DURABLE CHARACTER, FREE OF ORGANIC MATTER AND RESISTANCE TO WEATHERING OR EXPOSED TO SEA WATER.

6.3 EXISTING SURFACE AGGREGATES ALONG THE EAST CAUSEWAY FORESHORE WITHIN THE CONTRACT LIMITS MAY BE SALVAGED AND RE–USED AS BOULDERS, COBBLES AND GRAVEL SUBJECT TO STONE MEETING THE SPECIFIED GRADATION LIMITS AND OTHER REQUIREMENTS AS SET FORTH IN THE SPECIFICATIONS.

6.4 REFER TO THE APPLICABLE SPECIFICATIONS FOR THE SPECIFIC GRADATION REQUIREMENTS OF EACH AGGREGATE TYPE.

7.0 GROWING MEDIUM (TOP SOIL) AND MARSH SOIL

7.1 GROWING MEDIUM SHALL BE TOPSOIL MIXTURE OF MINERAL PARTICULARS, MICRO ORGANISMS AND ORGANIC MATTER THAT PROVIDES SUITABLE MEDIUM FOR SUPPORTING PLANT GROWTH. GROWING MEDIUM SHALL BE FREE FROM WEED SEEDS.

7.2 MARSH SOIL SHALL BE A NATURAL (NOT MANUFACTURED) SOIL SUCH AS SILTY LOAM OR SANDY LOAM THAT PROVIDES SUITABLE MEDIUM FOR SUPPORTING PLANT GROWTH IN AN INTERTIDAL MARSH ENVIRONMENT. MARSH SOIL SHALL BE FREE FROM WEED SEEDS.

7.3 GROWING MEDIUM AND MARSH SOIL SAMPLES SHALL BE REVIEWED AND APPROVED BY THE ENGINEER PRIOR TO PLACEMENT.

7.4 REFER TO THE APPLICABLE SPECIFICATIONS FOR THE SPECIFIC MATERIAL PROPERTY REQUIREMENTS FOR EACH MATERIAL TYPE.

8.0 TREES, SHRUBS AND PLANTING

8.1 REFER TO THE LANDSCAPE DRAWINGS AND SPECIFICATIONS FOR ALL TREES, SHRUBS AND PLANTING DETAILS AND REQUIREMENTS.

8.2 OBTAIN APPROVAL FROM THE ENGINEER OF ALL PLANT MATERIAL AT SOURCE PRIOR TO SHIPPING INCLUDING THE SALT MARSH PLANT MATERIAL.

8.3 ALL PLANTING SHALL BE DONE IN ACCORDANCE WITH BC LANDSCAPE STANDARD, LATEST EDITION.

8.4 REFER TO THE PLANT LIST AS SHOWN ON THE DRAWINGS FOR A COMPLETE LIST OF PLANT MATERIAL. THE SALT MARSH PLANT MATERIAL IS COMPRISED OF A MIXTURE OF DONOR PLANT MATERIAL AND NURSERY GROWN STOCK.

8.5 SALT MARSH HARVESTING AND PLANTING SHALL BE DONE IN THE SPRING PRIOR TO SPRING FLOWERING. SUBMIT HARVESTING AND PLANTING SCHEDULE AND IDENTIFY LOCAL DONOR SITES TO THE ENGINEER FOR APPROVAL.

8.6 REFER TO THE SPECIFICATIONS FOR THE WARRANTY AND MAINTENANCE REQUIREMENTS FOR THE PLANT MATERIAL.

9.0 STEEL SHEET PILE WALL

9.1 STEEL SHEET PILE WALL SHALL BE TYPE AZ19–700 (MANUFACTURED BY ARCELOR).

9.2 MATERIAL TO CAN/CSA–G40.21 GRADE 350W OR EQUIVALENT.

9.3 PAINTING OF SHEET PILES AND ASSOCIATED CONNECTORS SHALL BE IN ACCORDANCE WITH SPECIFICATION SECTION 09 97 19 (PAINTING EXTERIOR METAL SURFACES).

10.0 CONCRETE

10.1 ALL CONCRETE SHALL HAVE A 28–DAY COMPRESSIVE STRENGTH OF 35 MPa.

10.2 ALL PORTLAND CEMENT SHALL BE TYPE MS TO CAN/CSA–A5–M, LATEST EDITION.

10.3 ALL COLD AND HOT WEATHER CONCRETE WORK SHALL CONFORM TO CAN/CSA A23.1–M, ACI 305R AND ACI 306R, LATEST EDITIONS.

11.0 CONCRETE REINFORCEMENT

11.1 ALL CONCRETE REINFORCEMENT BARS SHALL BE BILLET STEEL, GRADE 400, DEFORMED BARS CONFORMING TO CAN/CSA–G30.18, LATEST EDITION.

12.0 TRAFFIC SIGNS

12.1 P–10 EMERGENCY PARKING ONLY SIGNS AS SHOWN ON THE DRAWINGS SHALL CONFORM TO BC MOT "MANUAL OF STANDARD TRAFFIC SIGNS AND PAVEMENT MARKINGS" AND "RECOGNIZED PRODUCT LIST (LATEST EDITIONS).

12.2 INSTALL OR RELOCATE ALL SIGNS AS SHOWN ON THE DRAWINGS BEHIND THE BARRIERS AS APPROVED BY THE ENGINEER. TRAFFIC SIGN BASE SHALL CONFORM TO BC MOT "STANDARD SPECIFICATION FOR HIGHWAY CONSTRUCTION" (LATEST EDITION), SECTION 635–SIGNING AND ELECTRICAL. REFER TO SPECIFICATION DRAWING NO.SP635–1.1.35.

PRELIMINARY
NOT FOR CONSTRUCTION

Ref.No.	REFERENCE

KLOHN CRIPPEN

IN ASSOCIATION WITH:

MOFFATT & NICHOL

GL Williams & Associates Ltd.

SHARP & DIAMOND Landscape Architecture Inc

No.	Date	REVISION	Dr'n	Ch'd
P1	APR. 7/09	ISSUED FOR TENDER	J.L.	H.W.

VFPA
VANCOUVER FRASER PORT AUTHORITY
ENGINEERING DEPARTMENT

DESIGN BY	M.C. (MN)
DRAWN BY	R.C. (MN)
APPROVED	H.W. (MN)
DATE	AUG 17, 2007
SCALE	NTS
VPA SITE	

ROBERTS BANK
EAST CAUSEWAY HABITAT COMPENSATION

GENERAL NOTES & DESIGN CRITERIA

SIZE D | DWG. 34–291–151 | SHEET 2 of 2 | REV. P1

TITLE BLOCK: DL–TB.dwg

DATE: 2009/04/03 – 1:14pm
PATH: P:\5610 Deltaport Berth 3 Marine Works\CADD\Submittals\Issued drawings\2009–04–07_EAST CAUSEWAY_IFT\34–291–151.dwg

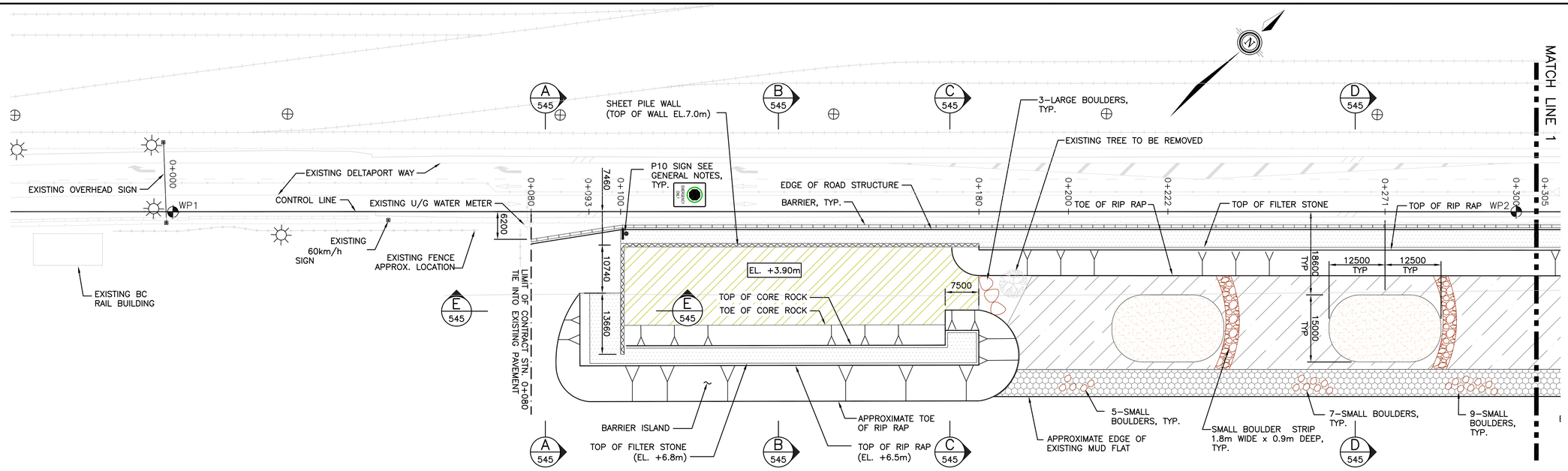

LEGEND

- COBBLE
- GRAVEL
- SAND
- MARSH SOIL
- BOULDERS
- GROWING MEDIUM
- EXISTING WATER MAIN
- EXISTING FIBRE OPTIC/COMM. LINE
- EXISTING EDGE OF PAVEMENT
- EXISTING POWER POLE
- EXISTING LIGHT POLE

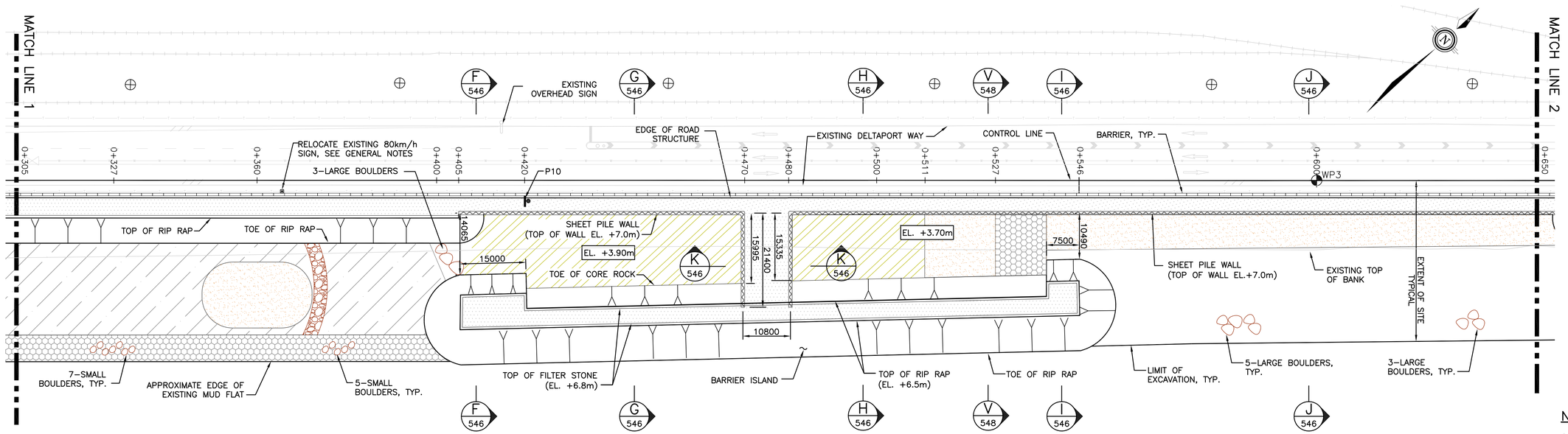

NOTES:

1. CONTROL LINE IS APPROXIMATELY LOCATED ON EXISTING SHOULDER LINE (PAINTED WHITE LINE) AND IS THE WESTERN LIMIT OF CONTRACT.

EAST CAUSEWAY WORK POINTS

POINT	NORTHING	EASTING
WP1	5430970.219	489109.448
WP2	5431189.670	489313.999
WP3	5431409.054	489518.622

PRELIMINARY
NOT FOR CONSTRUCTION

10m 0m 10m 20m
SCALE: 1: 500

Ref.No.	REFERENCE

KLOHN CRIPPEN

IN ASSOCIATION WITH:
MOFFATT & NICHOL
GL Williams & Associates Ltd.
SHARP & DIAMOND Landscape Architecture Inc

No.	Date	REVISION	Dr'n	Ch'd
P1	APR. 7/09	ISSUED FOR TENDER	J.L.	H.W.

VFPA
VANCOUVER FRASER PORT AUTHORITY
ENGINEERING DEPARTMENT

DESIGN BY	M.C. (MN)
DRAWN BY	R.C. (MN)
APPROVED	H.W. (MN)
DATE	AUG 17, 2007
SCALE	AS SHOWN
VPA SITE	

ROBERTS BANK
EAST CAUSEWAY HABITAT COMPENSATION
PLAN – STA. 0+000 TO STA. 0+650
SHEET 1

SIZE	DWG.	SHEET	REV.
D	34-291-541	1 of 12	P1

TITLE BLOCK: DL-TB.dwg
DATE: 2009/04/03 – 11:54am
PATH: P:\5610 Deltaport Berth 3 Marine Works\CADD\Submittals\Issued drawings\2009-04-07_EAST CAUSEWAY_IFT\34-291-541-544.dwg

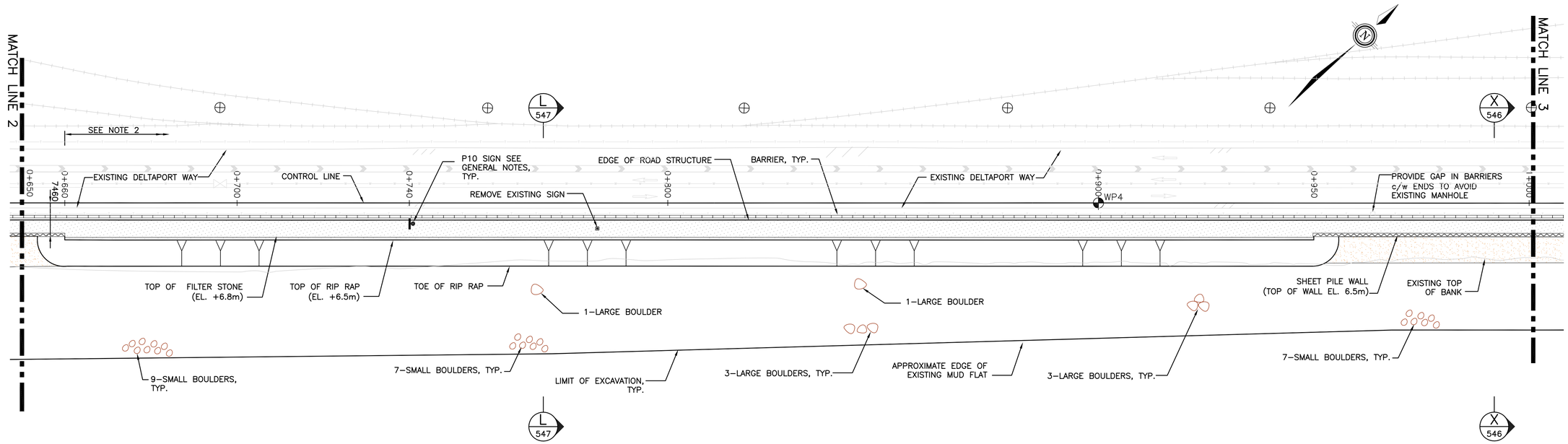

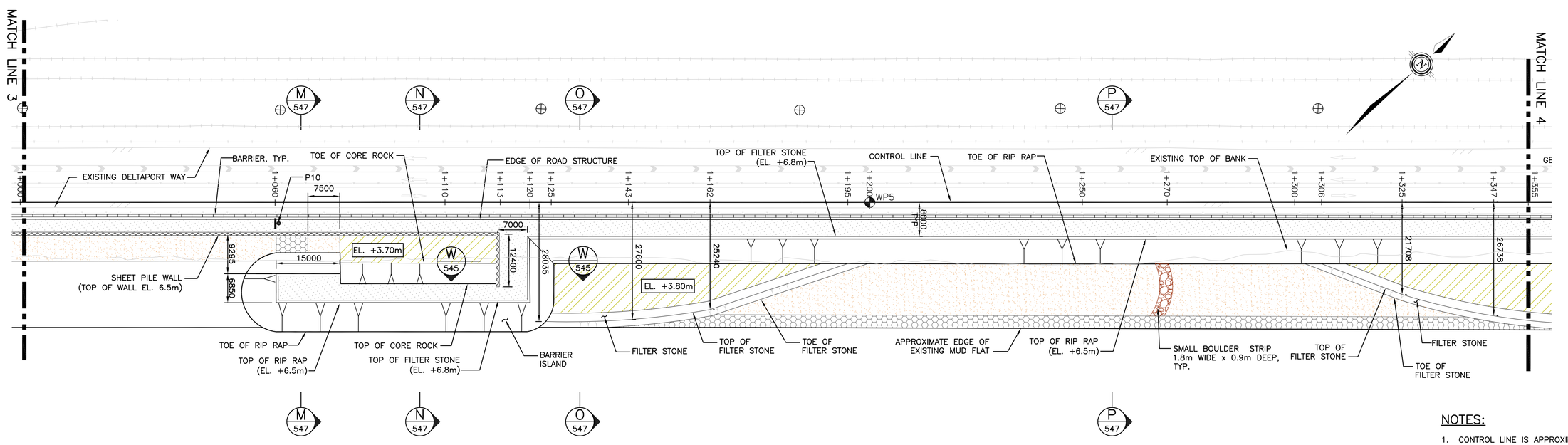

LEGEND

- COBBLE
- GRAVEL
- SAND
- MARSH SOIL
- BOULDERS
- GROWING MEDIUM
- EXISTING WATER MAIN
- EXISTING FIBRE OPTIC/COMM. LINE
- EXISTING EDGE OF PAVEMENT
- EXISTING POWER POLE
- EXISTING LIGHT POLE

NOTES:

1. CONTROL LINE IS APPROXIMATELY LOCATED ON EXISTING SHOULDER LINE (PAINTED WHITE LINE) AND IS THE WESTERN LIMIT OF CONTRACT.
2. PROVIDE DRAINAGE FOR ROAD SURFACE RUNOFF THROUGH GROWING MEDIUM, SEE DWG. 550.

EAST CAUSEWAY WORK POINTS		
POINT	NORTHING	EASTING
WP4	5431628.426	489723.259
WP5	5431847.808	489927.884

PRELIMINARY
NOT FOR CONSTRUCTION

10m 0m 10m 20m
SCALE: 1 : 500

Ref.No.	REFERENCE

KLOHN CRIPPEN

IN ASSOCIATION WITH:

MOFFATT & NICHOL

GL Williams & Associates Ltd.

SHARP & DIAMOND Landscape Architecture Inc

No.	Date	REVISION	Dr'n	Ch'd
P1	APR. 7/09	ISSUED FOR TENDER	J.L.	H.W.

VFPA
VANCOUVER FRASER PORT AUTHORITY
ENGINEERING DEPARTMENT

DESIGN BY	M.C. (MN)
DRAWN BY	R.C. (MN)
APPROVED	H.W. (MN)
DATE	AUG 17, 2007
SCALE	
VPA SITE	

ROBERTS BANK
EAST CAUSEWAY HABITAT COMPENSATION
PLAN – STA. 0+650 TO STA. 1+355
SHEET 2

SIZE	DWG.	SHEET	REV.
D	34-291-542	2 of 12	P1

TITLE BLOCK: DL-TB.dwg

DATE: 2009/04/03 – 11:56am
PATH: P:\5610 Deltaport Berth 3 Marine Works\CADD\Submittals\Issued drawings\2009-04-07_EAST CAUSEWAY_IFT\34-291-541-544.dwg

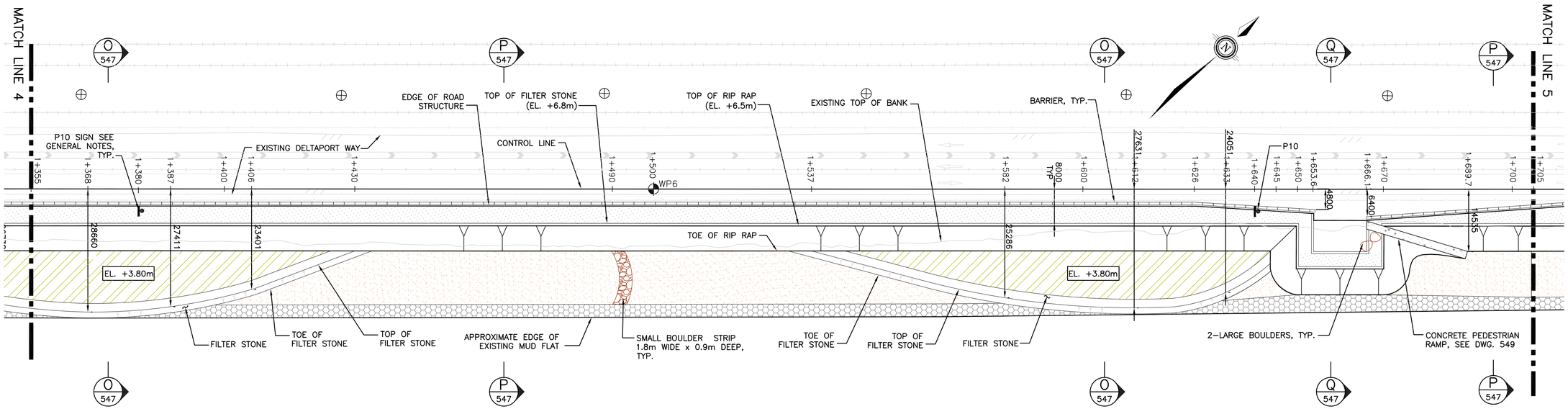

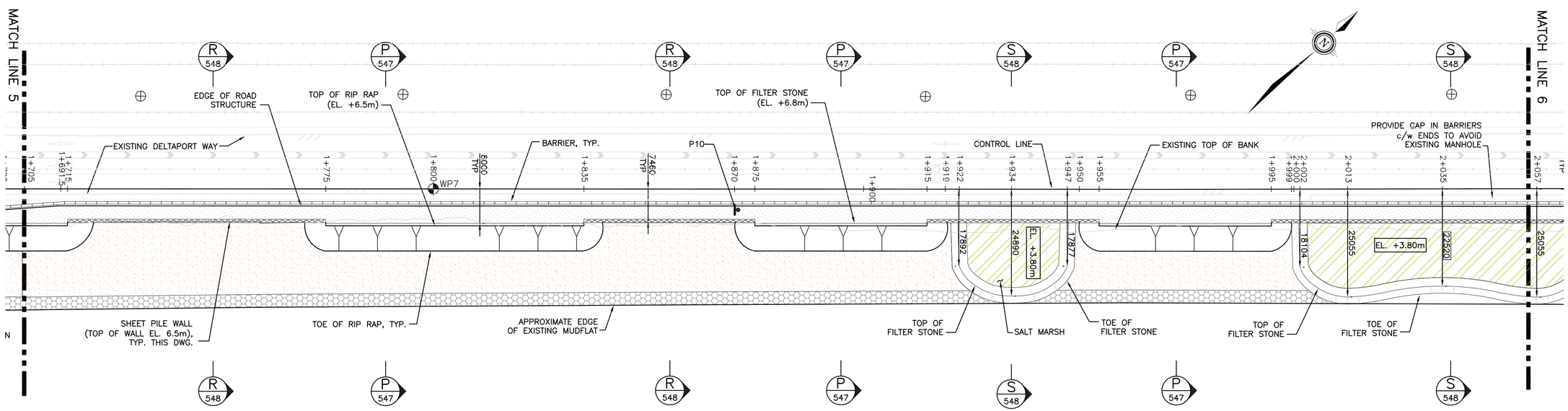

LEGEND

- COBBLE
- GRAVEL
- SAND
- MARSH SOIL
- BOULDERS
- GROWING MEDIUM
- EXISTING WATER MAIN
- EXISTING FIBRE OPTIC/COMM. LINE
- EXISTING EDGE OF PAVEMENT
- EXISTING POWER POLE
- EXISTING LIGHT POLE

EAST CAUSEWAY WORK POINTS		
POINT	NORTHING	EASTING
WP6	5432067.217	490132.481
WP7	5432286.577	490337.130

PRELIMINARY
NOT FOR CONSTRUCTION

NOTES:

1. CONTROL LINE IS APPROXIMATELY LOCATED ON EXISTING SHOULDER LINE (PAINTED WHITE LINE) AND IS THE WESTERN LIMIT OF CONTRACT.
2. PROVIDE DRAINAGE FOR ROAD SURFACE RUNOFF THROUGH GROWING MEDIUM, SEE DWG. 550.

10m 0m 10m 20m
SCALE: 1 : 500

Ref.No.	REFERENCE

KLOHN CRIPPEN
IN ASSOCIATION WITH:
MOFFATT & NICHOL
GL Williams & Associates Ltd.
SHARP & DIAMOND Landscape Architecture Inc

No.	Date	REVISION	Dr'n	Ch'd
P1	APR. 7/09	ISSUED FOR TENDER	J.L.	H.W.

VFPA
VANCOUVER FRASER PORT AUTHORITY
ENGINEERING DEPARTMENT

DESIGN BY	M.C. (MN)
DRAWN BY	R.C. (MN)
APPROVED	H.W. (MN)
DATE	AUG 17, 2007
SCALE	AS SHOWN
VPA SITE	

ROBERTS BANK
EAST CAUSEWAY HABITAT COMPENSATION
PLAN – STA. 1+355 TO STA. 2+055
SHEET 3

SIZE	DWG.	SHEET	REV.
D	34-291-543	3 of 12	P1

TITLE BLOCK: DL-TB.dwg
PATH: P:\5610 Deltaport Berth 3 Marine Works\CADD\Submittals\issued drawings\2009-04-07_EAST CAUSEWAY_(FT)\34-291-541-544.dwg
DATE: 2009/04/03 – 11:57am

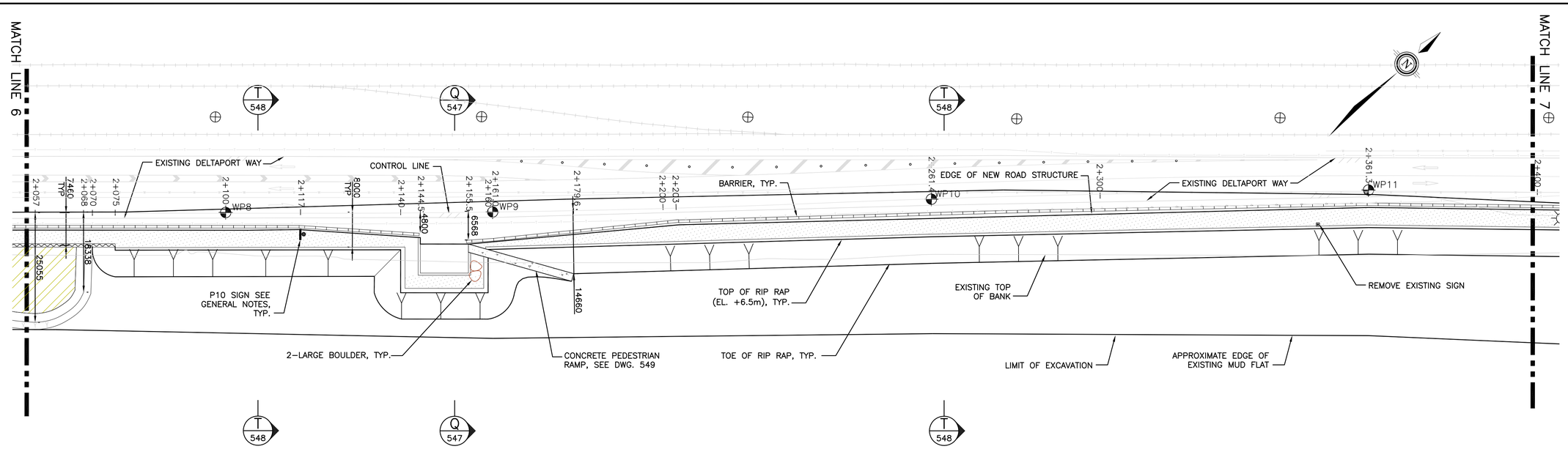

LEGEND

- COBBLE
- GRAVEL
- SAND
- MARSH SOIL
- BOULDERS
- GROWING MEDIUM
- EXISTING WATER MAIN
- EXISTING FIBRE OPTIC/COMM. LINE
- EXISTING EDGE OF PAVEMENT
- EXISTING POWER POLE
- EXISTING LIGHT POLE

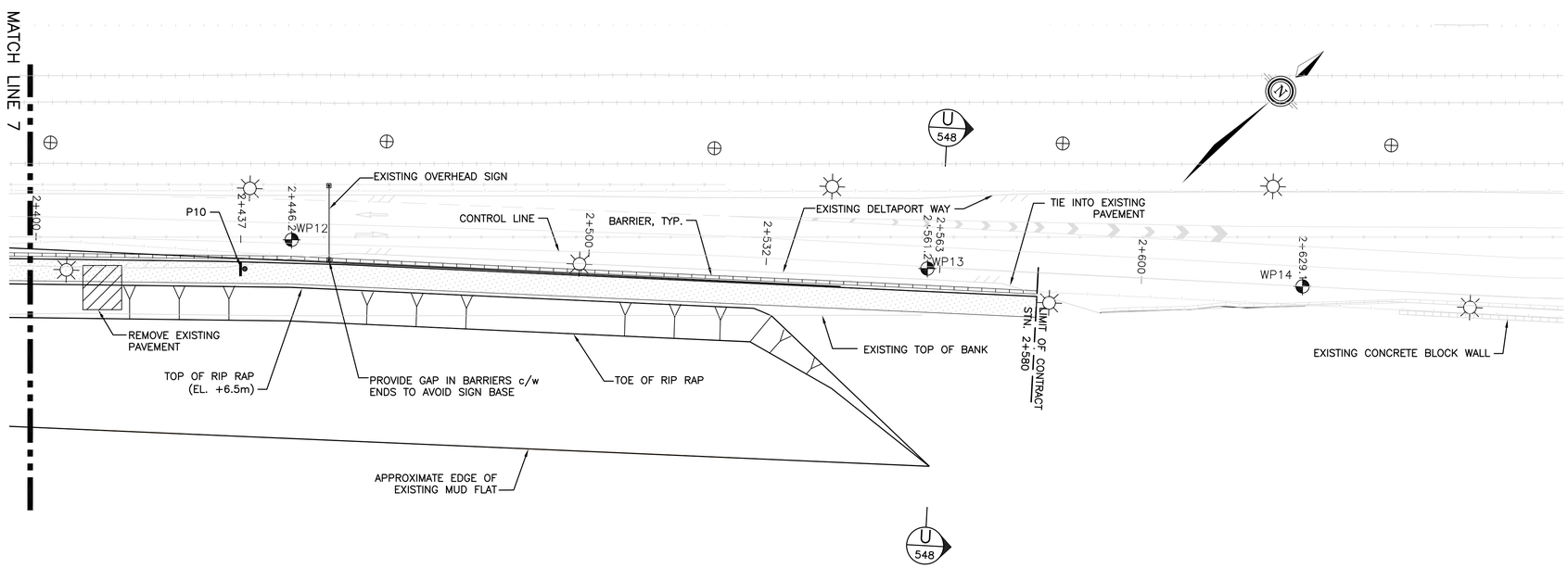

EAST CAUSEWAY WORK POINTS		
POINT	NORTHING	EASTING
WP8	5432505.965	490541.748
WP9	5432550.695	490583.291
WP10	5432626.063	490649.573
WP11	5432700.589	490716.201
WP12	5432761.902	490774.808
WP13	5432842.401	490856.988
WP14	5432889.796	490905.600

NOTES:

1. CONTROL LINE IS APPROXIMATELY LOCATED ON EXISTING SHOULDER LINE (PAINTED WHITE LINE) AND IS THE WESTERN LIMIT OF CONTRACT.
2. PROVIDE DRAINAGE FOR ROAD SURFACE RUNOFF THROUGH GROWING MEDIUM, SEE DWG. 550.

PRELIMINARY
NOT FOR CONSTRUCTION

10m 0m 10m 20m
SCALE:1 : 500

Ref.No.	REFERENCE

KLOHN CRIPPEN

IN ASSOCIATION WITH:

MOFFATT & NICHOL

GL Williams & Associates Ltd.

SHARP & DIAMOND Landscape Architecture Inc

No.	Date	REVISION	Dr'n	Ch'd
P1	APR. 7/09	ISSUED FOR TENDER	J.L.	H.W.

VFPA

VANCOUVER FRASER PORT AUTHORITY
ENGINEERING DEPARTMENT

DESIGN BY	M.C. (MN)
DRAWN BY	R.C. (MN)
APPROVED	H.W. (MN)
DATE	AUG 17, 2007
SCALE	AS SHOWN
VPA SITE	

ROBERTS BANK
EAST CAUSEWAY HABITAT COMPENSATION
PLAN – STA. 2+055 TO STA. 2+580
SHEET 4

SIZE	DWG.	SHEET	REV.
D	34-291-544	4 of 12	P1

TITLE BLOCK: DL-TB.dwg

DATE: 2009/04/03 – 11:57am
PATH: P:\5610 Deltaport Berth 3 Marine Works\CADD\Submittals\Issued drawings\2009-04-07_EAST CAUSEWAY_IFT\34-291-541-544.dwg

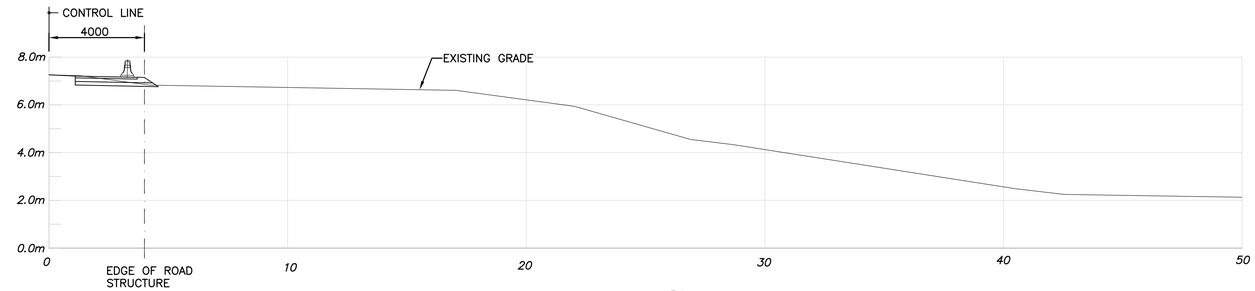

SECTION A
STN 0+083 541

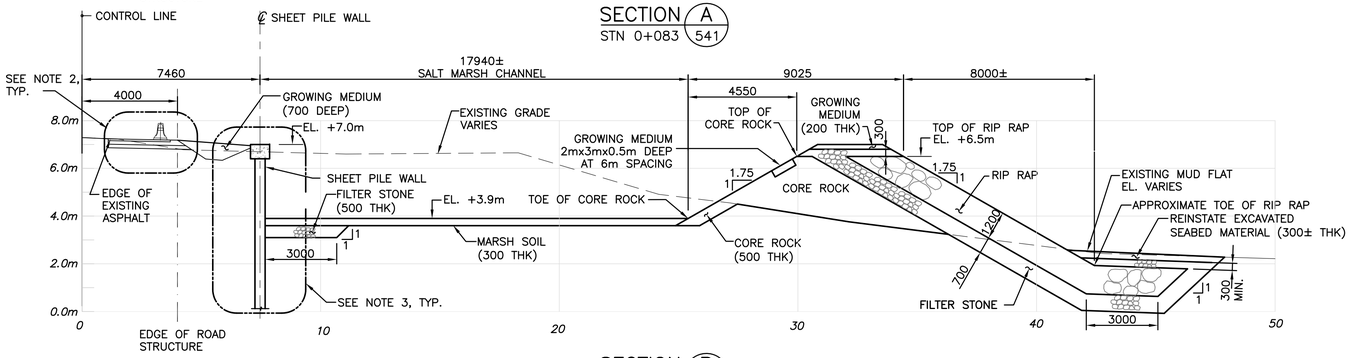

SECTION B
STN 0+100 TO 0+172.5 541

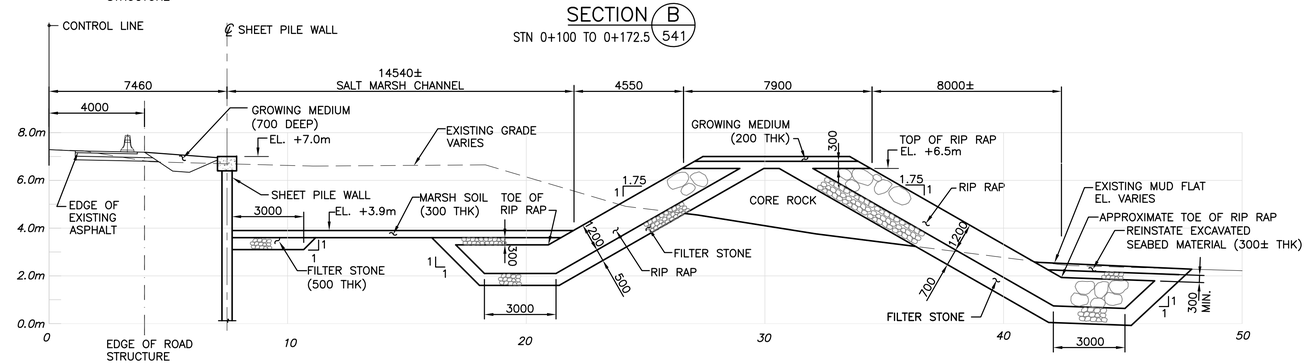

SECTION C
STN 0+172.5 TO 0+180 541

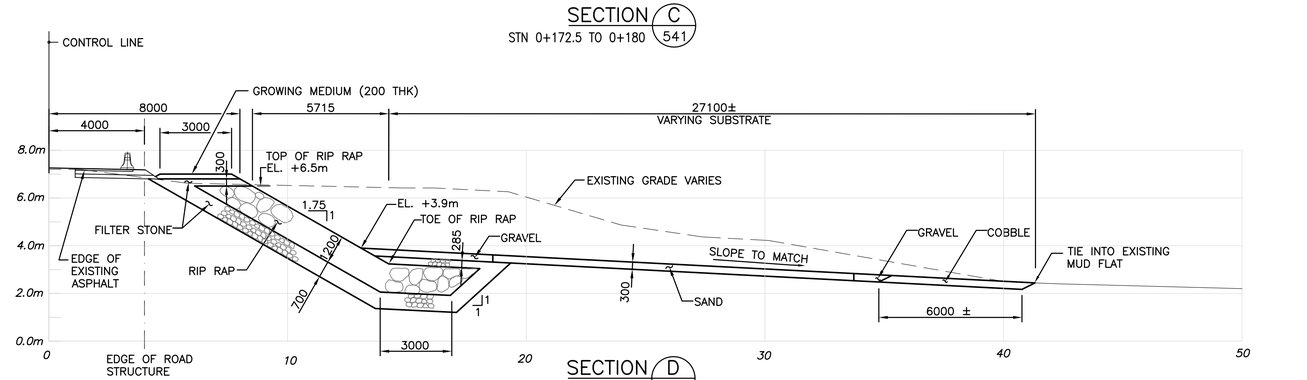

SECTION D
STN 0+180 TO 0+405 541

BARRIER ISLAND END RETURNS NOT SHOWN

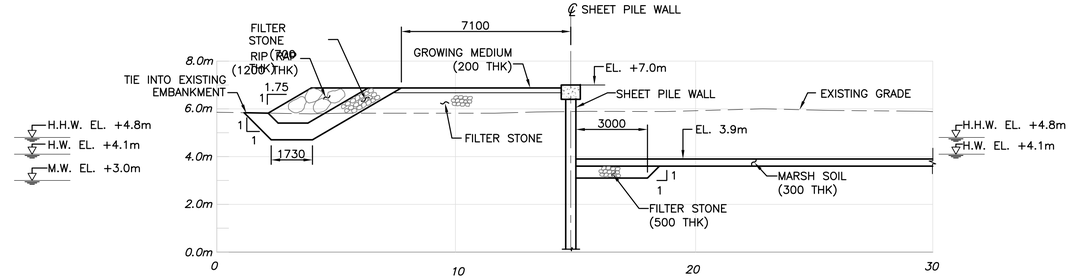

SECTION E
541

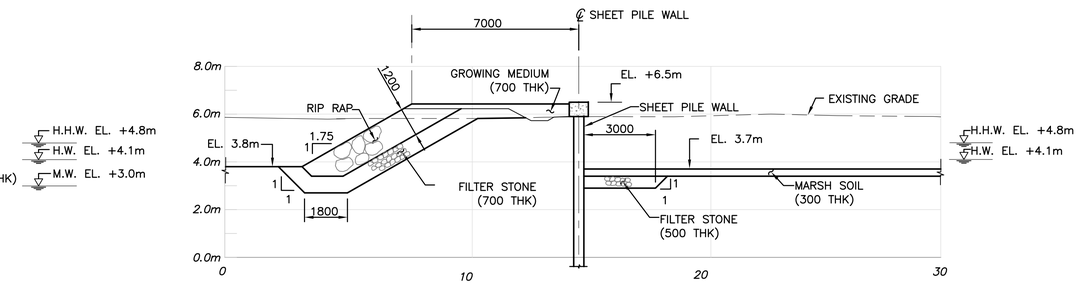

SECTION W
542

NOTES:

1. CONTROL LINE IS APPROXIMATELY LOCATED ON EXISTING SHOULDER LINE (PAINTED WHITE LINE) AND IS THE WESTERN LIMIT OF CONTRACT.
2. FOR DETAILS OF TYPICAL NEW PAVED SHOULDER ROAD STRUCTURE, SEE DWG. 549.
3. FOR DETAILS OF TYPICAL SHEET PILE WALL, SEE DWG. 550.
4. FOR DETAILS OF GROWING MEDIUM (INCLUDING FILTER FABRIC), SEE LANDSCAPE DRAWINGS 565 AND 566.

PRELIMINARY
NOT FOR CONSTRUCTION

2.5m 0m 2.5m 5m
SCALE: 1 : 125

Ref.No.	REFERENCE

KLOHN CRIPPEN

IN ASSOCIATION WITH:

MOFFATT & NICHOL

GL Williams & Associates Ltd.

SHARP & DIAMOND Landscape Architecture Inc

No.	Date	REVISION	Dr'n	Ch'd
P1	APR. 7/09	ISSUED FOR TENDER	J.L.	H.W.

VFPA

VANCOUVER FRASER PORT AUTHORITY
ENGINEERING DEPARTMENT

DESIGN BY	M.C. (MN)
DRAWN BY	R.C. (MN)
APPROVED	H.W. (MN)
DATE	AUG 17, 2007
SCALE	AS SHOWN
VPA SITE	

ROBERTS BANK
EAST CAUSEWAY HABITAT COMPENSATION
SECTIONS
SHEET 1

SIZE	DWG.	SHEET	REV.
D	34-291-545	5 of 12	P1

TITLE BLOCK: DL-TB.dwg

DATE: 2009/04/03 - 12:03pm
PATH: P:\5610 Deltaport Berth 3 Marine Works\CADD\Submittals\issued drawings\2009-04-07_EAST CAUSEWAY_LFT\34-291-545-549.dwg

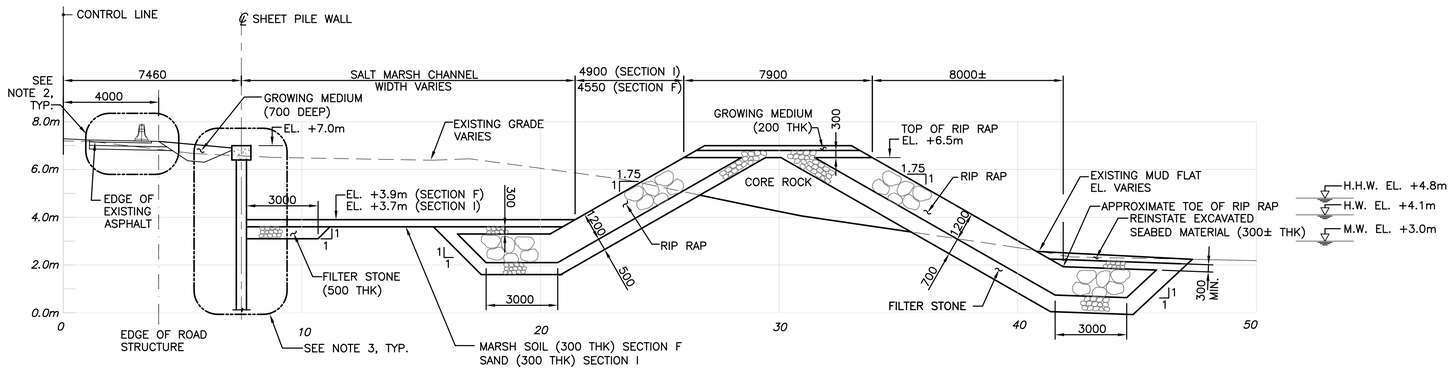

SECTION F
STN 0+405 TO 0+420 541

SECTION I
STN 0+538.5 TO 0+546 541

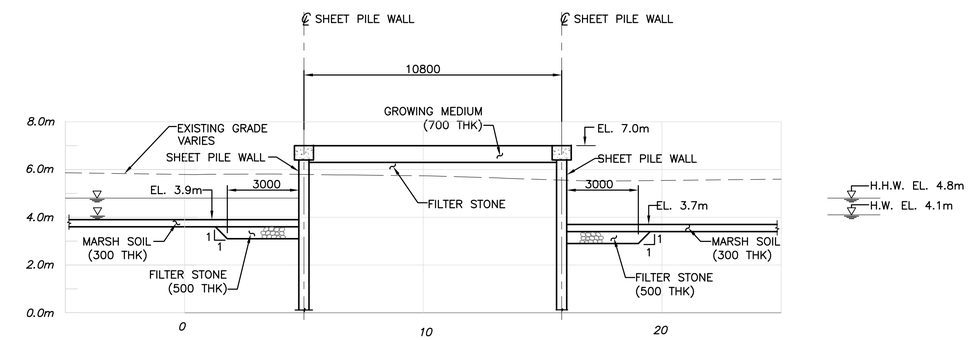

SECTION K
541

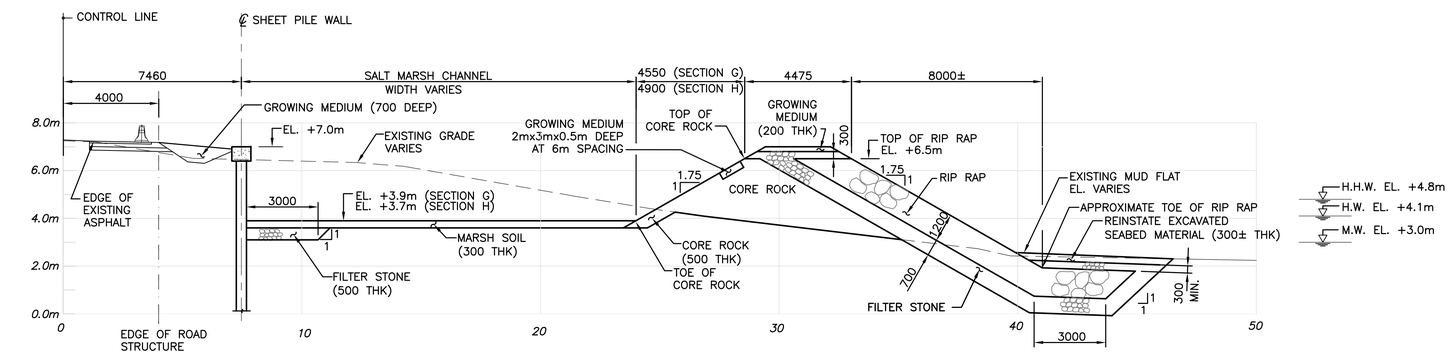

SECTION G
STN 0+420 TO 0+470 541

SECTION H
STN 0+480 TO 0+511 541

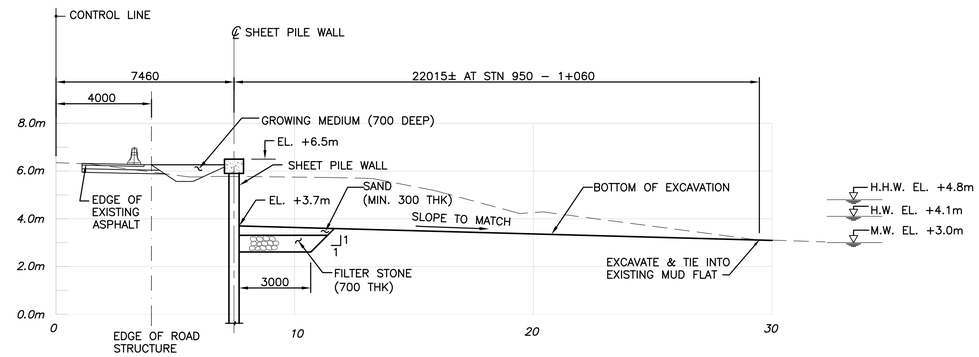

SECTION X
STN 0+950 TO 1+060 542

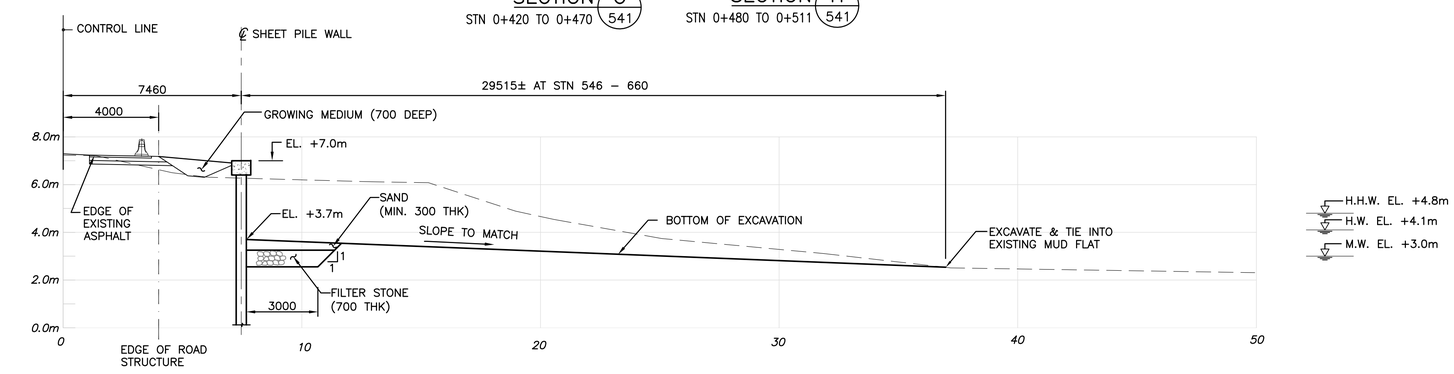

SECTION J
STN 0+546 TO 0+660 541

NOTES:

1. CONTROL LINE IS APPROXIMATELY LOCATED ON EXISTING SHOULDER LINE.
2. FOR DETAILS OF TYPICAL NEW PAVED SHOULDER ROAD STRUCTURE, SEE DWG. 549.
3. FOR DETAILS OF TYPICAL SHEET PILE WALL, SEE DWG. 550.
4. FOR DETAILS OF GROWING MEDIUM (INCLUDING FILTER FABRIC), SEE LANDSCAPE DRAWINGS 565 AND 566.

PRELIMINARY
NOT FOR CONSTRUCTION

2.5m 0m 2.5m 5m
SCALE: 1 : 125

Ref.No.	REFERENCE

KLOHN CRIPPEN

IN ASSOCIATION WITH:

MOFFATT & NICHOL

GL Williams & Associates Ltd.

SHARP & DIAMOND Landscape Architecture Inc

No.	Date	REVISION	Dr'n	Ch'd
P1	APR. 7/09	ISSUED FOR TENDER	J.L.	H.W.

VFPA

VANCOUVER FRASER PORT AUTHORITY
ENGINEERING DEPARTMENT

DESIGN BY	M.C. (MN)
DRAWN BY	R.C. (MN)
APPROVED	H.W. (MN)
DATE	AUG 17, 2007
SCALE	AS SHOWN
VPA SITE	

ROBERTS BANK
EAST CAUSEWAY HABITAT COMPENSATION
SECTIONS
SHEET 2

SIZE	DWG.	SHEET	REV.
D	34-291-546	6 of 12	P1

TITLE BLOCK: DL-TB.dwg

DATE: 2009/04/03 – 12:01pm
PATH: P:\5610 Deltaport Berth 3 Marine Works\CADD\Submittals\Issued drawings\2009-04-07_EAST CAUSEWAY_(FT)\34-291-549.dwg

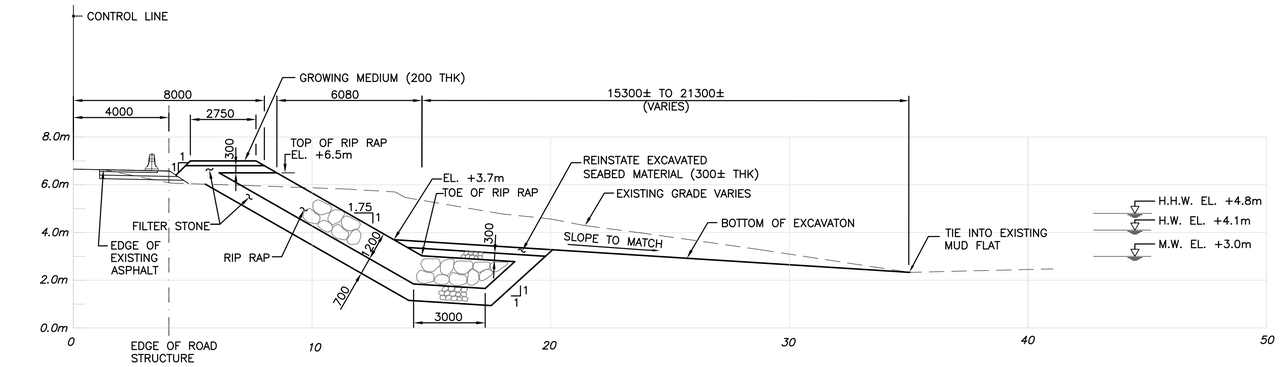

SECTION L
STN 0+660 TO 0+950 542

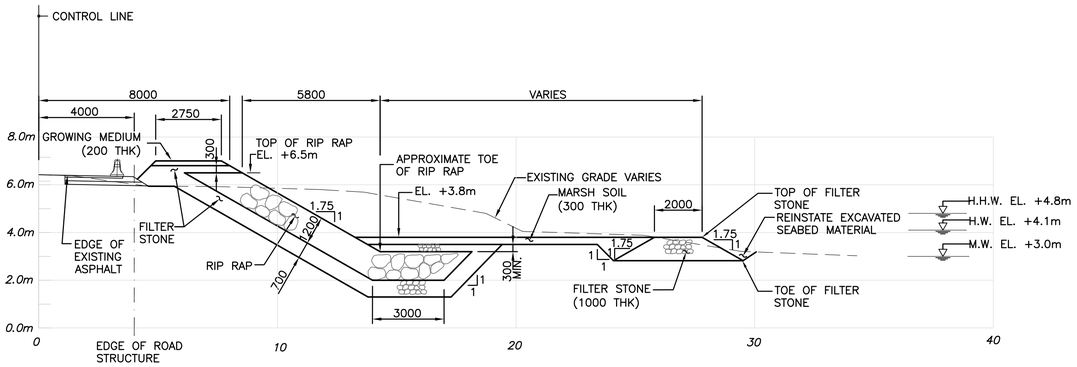

SECTION O O
STN 1+125 TO 1+195 542 543
STN 1+310 TO 1+430
STN 1+537 TO 1+645

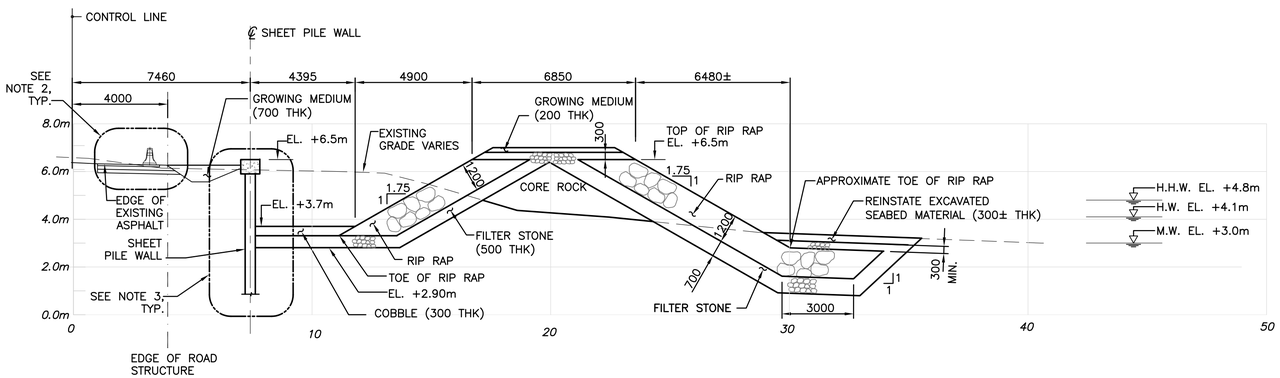

SECTION M
STN 1+060 TO 1+075 542

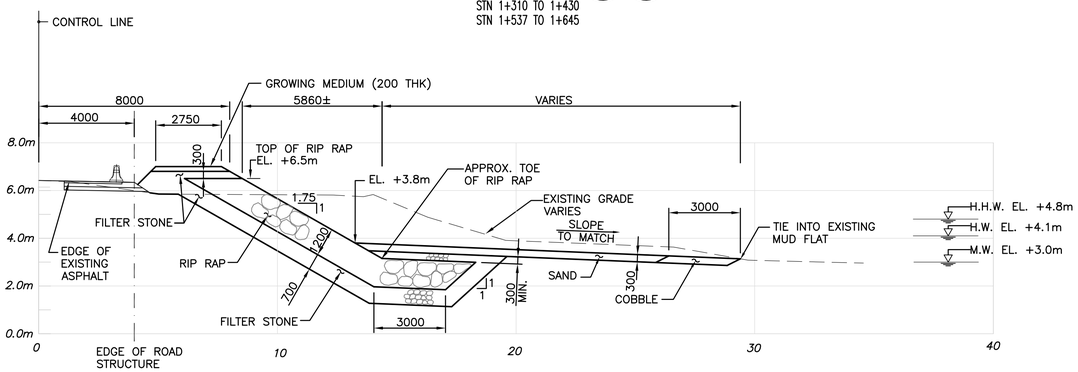

SECTION P P
STN 1+195 TO 1+310 542 543
STN 1+430 TO 1+537
STN 1+675 TO 1+715
STN 1+775 TO 1+835
STN 1+875 TO 1+915
STN 1+955 TO 1+995

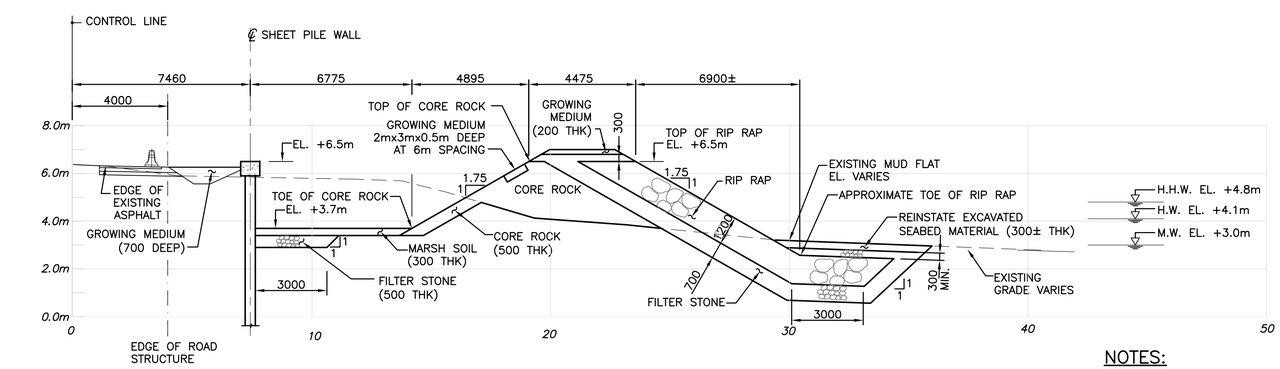

SECTION N
STN 1+075 TO 1+113 542

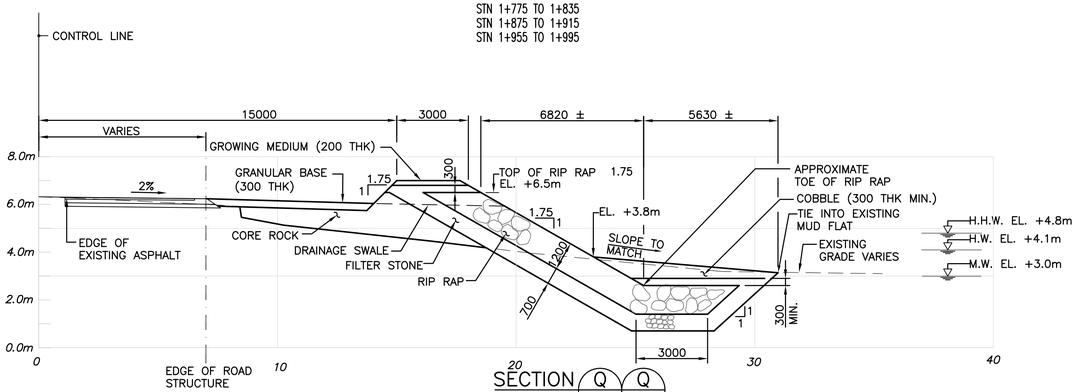

SECTION Q Q
STN 1+650 TO 1+670 543 544
STN 2+140 TO 2+160

NOTES:

1. CONTROL LINE IS APPROXIMATELY LOCATED ON EXISTING SHOULDER LINE.
2. FOR DETAILS OF TYPICAL NEW PAVED SHOULDER ROAD STRUCTURE, SEE DWG. 549.
3. FOR DETAILS OF TYPICAL SHEET PILE WALL, SEE DWG. 550.
4. FOR DETAILS OF GROWING MEDIUM (INCLUDING FILTER FABRIC), SEE LANDSCAPE DRAWINGS 565 AND 566.

PRELIMINARY
NOT FOR CONSTRUCTION

2.5m 0m 2.5m 5m
SCALE: 1 : 125

Ref.No.	REFERENCE

KLOHN CRIPPEN

IN ASSOCIATION WITH:

MacFATT & NICHOL

GL Williams & Associates Ltd.

SHARP & DIAMOND Landscape Architecture Inc

No.	Date	REVISION	Dr'n	Ch'd
P1	APR. 7/09	ISSUED FOR TENDER	J.L.	H.W.

VFPA
VANCOUVER FRASER PORT AUTHORITY
ENGINEERING DEPARTMENT

DESIGN BY	M.C. (MN)
DRAWN BY	R.C. (MN)
APPROVED	H.W. (MN)
DATE	AUG 17, 2007
SCALE	AS SHOWN
VPA SITE	

ROBERTS BANK
EAST CAUSEWAY HABITAT COMPENSATION
SECTIONS
SHEET 3

SIZE D | DWG. 34-291-547 | SHEET 7 of 12 | REV. P1

TITLE BLOCK: DL-TB.dwg

DATE: 2009/04/03 - 12:00pm
PATH: P:\5610 Deltaport Berth 3 Marine Works\CADD\Submittals\issued drawings\2009-04-07_EAST CAUSEWAY_IFT\34-291-545-549.dwg

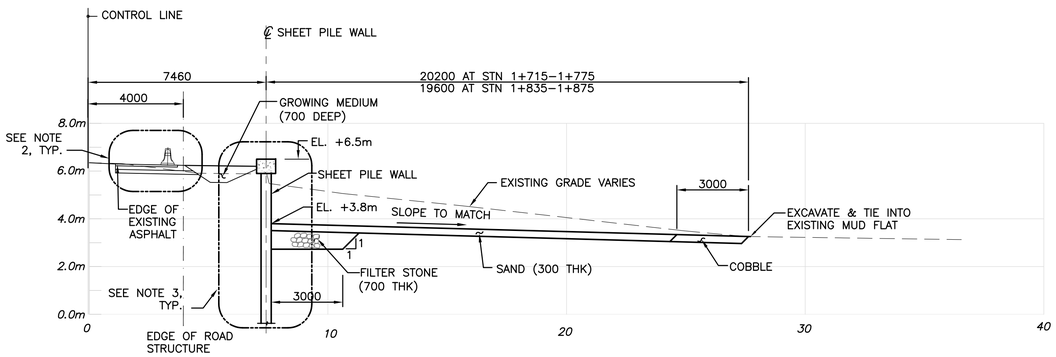

SECTION R 543
STN 1+715 TO 1+775
STN 1+835 TO 1+875

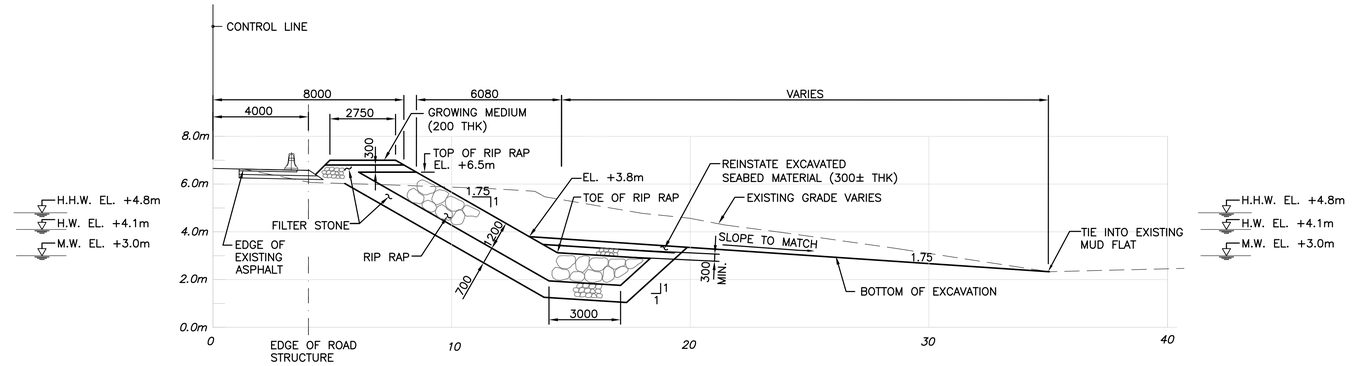

SECTION T 544
STN 2+075 TO 2+140
STN 2+160 TO 2+532

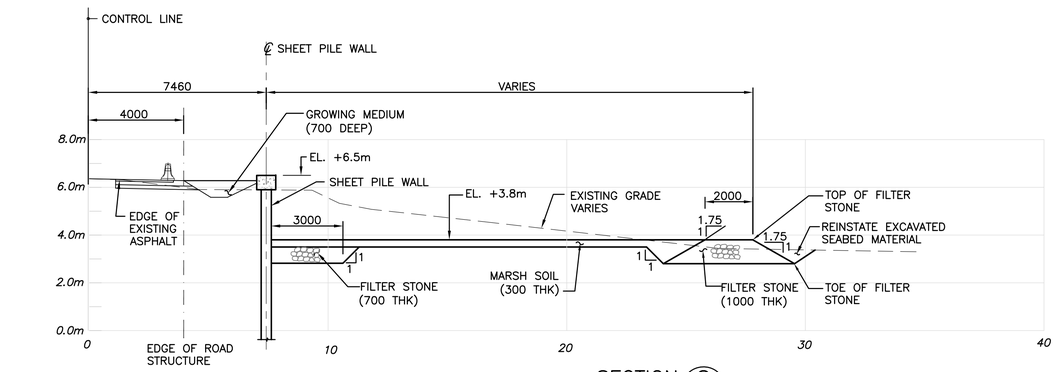

SECTION S 543
STN 1+915 TO 1+955
STN 1+995 TO 2+075

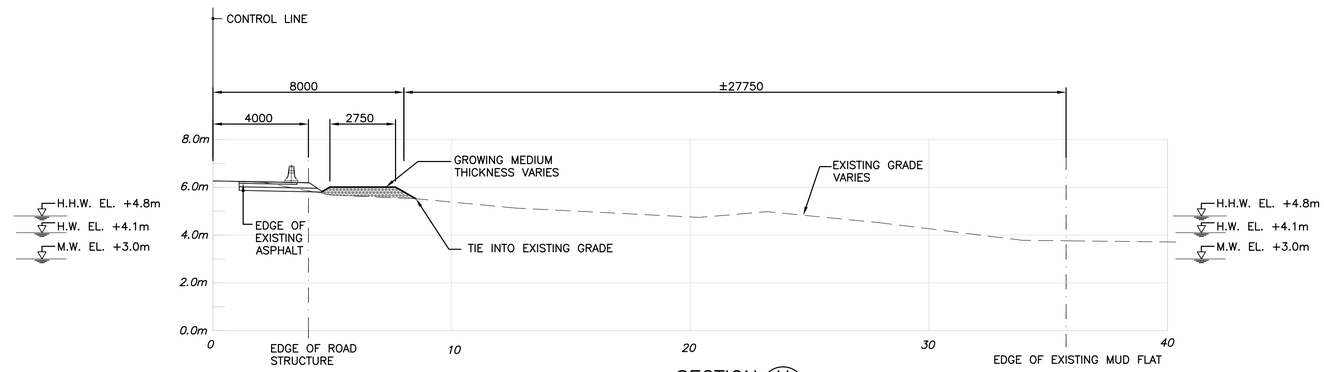

SECTION U 544
STN 2+563

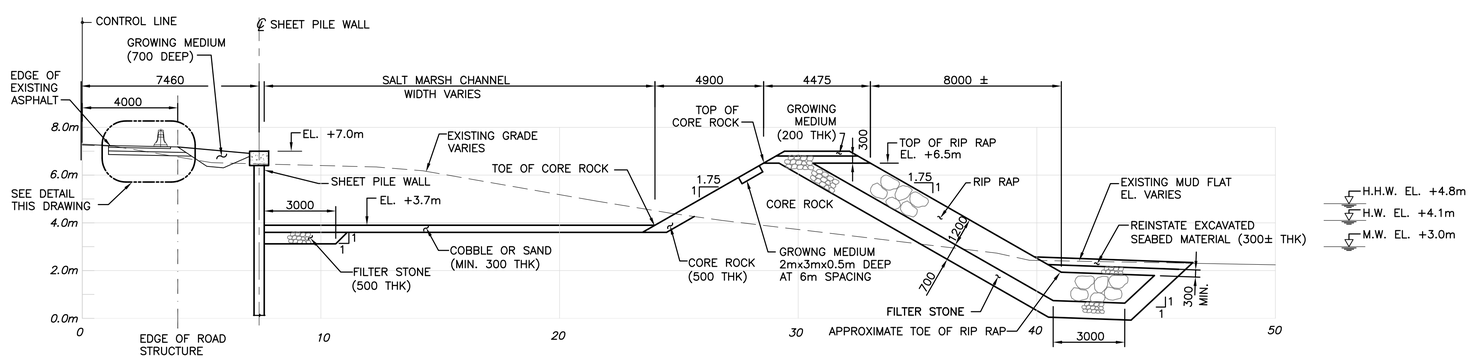

SECTION V 541
STN 0+511 TO 0+538.5

NOTES:

1. CONTROL LINE IS APPROXIMATELY LOCATED ON EXISTING SHOULDER LINE.
2. FOR DETAILS OF TYPICAL NEW PAVED SHOULDER ROAD STRUCTURE, SEE DWG. 549.
3. FOR DETAILS OF TYPICAL SHEET PILE WALL, SEE DWG. 550.
4. FOR DETAILS OF GROWING MEDIUM (INCLUDING FILTER FABRIC), SEE LANDSCAPE DRAWINGS 565 AND 566.

PRELIMINARY
NOT FOR CONSTRUCTION

2.5m 0m 2.5m 5m
SCALE: 1 : 125

Ref.No.	REFERENCE

KLOHN CRIPPEN

IN ASSOCIATION WITH:

MOFFATT & NICHOL

GL Williams & Associates Ltd.

SHARP & DIAMOND Landscape Architecture Inc

No.	Date	REVISION	Dr'n	Ch'd
P1	APR. 7/09	ISSUED FOR TENDER	J.L.	H.W.

VFPA
VANCOUVER FRASER PORT AUTHORITY
ENGINEERING DEPARTMENT

DESIGN BY	M.C. (MN)
DRAWN BY	R.C. (MN)
APPROVED	H.W. (MN)
DATE	AUG 17, 2007
SCALE	AS SHOWN
VPA SITE	

ROBERTS BANK
EAST CAUSEWAY HABITAT COMPENSATION
SECTIONS
SHEET 4

SIZE	DWG.	SHEET	REV.
D	34–291–548	8 of 12	P1

TITLE BLOCK: DL-TB.dwg

DATE: 2009/04/03 – 11:41am
PATH: P:\5610 Deltaport Berth 3 Marine Works\CADD\Submittals\Issued drawings\2009-04-07_EAST CAUSEWAY_IFT\34-291-545-549.dwg

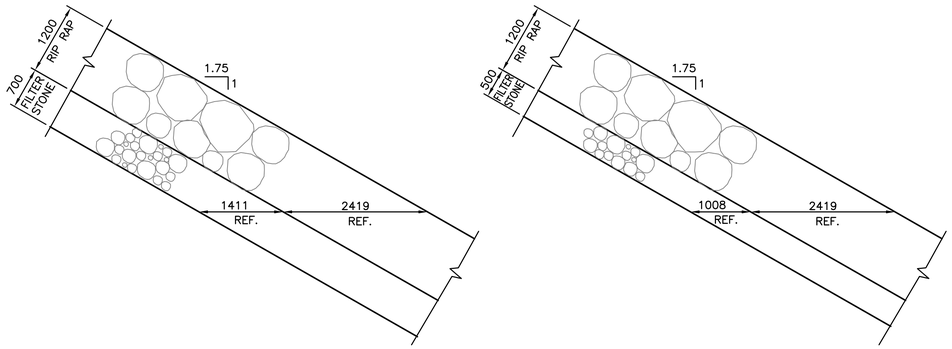

TYPICAL SLOPE PROTECTION DIMENSIONS U.N.O.

1:50

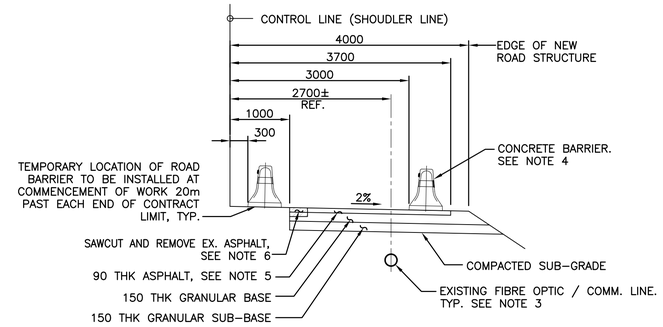

PAVED SHOULDER ROAD STRUCTURE

1:50

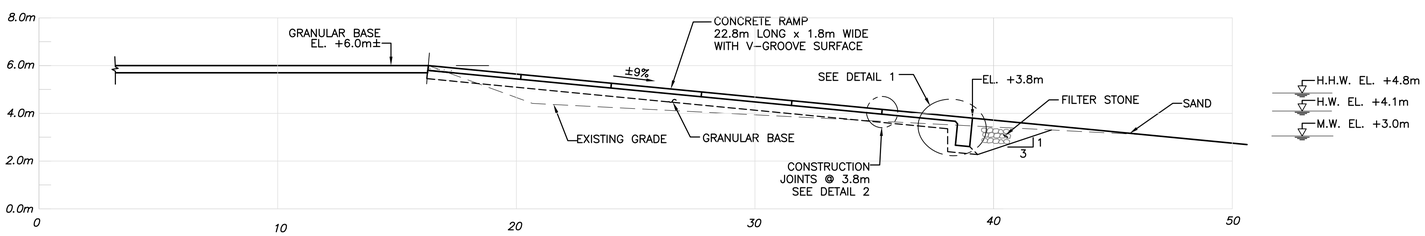

CONCRETE PEDESTRIAN RAMP

1:125

NOTES:

1. CONTROL LINE IS APPROXIMATELY LOCATED ON EXISTING SHOULDER LINE.
2. FOR DETAILS OF TYPICAL SHEET PILE WALL, SEE DWG. 550.
3. PRECISE LOCATION AND DEPTH OF THE EXISTING FIBRE OPTIC / COMM. LINE TO BE CONFIRMED BY THE CONTRACTOR PRIOR TO EXCAVATION, THE CONTRACTOR SHALL TAKE ALL MEASURES TO PROTECT THE EXISTING FIBRE OPTIC / COMM. LINE AGAINST DAMAGE DURING EXCAVATION AND CONSTRUCTION.
4. CONCRETE BARRIERS SHALL BE BC MOT APPROVED PRECAST REINFORCED CONCRETE BARRIERS, INCLUDING TRANSITIONS AND ENDS AS REQUIRED. DRAINAGE SLOTS REQUIRED FOR ALL BARRIERS AND SIDE OR TOP MOUNTED REFLECTORS (WHITE) AT 26m SPACING AS APPROVED BY THE ENGINEER. CONCRETE BARRIER SHALL BE 690mm HIGH.
5. 90 THICK ASPHALT SHALL CONSIST OF 30mm OF TYPE 1 (SURFACE COURSE) AND 60mm OF TYPE 2 (LOWER COURSE). SEE SPECIFICATION SECTION 32 12 16.
6. THE EDGE OF THE EXISTING ASPHALT VARIES BUT IT IS GENERALLY LOCATED 1.4m FROM THE CONTROL LINE. THE THICKNESS OF THE EXISTING ASPHALT TO BE REMOVED IS EXPECTED TO BE APPROXIMATELY 125mm THICK.
7. FOR DETAILS OF GROWING MEDIUM (INCLUDING FILTER FABRIC), SEE LANDSCAPE DRAWINGS 565 AND 566.

PRELIMINARY
NOT FOR CONSTRUCTION

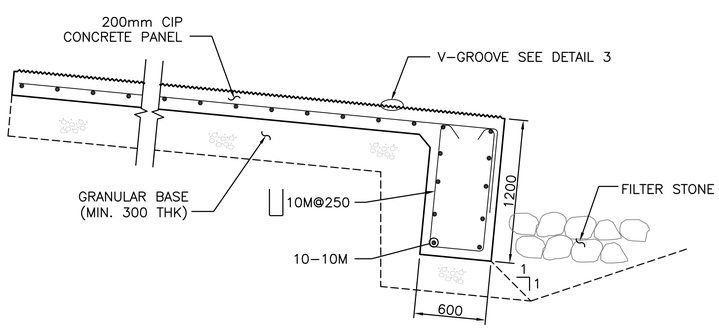

DETAIL 1
1:25

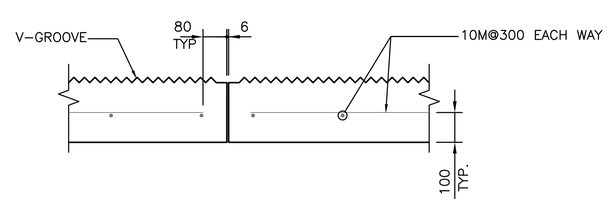

DETAIL 2
1:10

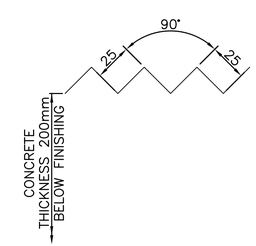

DETAIL 3
NTS

1m 0m 1m 2m
SCALE: 1 : 50

0.2m 0.0m 0.2m 0.4m
SCALE: 1 : 10

2.5m 0m 2.5m 5m
SCALE: 1 : 125

0.5m 0.0m 0.5m 1.0m
SCALE: 1 : 25

Ref.No.	REFERENCE

KLOHN CRIPPEN

IN ASSOCIATION WITH:

MOFFATT & NICHOL

GL Williams & Associates Ltd.

SHARP & DIAMOND Landscape Architecture Inc

No.	Date	REVISION	Dr'n	Ch'd
P1	APR. 7/09	ISSUED FOR TENDER	J.L.	H.W.

VFPA

VANCOUVER FRASER PORT AUTHORITY
ENGINEERING DEPARTMENT

DESIGN BY	M.C. (MN)
DRAWN BY	R.C. (MN)
APPROVED	H.W. (MN)
DATE	AUG 17, 2007
SCALE	AS SHOWN
VPA SITE	

ROBERTS BANK
EAST CAUSEWAY HABITAT COMPENSATION
SECTIONS
SHEET 5

SIZE	DWG.	SHEET	REV.
D	34-291-549	9 of 12	P1

TITLE BLOCK: DL-TB.dwg

DATE: 2009/04/03 – 11:59am
PATH: P:\5610 Deltaport Berth 3 Marine Works\CADD\Submittals\Issued drawings\2009-04-07_EAST CAUSEWAY_IFT\34-291-545-549.dwg

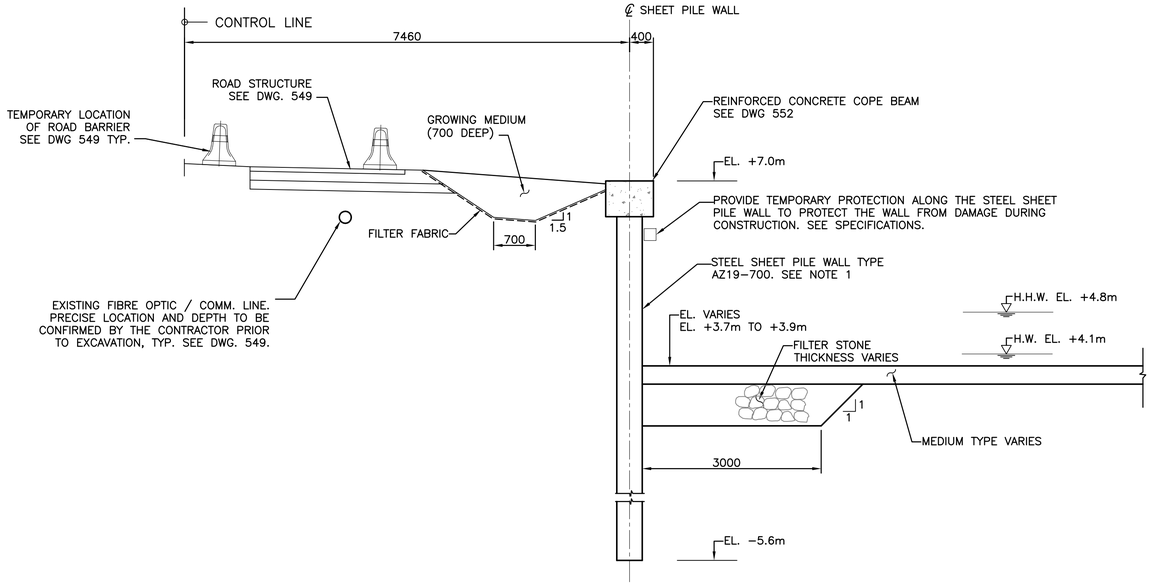

DETAIL 1 – STEEL SHEET PILE WALL @ EL. +7.0m HEIGHT

1:50

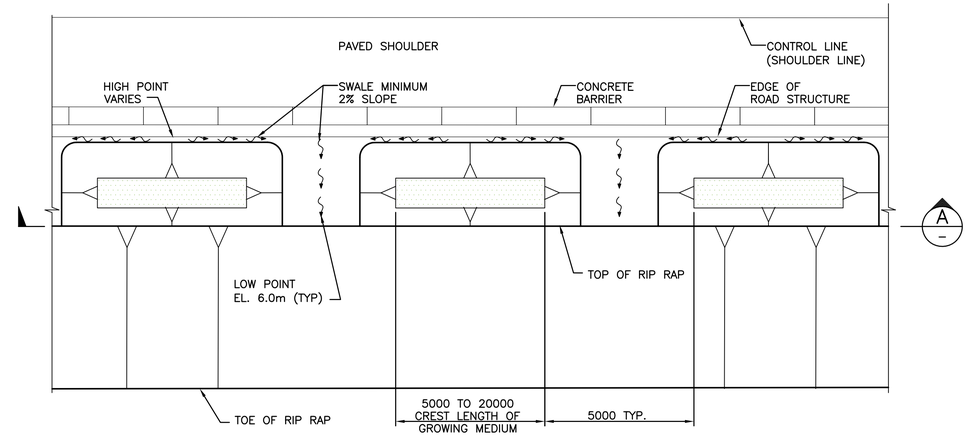

TYPICAL DRAINAGE THROUGH GROWING MEDIUM*

1:100

NOTES:

STN.	CREST LENGTH OF GROWING MEDIUM
0+660 TO 1+460	20000
1+460 TO 1+960	12000
1+960 TO END	5000

* NOT REQUIRED BEHIND SHEET PILE WALL

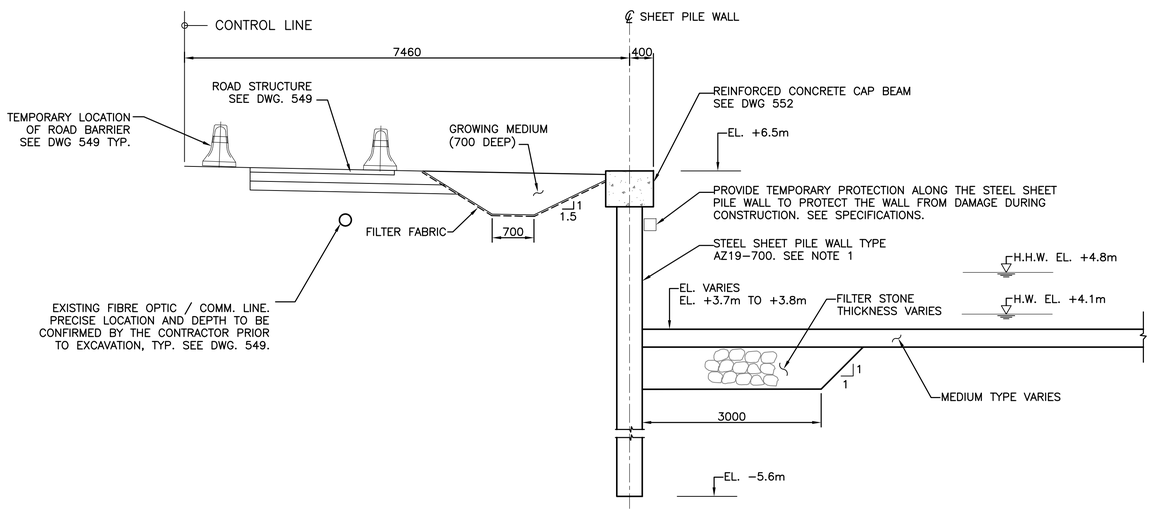

DETAIL 2 – STEEL SHEET PILE WALL @ EL. +6.5m HEIGHT

1:50

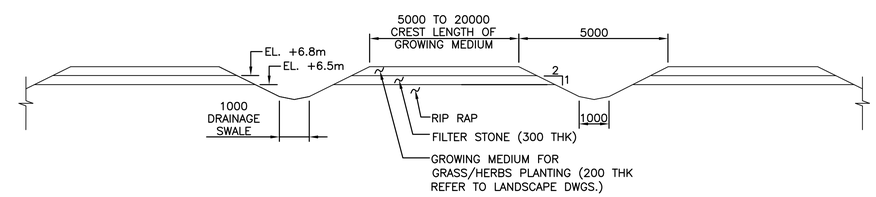

SECTION A

SCALE: 1:100

NOTES:

1. PAINT EXPOSED FACE ONLY FROM PILE TOP (CUT-OFF) TO EL.0.0m.

1m 0m 1m 2m

SCALE: 1 : 50

2m 0m 2m 4m

SCALE: 1 : 100

PRELIMINARY
NOT FOR CONSTRUCTION

Ref.No.	REFERENCE

KLOHN CRIPPEN

IN ASSOCIATION WITH:

MOFFATT & NICHOL

GL Williams & Associates Ltd.

SHARP & DIAMOND Landscape Architecture Inc

No.	Date	REVISION	Dr'n	Ch'd
P1	APR. 7/09	ISSUED FOR TENDER	J.L.	H.W.

VFPA

VANCOUVER FRASER PORT AUTHORITY
ENGINEERING DEPARTMENT

DESIGN BY	C.R. (MN)
DRAWN BY	R.C. (MN)
APPROVED	H.W. (MN)
DATE	AUG 17, 2007
SCALE	AS SHOWN
VPA SITE	

ROBERTS BANK
EAST CAUSEWAY HABITAT COMPENSATION
DETAILS
SHEET 1

SIZE D | DWG. 34-291-550 | SHEET 10 of 12 | REV. P1

TITLE BLOCK: DL-TB.dwg

DATE: 2009/04/02 – 4:40pm
PATH: P:\5610 Deltaport Berth 3 Marine Works\CADD\Submittals\Issued drawings\2009-04-07_EAST CAUSEWAY_IFT\34-291-550.dwg

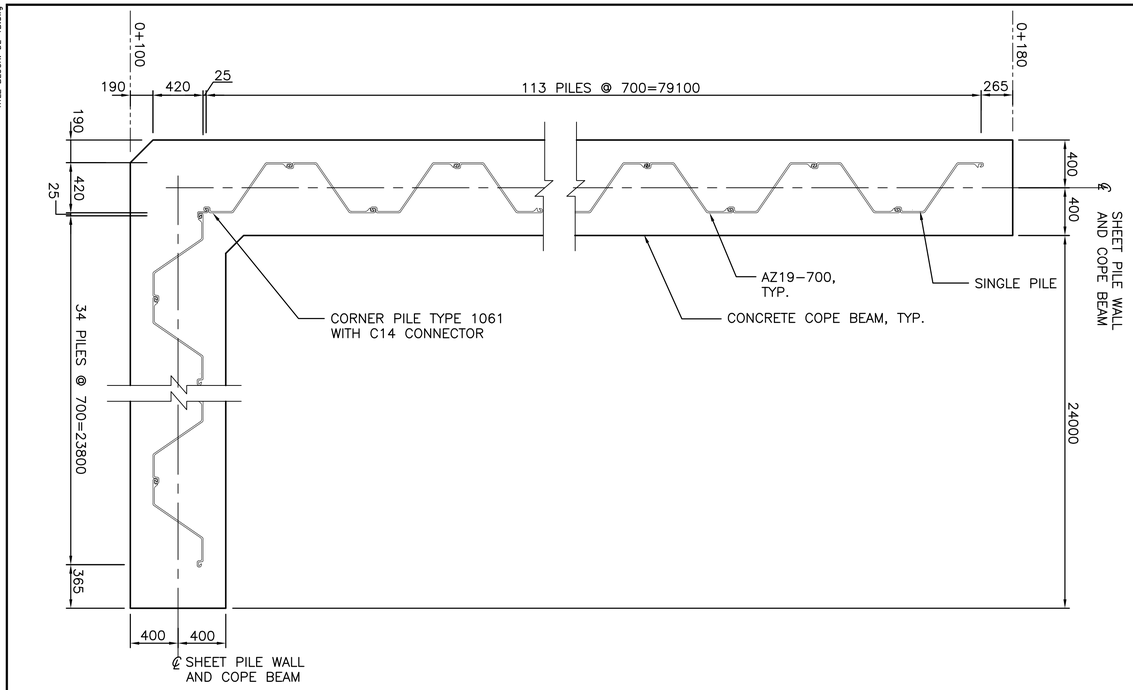

SHEET PILE WALL (STATION 0+100 TO 0+180)

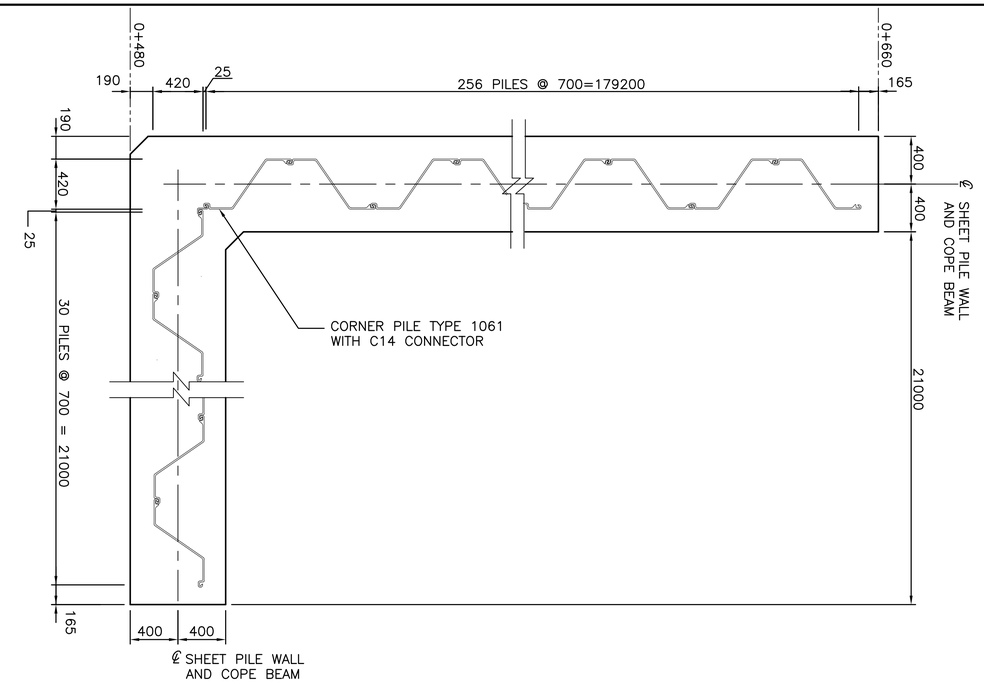

SHEET PILE WALL (STATION 0+480 TO 0+660)

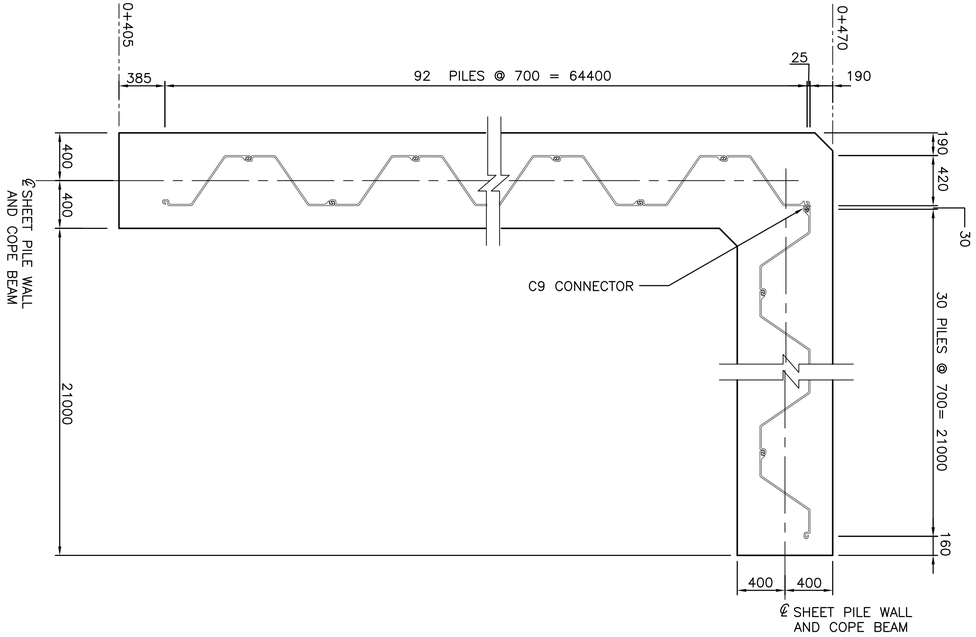

SHEET PILE WALL (STATION 0+405 TO 0+470)

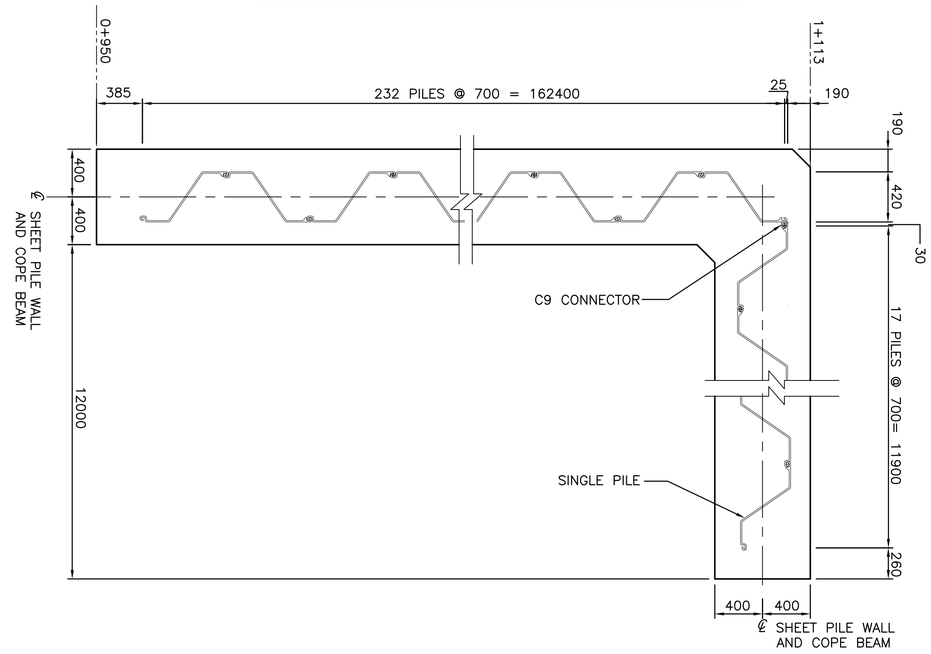

SHEET PILE WALL (STATION 0+950 TO 1+113)

PRELIMINARY
NOT FOR CONSTRUCTION

0.5m 0m 0.5m 1.0m
SCALE: 1 : 25

Ref.No.	REFERENCE

KLOHN CRIPPEN

IN ASSOCIATION WITH:

MOFFATT & NICHOL

GL Williams & Associates Ltd.

SHARP & DIAMOND Landscape Architecture Inc

No.	Date	REVISION	Dr'n	Ch'd
P1	APR. 7/09	ISSUED FOR TENDER	J.L.	H.W.

VFPA

VANCOUVER FRASER PORT AUTHORITY
ENGINEERING DEPARTMENT

DESIGN BY	C.R. (MN)
DRAWN BY	R.C. (MN)
APPROVED	H.W. (MN)
DATE	AUG 17, 2007
SCALE	AS SHOWN
VPA SITE	

ROBERTS BANK
EAST CAUSEWAY HABITAT COMPENSATION
SHEET PILE WALL AND COPE BEAM
LAYOUT PLAN

SIZE	DWG.	SHEET	REV.
D	34-291-551	11 of 12	P1

TITLE BLOCK: DL-TB.dwg

DATE: 2009/04/02 - 4:36pm
PATH: P:\5610 Deltaport Berth 3 Marine Works\CADD\Submittals\Issued drawings\2009-04-07_EAST CAUSEWAY_IFT\34-291-551-552.dwg

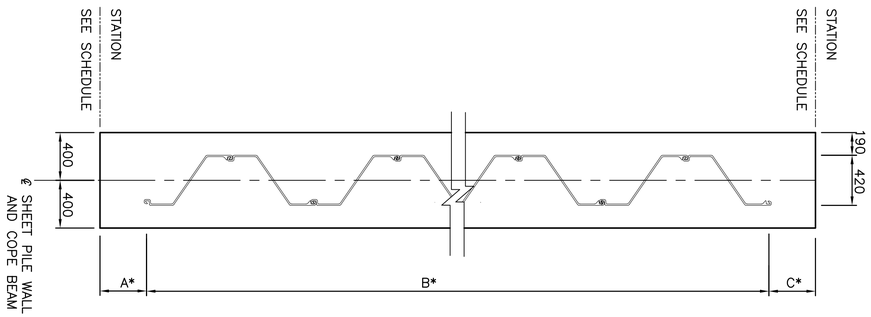

SHEET PILE WALL (STRAIGHT SEGMENTS)

1:25 * FOR DIMENSIONS SEE SCHEDULE (THIS DRAWING)

SHEET PILE WALL STRAIGHT SEGMENTS			
STATION	A	B	C
1+715 TO 1+775	250	85 PILES @ 700 = 59500	250
1+835 TO 1+875	400	56 PILES @ 700 = 39200	400
1+915 TO 1+955	400	56 PILES @ 700 = 39200	400
1+995 TO 2+075	100	114 PILES @ 700 = 79800	100

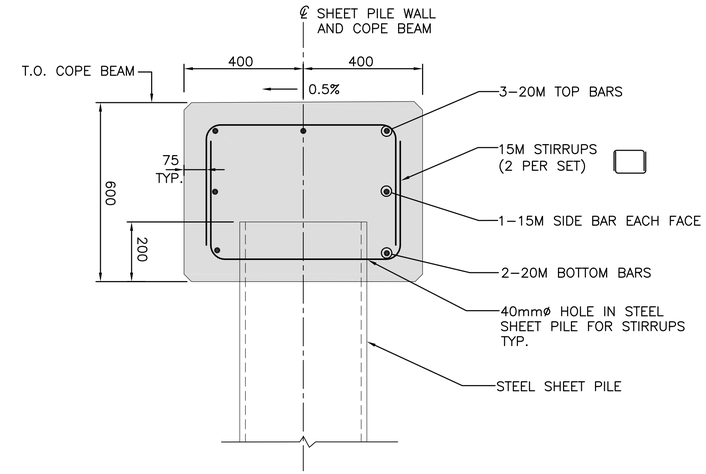

TYPICAL SECTION – COPE BEAM REINFORCING

1:10

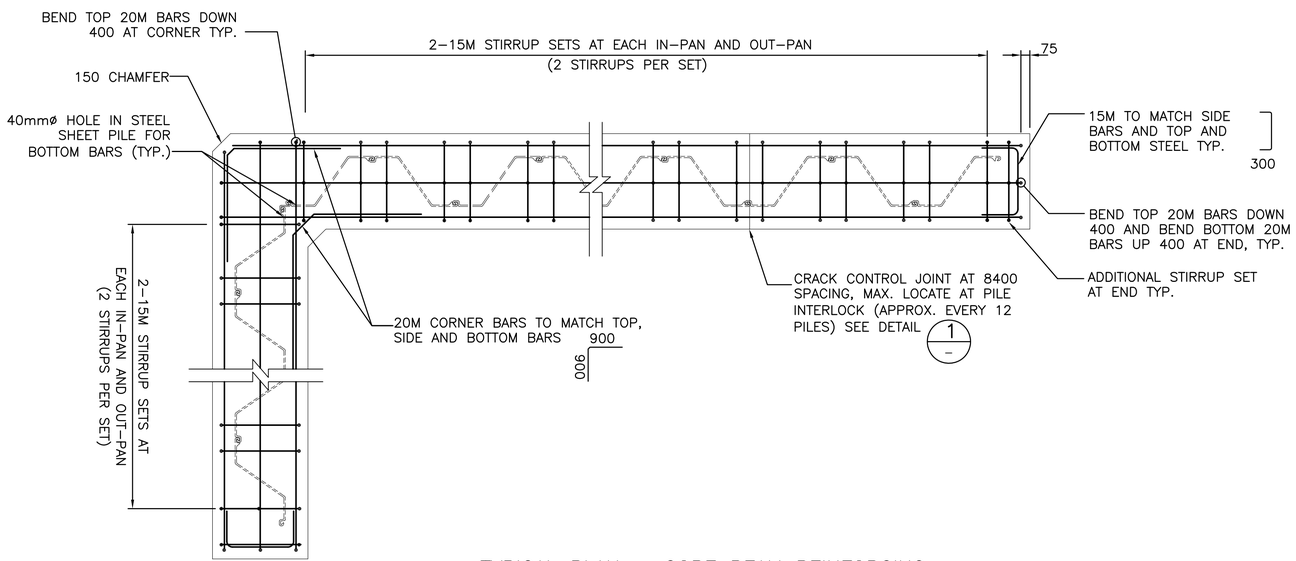

TYPICAL PLAN – COPE BEAM REINFORCING

1:25

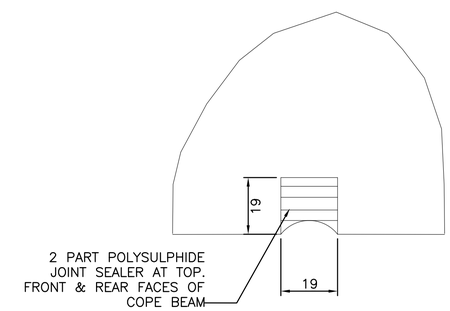

DETAIL 1

NTS

PRELIMINARY
NOT FOR CONSTRUCTION

0.2m 0m 0.2m 0.4m
SCALE: 1 : 10

0.5m 0m 0.5m 1.0m
SCALE: 1 : 25

Ref.No.	REFERENCE

KLOHN CRIPPEN

IN ASSOCIATION WITH:

MOFFATT & NICHOL

GL Williams & Associates Ltd.

SHARP & DIAMOND Landscape Architecture Inc

No.	Date	REVISION	Dr'n	Ch'd
P1	APR. 7/09	ISSUED FOR TENDER	J.L.	H.W.

VFPA

VANCOUVER FRASER PORT AUTHORITY
ENGINEERING DEPARTMENT

DESIGN BY	C.R. (MN)
DRAWN BY	R.C. (MN)
APPROVED	H.W. (MN)
DATE	AUG 17, 2007
SCALE	NTS
VPA SITE	

ROBERTS BANK
EAST CAUSEWAY HABITAT COMPENSATION
COPE BEAM REINFORCING DETAILS

SIZE	DWG.	SHEET	REV.
D	34–291–552	12 of 12	P1

TITLE BLOCK: DL-TB.dwg

DATE: 2009/04/02 – 4:39pm
PATH: P:\5610 Deltaport Berth 3 Marine Works\CADD\Submittals\issued drawings\2009-04-07_EAST CAUSEWAY_IFT\34-291-551-552.dwg

TITLE BLOCK: DL-TB.dwg

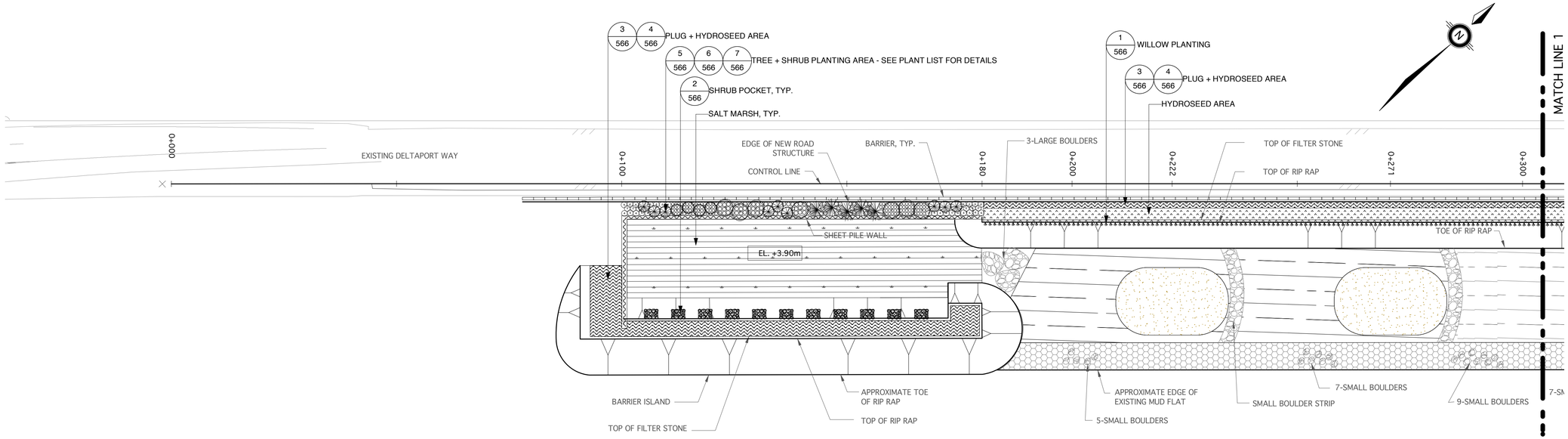

LEGEND

- TREES
- WILLOW PLANTING
- SHRUBS
- SHRUB POCKETS
- PLUG/HYDROSEED
- HYDROSEED
- SALT MARSH

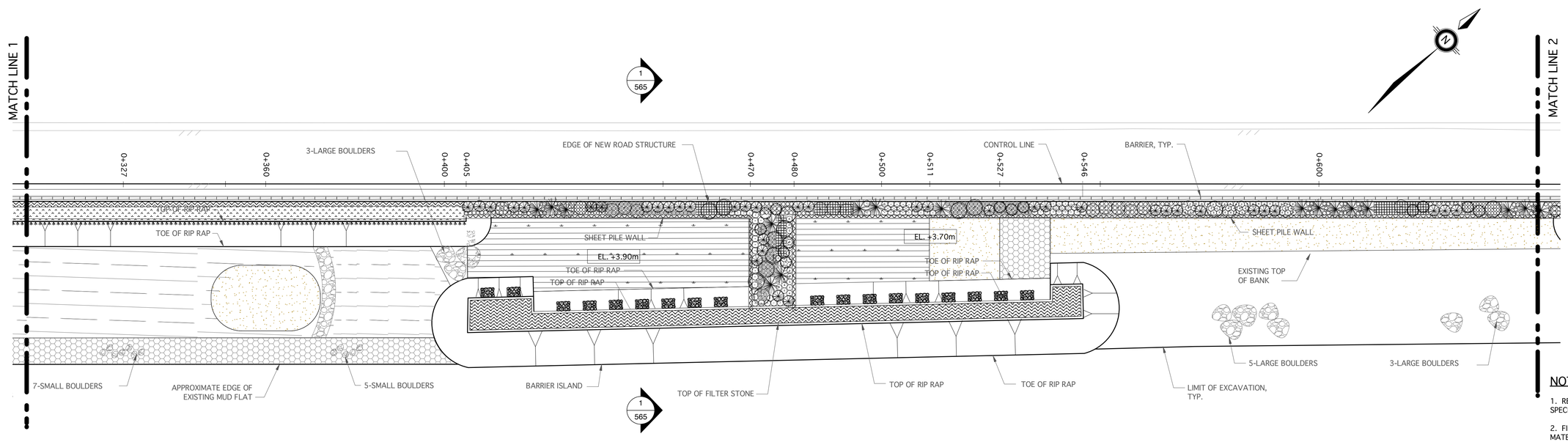

NOTES:

1. REFER TO DRAWINGS 34-291-564 FOR PLANT SPECIES, SIZES, AND QUANTITIES.
2. FINAL PLACEMENT AND SPACING OF PLANT MATERIAL TO BE APPROVED BY CONSULTANT.
3. REFER TO ENGINEERING DRAWINGS FOR ALL NON-LANDSCAPE WORK.

PRELIMINARY
NOT FOR CONSTRUCTION

10m 0m 10m 20m
SCALE: 1: 500

Ref.No.	REFERENCE

KLOHN CRIPPEN

IN ASSOCIATION WITH:

Moffatt & Nichol

GL Williams & Associates Ltd.

SHARP & DIAMOND Landscape Architecture Inc

No.	Date	REVISION	Dr'n	Ch'd
P1	APR. 7/09	ISSUED FOR TENDER	PCH	KL

VFPA

VANCOUVER FRASER PORT AUTHORITY
ENGINEERING DEPARTMENT

DESIGN BY	KL/PCH (SD)
DRAWN BY	PCH (SD)
APPROVED	
DATE	AUG 17/2007
SCALE	AS SHOWN
VPA SITE	

ROBERTS BANK
EAST CAUSEWAY HABITAT COMPENSATION
LANDSCAPE PLAN
SHEET 1

SIZE	DWG.	SHEET	REV.
D	34-291-561	1 of 6	P1

TITLE BLOCK: DL-TB.dwg

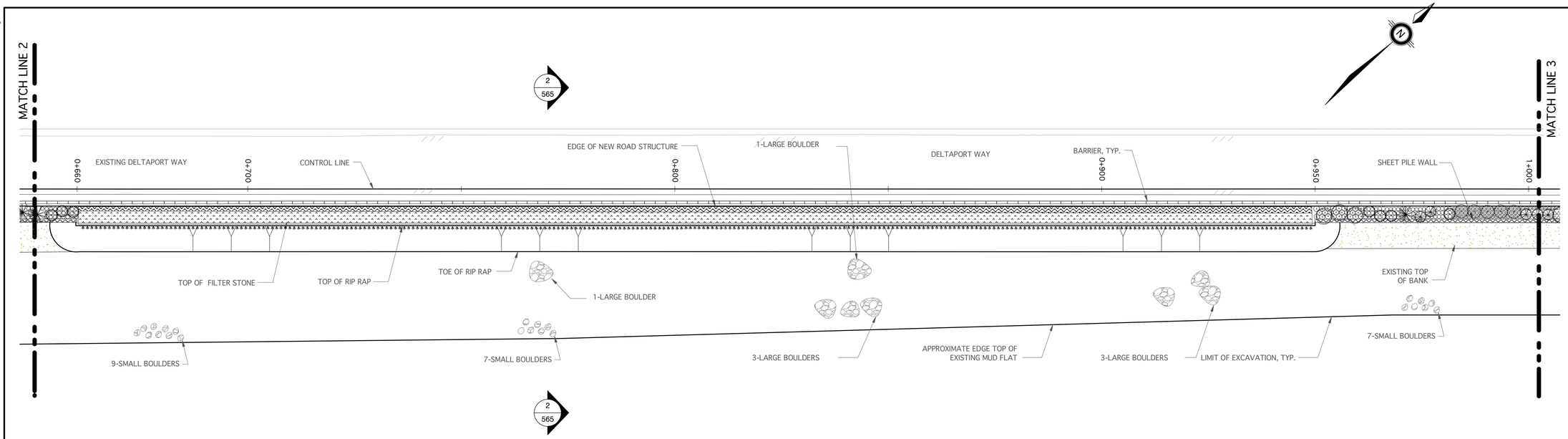

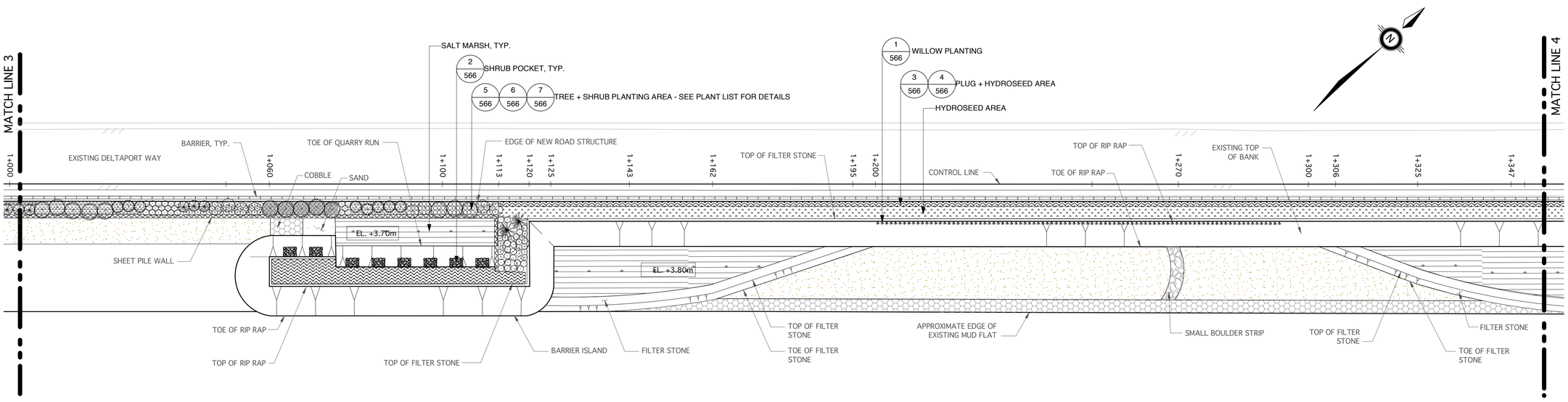

LEGEND

- TREES
- WILLOW PLANTING
- SHRUBS
- SHRUB POCKETS
- PLUG/HYDROSEED
- HYDROSEED
- SALT MARSH

NOTES:

1. REFER TO DRAWINGS 34-291-564 FOR PLANT SPECIES, SIZES, AND QUANTITIES.
2. FINAL PLACEMENT AND SPACING OF PLANT MATERIAL TO BE APPROVED BY CONSULTANT.
3. REFER TO ENGINEERING DRAWINGS FOR ALL NON-LANDSCAPE WORK.

10m 0m 10m 20m

SCALE: 1: 500

PRELIMINARY
NOT FOR CONSTRUCTION

Ref.No.	REFERENCE

IN ASSOCIATION WITH:

KLOHN CRIPPEN

Moffatt & Nichol

GL Williams & Associates Ltd.

SHARP & DIAMOND Landscape Architecture Inc

No.	Date	REVISION	Dr'n	Ch'd
P1	APR. 7/09	ISSUED FOR TENDER	PCH	KL

VFPA

VANCOUVER FRASER PORT AUTHORITY
ENGINEERING DEPARTMENT

DESIGN BY	KL/PCH (SD)
DRAWN BY	PCH (SD)
APPROVED	
DATE	AUG 17/2007
SCALE	
VPA SITE	

ROBERTS BANK
EAST CAUSEWAY HABITAT COMPENSATION
LANDSCAPE PLAN
SHEET 2

SIZE	DWG.	SHEET	REV.
D	34-291-562	2 of 6	P1

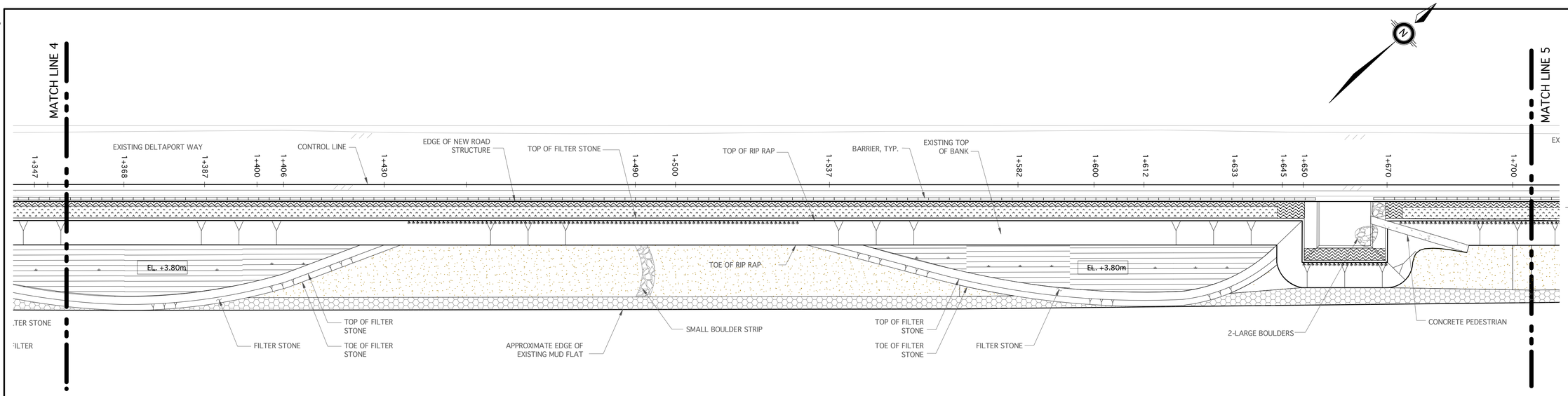

LEGEND

- TREES
- WILLOW PLANTING
- SHRUBS
- SHRUB POCKETS
- PLUG/HYDROSEED
- HYDROSEED
- SALT MARSH

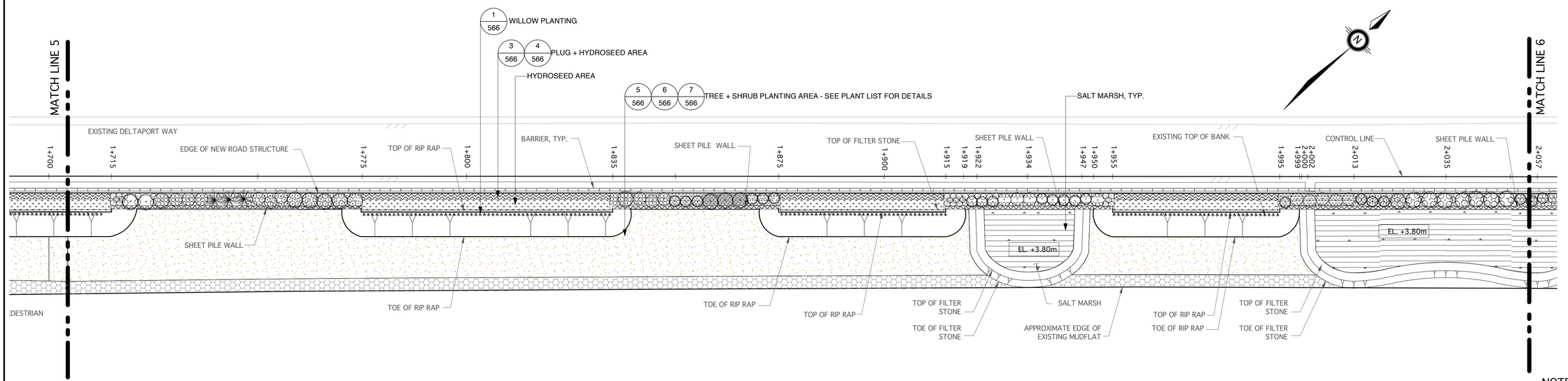

NOTES:

1. REFER TO DRAWINGS 34-291-564 FOR PLANT SPECIES, SIZES, AND QUANTITIES.
2. FINAL PLACEMENT AND SPACING OF PLANT MATERIAL TO BE APPROVED BY CONSULTANT.
3. REFER TO ENGINEERING DRAWINGS FOR ALL NON-LANDSCAPE WORK.

PRELIMINARY
NOT FOR CONSTRUCTION

10m 0m 10m 20m
SCALE: 1: 500

Ref.No.	REFERENCE

KLOHN CRIPPEN

IN ASSOCIATION WITH:

Moffatt & Nichol

GL Williams & Associates Ltd.

SHARP & DIAMOND Landscape Architecture Inc

No.	Date	REVISION	Dr'n	Ch'd
P1	APR. 7/09	ISSUED FOR TENDER	PCH	KL

VFPA
VANCOUVER FRASER PORT AUTHORITY
ENGINEERING DEPARTMENT

DESIGN BY	KL/PCH (SD)
DRAWN BY	PCH (SD)
APPROVED	
DATE	AUG 17/2007
SCALE	AS SHOWN
VPA SITE	

ROBERTS BANK
EAST CAUSEWAY HABITAT COMPENSATION
LANDSCAPE PLAN
SHEET 3

SIZE	DWG.	SHEET	REV.
D	34-291-563	3 of 6	P1

TITLE BLOCK: DL-TB.dwg

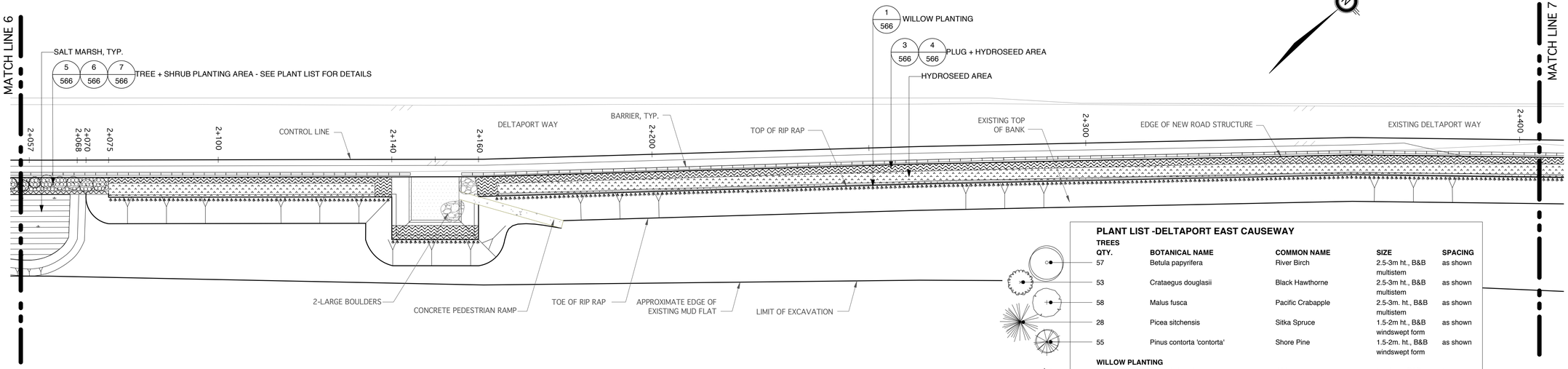

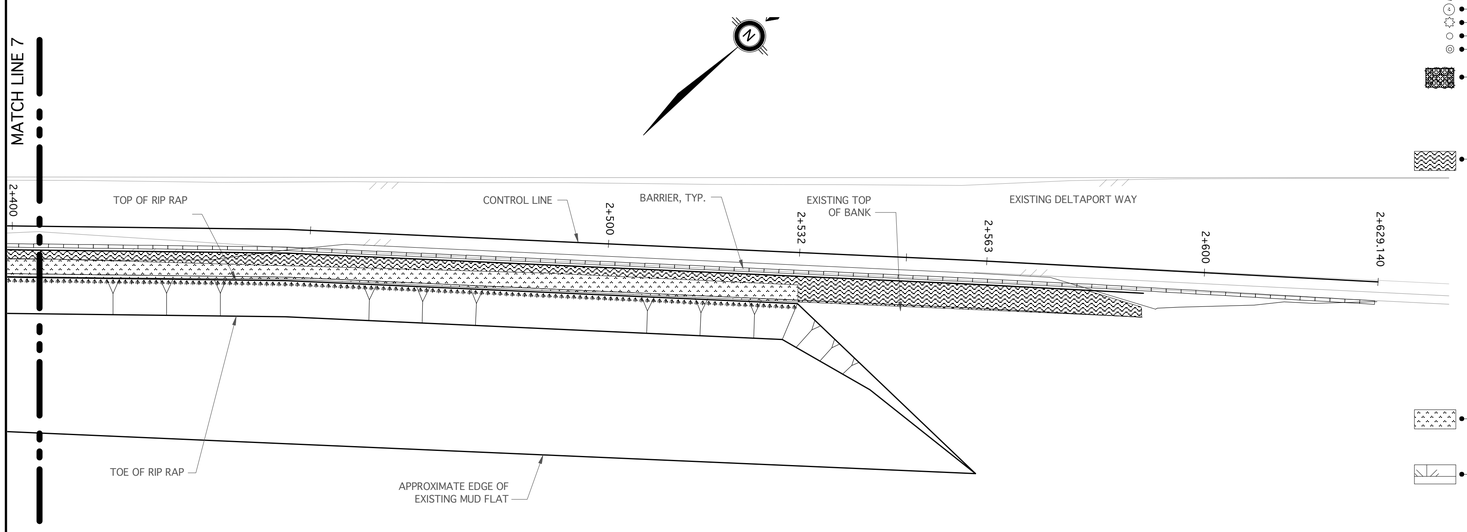

LEGEND

- TREES
- WILLOW PLANTING
- SHRUBS
- SHRUB POCKETS
- PLUG/HYDROSEED
- HYDROSEED
- SALT MARSH

PLANT LIST -DELTAPORT EAST CAUSEWAY

TREES

QTY.	BOTANICAL NAME	COMMON NAME	SIZE	SPACING
57	Betula papyrifera	River Birch	2.5-3m ht., B&B multistem	as shown
53	Crataegus douglasii	Black Hawthorne	2.5-3m ht., B&B multistem	as shown
58	Malus fusca	Pacific Crabapple	2.5-3m. ht., B&B multistem	as shown
28	Picea sitchensis	Sitka Spruce	1.5-2m ht., B&B windswept form	as shown
55	Pinus contorta 'contorta'	Shore Pine	1.5-2m. ht., B&B windswept form	as shown

WILLOW PLANTING

1315	Salix sitchensis	Willow	1 gal pot, B&B	1m o.c.

ROADSIDE SHRUBS

QTY.	BOTANICAL NAME	COMMON NAME	SIZE	SPACING
175	Amelanchier alnifolia 'coastal'	Coastal Service Berry	#5 pot	1050mm o.c.
398	Gaultheria shallon	Salal	#1 pot	450mm o.c.
350	Mahonia aquifolium	Oregon Grape	#2 pot	450mm o.c.
462	Potentilla anserina 'pacifica'	Pacific Silverweed	#2 pot	450mm o.c.
346	Ribes sanguineum	Red Currant	#5 pot	900mm o.c.
251	Rosa nootkana	Nootka's Rose	#2 pot	900mm o.c.
241	Symphoricarpos ssp.	Snowberry	#2 pot	600mm o.c.
396	Vaccinium ovatum	Evergreen Huckleberry	#2 pot	600mm o.c.

BARRIER ISLAND SHRUB POCKETS

QTY.	BOTANICAL NAME	COMMON NAME	SIZE	SPACING
304	Holodiscus discolor	Oceanspray	#2 pot	450mm o.c.
190	Rosa gymnocarpa	Baldhip Rose	#2 pot	900mm o.c.
1065	Leymus mollis	American Dunegrass	plug	450mm o.c.

HERBACEOUS PERENNIALS AND GRASSES

Tot. QTY.	BOTANICAL NAME	COMMON NAME	SIZE	SPACING
10,340				
5%	Abronia latifolia	Sand Verbena	3.5" pot	600mm o.c.
10%	Ambrosia chamissonis	Silver Burweed	plug	600mm o.c.
10%	Allium cernuum	Nodding Wild Onion	plug	600mm o.c.
10%	Armeria maritima	Common Thrift	3.5" pot	600mm o.c.
4%	Carex pachystachya	Sand Dune Sedge	plug	600mm o.c.
4%	Carex pansa	Thick Headed Sedge	plug	600mm o.c.
4%	Carex macrocephala	Large Headed Sedge	plug	600mm o.c.
7%	Convulvulus soldanella	Beach Morning Glory	plug	600mm o.c.
4%	Fragraria chiloensis	Coastal Strawberry	3.5" pot	600mm o.c.
5%	Lathyrus japonicus	Beach Pea	plug	600mm o.c.
10%	Lupinus littoralis	Seashore Lupine	3.5" pot	600mm o.c.
10%	Penstemon serrulatus	Coast Penstemon	3.5" pot	600mm o.c.
4%	Poa macrantha	Seashore Bluegrass	plug	600mm o.c.
5%	Sedum oreganum	Oregon Stonecrop	plug	600mm o.c.
8%	Sedum spathulifolium	Pacific Stonecrop	plug	600mm o.c.

HYDROSEED MIX-see specs for seedmix

Tot. QTY	
8,500	M2

SALT MARSH - target species to harvest, see specs for details

Tot. QTY.	BOTANICAL NAME	COMMON NAME		
12,000				
5%	Bolboschoenus (Scirpus) maritimus	Seacoast Bulrush	3" dia. core	750mm o.c.
25%	Distichlis spicata	Seashore Saltgrass	3" dia. core	750mm o.c.
45%	Salicornia virginica	Pickleweed	3" dia. core	750mm o.c.
5%	Schoenoplectus (Scirpus) americanus	Three-Square Bulrush	3" dia. core	750mm o.c.
20%	Triglochin maritima	Seaside Arrowgrass	3" dia. core	750mm o.c.

NOTES:

1) In case of discrepancy between plant numbers on this list and on the plan, the latter shall prevail.
2) All planting shall be in accordance with BC Landscape Standard, latest edition and as specified.
3) All planting beds to be mulched with 2" (50mm) of Answer Garden Products 'Humus builder'.
4) Species for salt marsh shall be harvested in a sustainable manner.
5) Final placement of plant material to be approved by Consultant prior to planting.
6) Substitutions shall be approved by Consultant prior to harvesting or growing.

SALT MARSH HARVESTING AND TRANSPLANTING

The compensation marsh is roughly 7,000 M2, requiring approximately 12,000 marsh plugs spaced 750mm o.c.

The salt marsh areas will be comprised of 70% donor material and 30% nursery grown stock, depending on availability of suitable donor material. Donor plant material will consist of the following native salt marsh species: Pickleweed (Salicorna virginica), Seashore Salt Grass (Distichlis spicata), and Seaside Arrowgrass (Triglochin maritima) Seacoast Bulrush (Bolboschoenus (Scirpus) maritimus), and Three-Square Bulrush (Schoenoplectus (Scirpus) americanus) . Other associated species such as Gumweed (Grindelia integrifolia), Seaside Plantago (Plantago maritima), Baltic Rush (Juncus balticus) may also be taken up to 10% of the total plants if available and growing in the appropriate elevation range.

NOTES:

1. REFER TO DRAWINGS 34-291-564 FOR PLANT SPECIES, SIZES, AND QUANTITIES.

2. REFER TO ENGINEERING DRAWINGS FOR ALL NON-LANDSCAPE WORK.

10m 0m 10m 20m

SCALE: 1: 500

PRELIMINARY
NOT FOR CONSTRUCTION

Ref.No.	REFERENCE

KLOHN CRIPPEN

IN ASSOCIATION WITH:

Moffatt & Nichol

GL Williams & Associates Ltd.

SHARP & DIAMOND Landscape Architecture Inc

No.	Date	REVISION	Dr'n	Ch'd
P1	APR. 7/09	ISSUED FOR TENDER	PCH	KL

VFPA

VANCOUVER FRASER PORT AUTHORITY
ENGINEERING DEPARTMENT

DESIGN BY	KL/PCH (SD)
DRAWN BY	PCH (SD)
APPROVED	
DATE	AUG 17/2007
SCALE	AS SHOWN
VPA SITE	

ROBERTS BANK
EAST CAUSEWAY HABITAT COMPENSATION
LANDSCAPE PLAN
SHEET 4

SIZE	DWG.	SHEET	REV.
D	34-291-564	4 of 6	P1

TITLE BLOCK: DL-TB.dwg

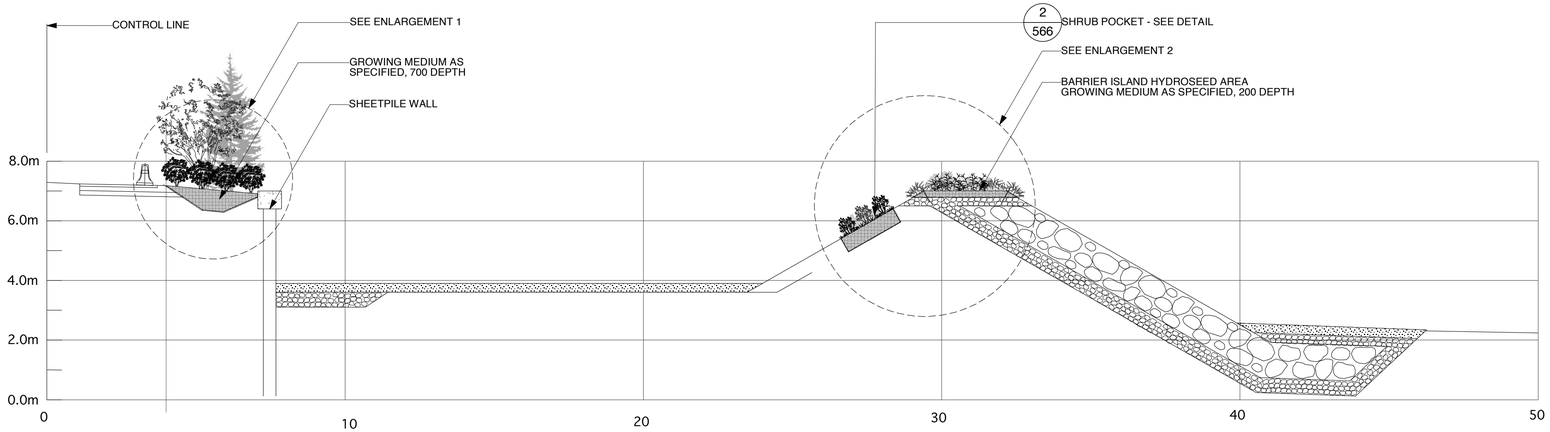

1 SECTION A
Scale: 1:100

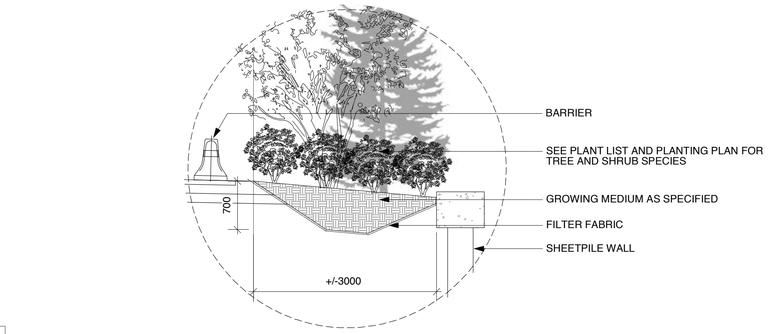

3 ENLARGEMENT 1

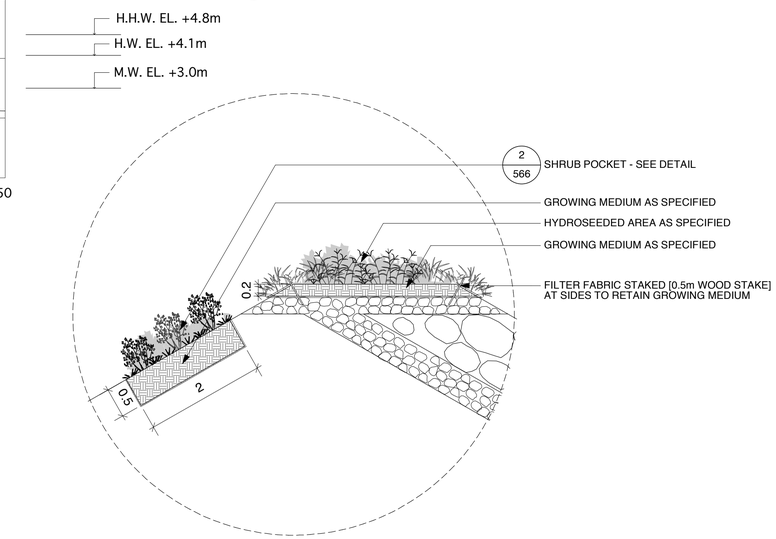

4 ENLARGEMENT 2

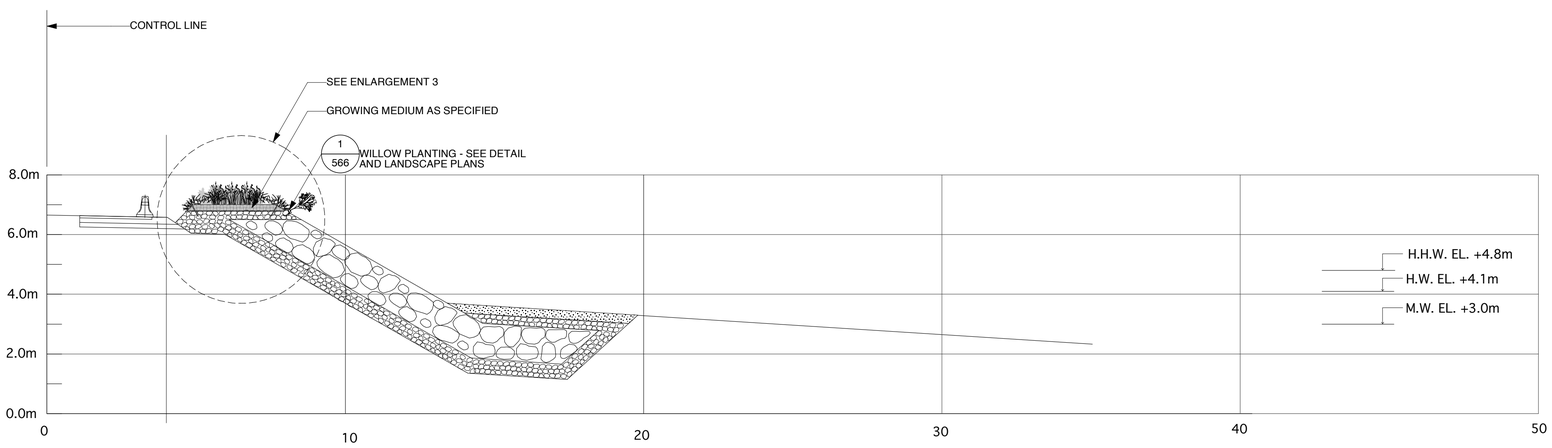

2 SECTION B
Scale: 1:100

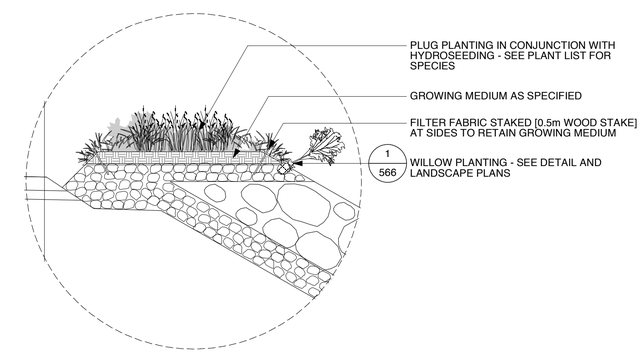

5 ENLARGEMENT 3

PRELIMINARY
NOT FOR CONSTRUCTION

Ref.No.	REFERENCE

KLOHN CRIPPEN

IN ASSOCIATION WITH:

Moffatt & Nichol

GL Williams & Associates Ltd.

SHARP & DIAMOND
Landscape Architecture Inc

No.	Date	REVISION	Dr'n	Ch'd
P1	APR. 7/09	ISSUED FOR TENDER	PCH	KL

VFPA

VANCOUVER FRASER PORT AUTHORITY
ENGINEERING DEPARTMENT

DESIGN BY	KL/PCH (SD)
DRAWN BY	PCH (SD)
APPROVED	
DATE	AUG 17/2007
SCALE	AS SHOWN
VPA SITE	

ROBERTS BANK
EAST CAUSEWAY HABITAT COMPENSATION
LANDSCAPE SECTIONS + DETAILS
SHEET 1

SIZE	DWG.	SHEET	REV.
D	34-291-565	5 of 6	P1

TITLE BLOCK: DA-TB.dwg

TITLE BLOCK: DL-TB.dwg

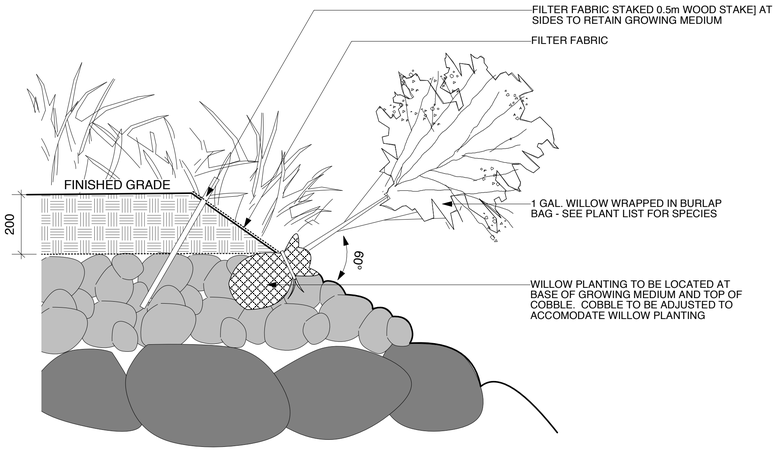

1 WILLOW PLANTINGS IN FILTER STONE
Scale 1:10

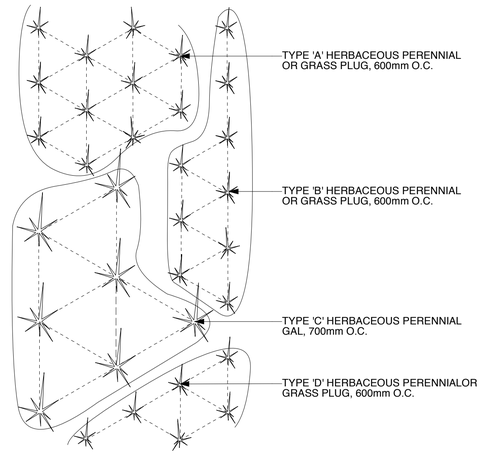

NOTE:
HERBACEOUS PERENNIAL & GRASS PLUGS AND GALLON POTS SHALL BE IN SPECIES GROUPINGS OF MINIMUM 5 AND MAXIMUM 12, IN THE PERCENTAGES AND QUANTITIES SHOWN ON THE PLANTING PLAN.

3 TYPICAL PERENNIAL AND GRASS PLUG LAYOUT
Scale 1:25

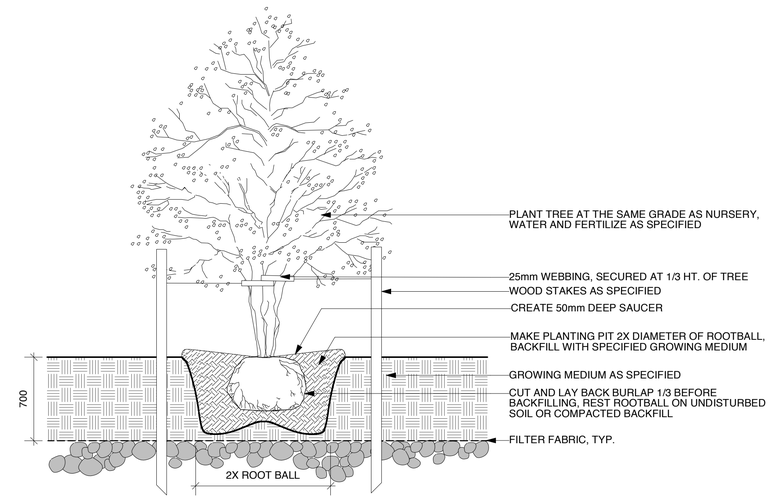

5 TYPICAL DECIDUOUS TREE PLANTING
Scale 1:25

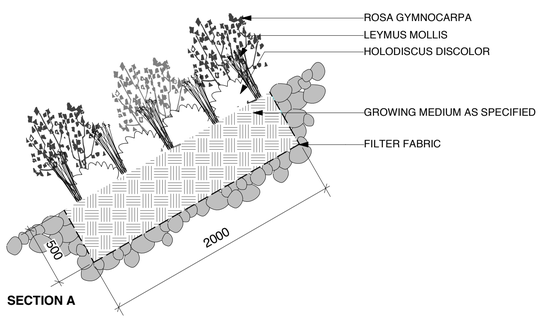

SECTION A

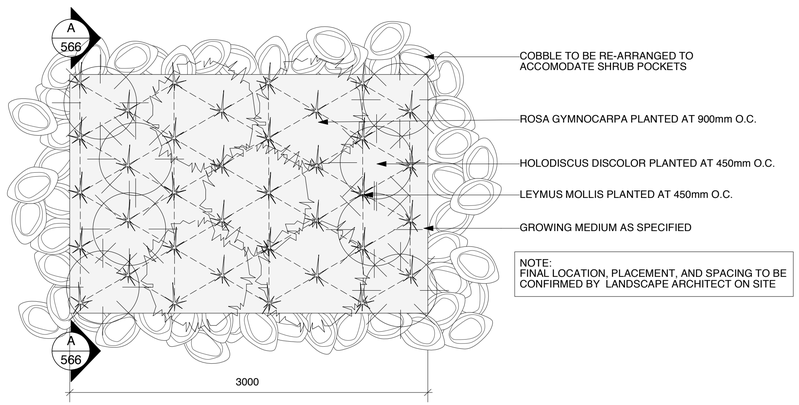

NOTE:
FINAL LOCATION, PLACEMENT, AND SPACING TO BE CONFIRMED BY LANDSCAPE ARCHITECT ON SITE

2 TYPICAL SHRUB POCKET
Scale 1:25

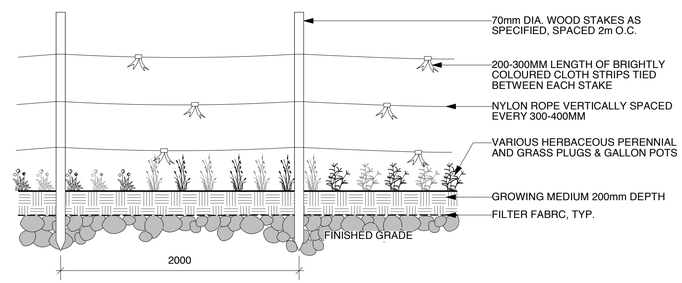

NOTE:
WATERFOWL PROTECTION FENCE TO BE LOCATED WHEREVER HERBACEOUS PLANT MATERIAL IS INSTALLED INCLUDING BUT NOT LIMITED TO SALT MARSH PLANTINGS, PLUG & SEEDMIX AREAS ALONG THE ROADWAY, AND BARRIER ISALND HYDROSEEDING. THE FENCING SHALL BE KEPT IN GOOD CONDITION AND REMAIN IN PLACE UNTIL THE PLANT MATERIAL IS ESTABLISHED (1 YEAR)

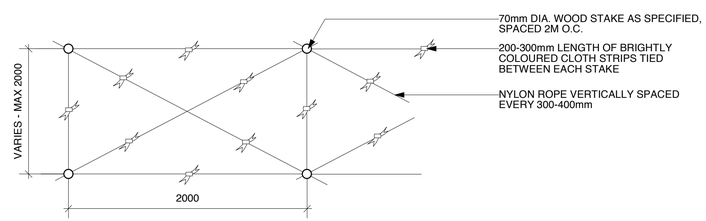

4 WATERFOWL PROTECTION FENCE
Scale 1:25

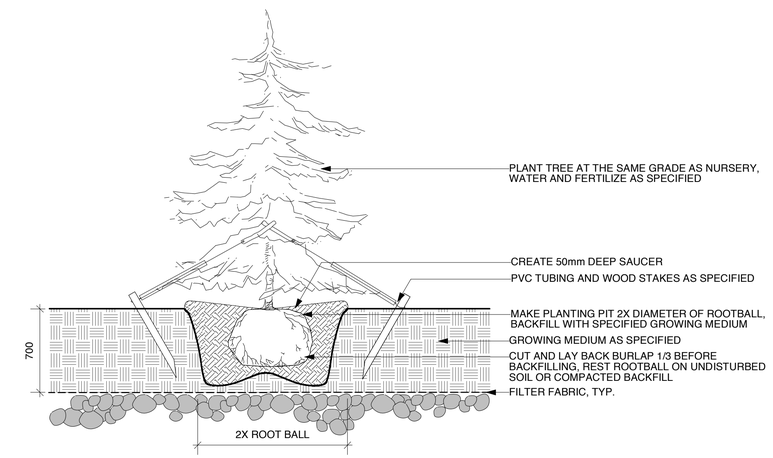

6 TYPICAL CONIFEROUS TREE PLANTING
Scale 1:25

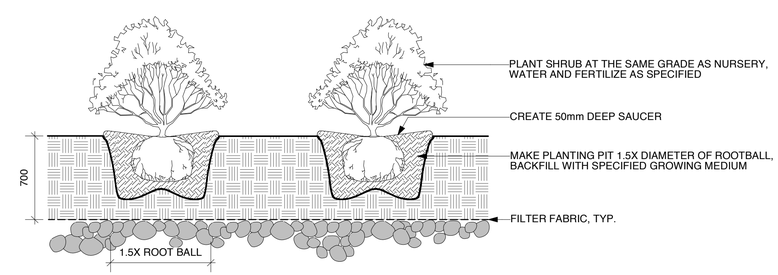

7 TYPICAL SHRUB PLANTING
Scale 1:25

PRELIMINARY
NOT FOR CONSTRUCTION

Ref.No.	REFERENCE

KLOHN CRIPPEN

IN ASSOCIATION WITH:

Moffatt & Nichol

GL Williams & Associates Ltd.

SHARP & DIAMOND Landscape Architecture Inc

No.	Date	REVISION	Dr'n	Ch'd
P1	APR. 7/09	ISSUED FOR TENDER	PCH	KL

VFPA

VANCOUVER FRASER PORT AUTHORITY
ENGINEERING DEPARTMENT

DESIGN BY	KL (SD)
DRAWN BY	PCH (SD)
APPROVED	
DATE	AUG 17/2007
SCALE	AS SHOWN
VPA SITE	

ROBERTS BANK
EAST CAUSEWAY HABITAT COMPENSATION
LANDSCAPE SECTIONS + DETAILS
SHEET 2

SIZE	DWG.	SHEET	REV.
D	34-291-566	6 of 6	P1

ATTACHMENT 4: SPILL REPORTING REGULATION

B.C. Reg. 263/90 Deposited August 10, 19

O.C. 1223/90

Environmental Management Act

SPILL REPORTING REGULATION

[includes amendments up to B.C. Reg. 376/2008, December 9, 2008]

Contents

Interpretation

1 In this regulation:

"Act" means the *Environmental Management Act*;

"PEP" means the Provincial Emergency Program continued under the *Emergency Program Act*;

"spill" means a release or discharge into the environment, not authorized under the Act, of a substance in an amount equal to or greater than the amount listed in Column 2 of the Schedule opposite that substance in Column 1;

"substance" means a substance, product, material or other thing listed in Column 1 of the Schedule to this regulation.

[am. B.C. Regs. 321/2004, s. 28 (a) and (b); 220/2006, Sch. s. 3.]

Report

2 (1) For the purposes of section 79 (5) of the Act, a person who had possession, charge or control of a substance immediately before its spill shall immediately report the spill to PEP by telephoning 1-800-663-3456.

(2) Where it appears to a person observing a spill that a report under subsection (1) has not been made, he or she shall make the report referred to in this section.

(3) A report under this section shall include, to the extent practical,

(a) the reporting person's name and telephone number,

(b) the name and telephone number of the person who caused the

spill,

(c) the location and time of the spill,

(d) the type and quantity of the substance spilled,

(e) the cause and effect of the spill,

(f) details of action taken or proposed to comply with section 3,

(g) a description of the spill location and of the area surrounding the spill,

(h) the details of further action contemplated or required,

(i) the names of agencies on the scene, and

(j) the names of other persons or agencies advised concerning the spill.

[am. B.C. Reg. 220/2006, Sch. s. 4.]

Further action

3 Where a spill occurs, the person who immediately before the spill had possession, charge or control of the spilled substance shall take all reasonable and practical action, having due regard for the safety of the public and of himself or herself, to stop, contain and minimize the effects of the spill.

Schedule

[en. B.C. Reg.376/2008.]

Reportable Levels for Certain Substances

1 In this Schedule:

"Federal Regulations" means the Transportation of Dangerous Goods Regulations made under the *Transportation of Dangerous Goods Act* (Canada);

"Hazardous Waste Regulation" means B.C. Reg. 63/88.

Item	Column 1 Substance spilled	Column 2 Specified amount
1	Class 1, Explosives as defined in section 2.9 of the Federal Regulations	Any quantity that could pose a danger to public safety or 50 kg
2	Class 2.1, Flammable Gases, other than natural gas, as defined in section 2.14 (a) of the Federal Regulations	10 kg
3	Class 2.2 Non-Flammable and Non-Toxic Gases as defined in section 2.14 (b) of the Federal Regulations	10 kg

4	Class 2.3, Toxic Gases as defined in section 2.14 (c) of the Federal Regulations	5 kg
5	Class 3, Flammable Liquids as defined in section 2.18 of the Federal Regulations	100 L
6	Class 4, Flammable Solids as defined in section 2.20 of the Federal Regulations	25 kg
7	Class 5.1, Oxidizing Substances as defined in section 2.24 (a) of the Federal Regulations	50 kg or 50 L
8	Class 5.2, Organic Peroxides as defined in section 2.24 (b) of the Federal Regulations	1 kg or 1 L
9	Class 6.1, Toxic Substances as defined in section 2.27 (a) of the Federal Regulations	5 kg or 5 L
10	Class 6.2, Infectious Substances as defined in section 2.27 (b) of the Federal Regulations	1 kg or 1 L, or less if the waste poses a danger to public safety or the environment
11	Class 7, Radioactive Materials as defined in section 2.37 of the Federal Regulations	Any quantity that could pose a danger to public safety and an emission level greater than the emission level established in section 20 of the "Packaging and Transport of Nuclear Substances Regulations"
12	Class 8, Corrosives as defined in section 2.40 of the Federal Regulations	5 kg or 5 L
13	Class 9, Miscellaneous Products, Substances or Organisms as defined in section 2.43 of the Federal Regulations	25 kg or 25 L
14	waste containing dioxin as defined in section 1 of the Hazardous Waste Regulation	1 kg or 1 L, or less if the waste poses a danger to public safety or the environment
15	leachable toxic waste as defined in section 1 of the Hazardous Waste Regulation	25 kg or 25 L
16	waste containing polycyclic aromatic hydrocarbons as defined in section 1 of the hazardous Waste Regulation	5 kg or 5 L
17	waste asbestos as defined in section 1 of the Hazardous Waste Regulation	50 kg
18	waste oil as defined in section 1 of the Hazardous Waste Regulation	100 L
19	waste containing a pest control product as defined in section 1 of the Hazardous Waste Regulation	5 kg or 5 L
20	PCB Wastes as defined in section 1 of the Hazardous Waste Regulation	25 kg or 25 L

21	waste containing tetrachloroethylene as defined in section 1 of the Hazardous Waste Regulation	50 kg or 50 L
22	biomedical waste as defined in section 1 of the Hazardous Waste Regulation	1 kg or 1 L, or less if the waste poses a danger to public safety or the environment
23	A hazardous waste as defined in section 1 of the Hazardous Waste Regulation and not covered under items 1 – 22	25 kg or 25 L
24	A substance, not covered by items 1 to 23, that can cause pollution	200 kg or 200 L
25	Natural gas	10 kg, if there is a breakage in a pipeline or fitting operated above 100 psi that results in a sudden and uncontrolled release of natural gas

[Provisions of the *Environmental Management Act*, S.B.C. 2003, c. 53, relevant to the enactment of this regulation: sections 53, 79 (5) and 92]

PROVINCE OF BRITISH COLUMBIA

ORDER OF THE LIEUTENANT GOVERNOR IN COUNCIL

Order in Council No. 902 *, Approved and Ordered* DEC - 8 2008

Lieutenant Governor

Executive Council Chambers, Victoria

On the recommendation of the undersigned, the Lieutenant Governor, by and with the advice and consent of the Executive Council, orders that the Schedule to the Spill Reporting Regulation, B.C. Reg. 263/90, is repealed and the attached Schedule is substituted.

Minister of Environment

Presiding Member of the Executive Council

(This part is for administrative purposes only and is not part of the Order.)

Authority under which Order is made:

Act and section: *Environmental Management Act*, S.B.C. 2003, c. 53, s. 79 (5) and 92

Other (specify): OIC 1223/90

July 23, 2008 R/744/2008/33

Schedule
Reportable Levels for Certain Substances

1 In this Schedule:

"Federal Regulations" means the Transportation of Dangerous Goods Regulations made under the Transportation of Dangerous Goods Act (Canada);

"Hazardous Waste Regulation" means B.C. Reg. 63/88.

Item	Column 1 Substance spilled	Column 2 Specified amount
1	Class 1, Explosives as defined in section 2.9 of the Federal Regulations.	Any quantity that could pose a danger to public safety or 50 kg
2	Class 2.1, Flammable Gases, other than natural gas, as defined in section 2.14 (a) of the Federal Regulations	10 kg
3	Class 2.2 Non-Flammable and Non-Toxic Gases as defined in section 2.14 (b) of the Federal Regulations.	10 kg
4	Class 2.3, Toxic Gases as defined in section 2.14 (c) of the Federal Regulations.	5 kg
5	Class 3, Flammable Liquids as defined in section 2.18 of the Federal Regulations.	100 L
6	Class 4, Flammable Solids as defined in section 2.20 of the Federal Regulations.	25 kg
7	Class 5.1, Oxidizing Substances as defined in section 2.24 (a) of the Federal Regulations.	50 kg or 50 L
8	Class 5.2, Organic Peroxides as defined in section 2.24 (b) of the Federal Regulations.	1 kg or 1 L
9	Class 6.1, Toxic Substances as defined in section 2.27 (a) of the Federal Regulations.	5 kg or 5 L
10	Class 6.2, Infectious Substances as defined in section 2.27 (b) of the Federal Regulations.	1 kg or 1 L, or less if the waste poses a danger to public safety or the environment
11	Class 7, Radioactive Materials as defined in section 2.37 of the Federal Regulations.	Any quantity that could pose a danger to public safety and an emission level greater than the emission level established in section 20 of the "Packaging and Transport of Nuclear Substances Regulations"

12	Class 8, Corrosives as defined in section 2.40 of the Federal Regulations.	5 kg or 5 L
13	Class 9, Miscellaneous Products, Substances or Organisms as defined in section 2.43 of the Federal Regulations.	25 kg or 25 L
14	waste containing dioxin as defined in section 1 of the Hazardous Waste Regulation.	1 kg or 1 L, or less if the waste poses a danger to public safety or the environment
15	leachable toxic waste as defined in section 1 of the Hazardous Waste Regulation.	25 kg or 25 L
16	waste containing polycyclic aromatic hydrocarbons as defined in section 1 of the hazardous Waste Regulation.	5 kg or 5 L
17	waste asbestos as defined in section 1 of the Hazardous Waste Regulation.	50 kg
18	waste oil as defined in section 1 of the Hazardous Waste Regulation.	100 L
19	waste containing a pest control product as defined in section 1 of the Hazardous Waste Regulation.	5 kg or 5 L
20	PCB Wastes as defined in section 1 of the Hazardous Waste Regulation.	25 kg or 25 L
21	waste containing tetrachloroethylene as defined in section 1 of the Hazardous Waste Regulation.	50 kg or 50 L
22	biomedical waste as defined in section 1 of the Hazardous Waste Regulation.	1 kg or 1 L, or less if the waste poses a danger to public safety or the environment
23	A hazardous waste as defined in section 1 of the Hazardous Waste Regulation and not covered under sections 1 – 22.	25 kg or 25 L
24	A substance, not covered by items 1 to 23, that can cause pollution.	200 kg or 200 L
25	Natural gas	10 kg, if there is a breakage in a pipeline or fitting operated above 100 psi that results in a sudden and uncontrolled release of natural gas

ATTACHMENT 5: A Field Guide to Fuel Handling, Transportation & Storage (February 2002)

A Field Guide to Fuel Handling, Transportation & Storage

3rd Edition, February 2002

Ministry of Water, Land and Air Protection

INTRODUCTION

This document provides guidance on acceptable industry practice for managing fuel handling, transportation and storage in rural and remote areas of British Columbia. It summarizes requirements of applicable statutes of Canada and British Columbia, industry codes of practice and recommendations relating to environmental protection, health and safety, and fire protection.

This document provides general guidance; however, it is not intended to address every type of *fuel facility*. It is the responsibility of each commercial or industrial operator to implement the statutory requirements for which they are responsible.

While this document refers to legislation in effect on the date of publication and proposed legislation, users should always reference the current piece of legislation for accuracy of legal requirements.

To assist the user:
(1) terms or phrases that are defined in the Section 11. Glossary are italicized in the text of this document; and,

(2) legislated requirements and recommendations are separately highlighted throughout the document as follows:
- ■ Denotes statutory requirements of legal documents, such as the *BC Fire Code* and the *Transportation of Dangerous Goods Regulations*, with text references.
- ❑ Denotes recommended practices.

Nothing in this document should be construed as waiving compliance with any applicable statutory or other legal requirement.

ACKNOWLEDGMENTS

The Ministry of Water, Land and Air Protection and the Ministry of Forests acknowledge: Vern Atkinson, Regional Fire Commissioner, Victoria; Ray Hollenberg, NorthWest Response Ltd., Smithers; Bernard A. Bintner, Environmental Management Branch; and Canadian Forest Products Limited (CANFOR) for their contribution toward the development of this document.

TABLE OF CONTENTS

This guide is meant to assist field operators in reducing the risk and environmental impact where *flammable* or *combustible liquids* (See Section 11. Glossary.) are handled, transported and stored. It provides statutory requirements and recommended practices for preventing fires and enhancing health, safety and environmental protection.

Section 1. SMALL CONTAINERS = 230L – Canisters, Jerry Cans, Pails, Drums

Statutory Requirements & Recommended Practices
1.1 DESIGN (See definition of *small container* in Section 11. Glossary.) ■ Containers = 230L, used to store *flammable* or *combustible liquids* (e.g., gasoline & diesel fuel), must meet the appropriate design specification. (FC4.2.3.1.) ❑ Maintain containers in good condition – not damaged, rusting or leaking. ❑ Adequately seal containers with proper fitting lids, caps, bungs or valves to prevent spills and leaks.
1.2 OPERATIONS Spill control Note: *Secondary containment* is not required for individual *small containers* ■ *Spill control* is required for small *containers* of flammable and *combustible liquids* that have the potential to spill. (FC 4.1.6.) ❑ The degree of *spill control* should be based on the level of risk. (See Section 7. – Risk Assessment.) Safety Awareness ■ All fuel containers must be labelled in accordance with the Workplace Hazardous Materials Information System (WHMIS), and according to the *Fire Code.* (FC 4.2.3.2.) ■ Smoking is not permitted where dispensing is being carried out. (FC 4.1.5.4.) ■ One 20-B:C rated *fire extinguisher* or two 10-B:C rated *fire extinguisher*s are required where containers are stored within a building or structure. (FC 4.2.9.7. & FC 6.2.3.5.) ❑ Signs should be displayed where storage (e.g., *fuel cache*) or dispensing takes place. Dispensing ■ Maintenance and operating procedures shall be established to prevent spills. (FC 4.1.6.3.) ■ Containers must not be filled beyond their safe filling level. (FC 4.5.2.7.)

Bullets:	■ Statutory Requirements • ❑ Recommended Practices °	**Symbols:**	less than (**<**) greater than (**>**) equal to or less than (**=**) equal to or greater than (**>**)	**Abbreviations:**	meter (**m**) litre (**L**) kilogram (**Kg**)

Statutory Requirements & Recommended Practices

- ❑ Mark containers at a safe maximum fill level corresponding to approximately 90% capacity.
- ❑ Use an electric fuel pump when dispensing from a *drum.* When an electric fuel pump is not available or not practical, use a manual pump. Always store and secure the fuel hose above the *drum* to prevent siphoning.
- ❑ Ensure that dispensing procedures are clearly outlined and posted where all operators can see them.
- ❑ Keep the *drum* upright; avoid dispensing from a horizontal *drum.*
- ❑ Ensure housekeeping is effective in maintaining a clean and tidy facility.

Emergency Response

- ■ Spills of TDG Class 3 – *flammable liquids* ≥ 100L must be reported to the Provincial Emergency Program (PEP) telephone **1-800-663-3456**). (WMA, *Spill Reporting Regulation* – see definition of TDG Class 3 *flammable liquids* in Section 11. Glossary.)
- ■ Ensure that spills are recovered and that all contaminated soil is removed or treated. (FC 4.1.6.3.)
- ❑ Post initial spill response procedures with truck or *fuel cache*. (See Section 9. –Spill Response.)
- ❑ Maintain a spill response plan and a kit capable of containing and absorbing fuel spills. (See Section 9.3. – Spill Response Equipment.)

Remote Storage Locations

- ❑ Forestry landings must not be closer than 30 m to a stream to ensure that the landing provides sufficient buffer for sediment, ash and fuel spill infiltration. (FPC – Community Watershed Guidebook 4, Section 6.4.1)
- ❑ Assess and manage the risk potential at all remote *fuel cache* locations. (See Section 7. – Risk assessment.)
- ❑ Ensure all empty containers are removed from remote locations and returned for refilling or recycling.

1.3 TRANSPORTATION

Note: TDG documentation is not required when the total fuel capacity of all the containers on the vehicle is = 2000L. (TDG 2.31)

Load Security

- ■ No person shall drive or operate on a highway a vehicle carrying a load unless the load is secured in a manner which ensures that:
  - the load will not escape from the vehicle
  - the load will not shift or sway in a manner that may affect the operation of the vehicle. (MVA Division 35.03)

Bullets:	■ Statutory Requirements • ❑ Recommended Practices °	**Symbols:**	less than (**<**) greater than (**>**) equal to or less than (**=**) equal to or greater than (**≥**)	**Abbreviations:**	meter (**m**) litre (**L**) kilogram (**Kg**)

Statutory Requirements & Recommended Practices

■ No person shall drive or operate a commercial vehicle on highway while the vehicle is carrying *drums* or barrels on end unless:
- where metal *drums* or barrels are stacked on end, or on other metal *drums* or barrels, the stacks are separated by *dunnage*; and,
- the vehicle has sides, sideboards or side stakes and the *drums* or barrels are blocked or tied down with hardware adequate to prevent the load from shifting on the vehicle. (MVA 35.08)

■ Tie Downs must:
- have a safe working load of not more than the weight of the load secured by the tie downs
- be marked directly, or on a tag permanently attached, with:
  (a) the safe working load as warranted by the manufacturer or by a registered professional engineer, or
  (b) sufficient information so as to enable a peace officer to determine the manufacturer, grade and quality of the tied down. (MVA 35.08)
- not to be used if worn:
  (a) beyond a wear limitation specified by the manufacturer, or
  (b) to the extent that they have become unsafe
- when in use be protected as necessary against abrasion
- when in use have any load binder handle that forms part of the tie down assembly locked in place and secured by rope, wire or chain or a locking mechanism that restricts any movement of the handle, and

be designed, constructed and maintained so that the driver of a vehicle can tighten them, unless the tied down consists of steel, fibre or synthetic strapping, if the strapping is taut when in use.(MVA 35.12)

1.4 DOCUMENTATION & TRAINING

Inspection

■ All sites that require cleanup of contaminated soil must follow the WMA, *Contaminated Sites Regulation*. (Section 8. Treating Hydrocarbon Contaminated Soils.)

❑ Inspect the storage and dispensing area and document the inspections to ensure the operations are in accordance with this guide.

❑ Develop an action plan to address potential liabilities and to upgrade facilities or practices that do not meet the industrial standards identified in this guide.

❑ Do not attempt a site cleanup unless you are familiar with the WMA, *Contaminated Sites Regulation.* (See Section 8. – Treating Hydrocarbon Contaminated Soils.)

❑ Document any site clean-up with photos, written notes and samples.

Training

Note: TDG training is not required when the total fuel capacity of all the containers on the vehicle is = 2000 L. (TDG 2.31)

❑ TDG training and spill response training is recommended for anyone transporting *small containers.*

Bullets: ■ Statutory Requirements • ❑ Recommended Practices °

Symbols: less than (**<**) greater than (**>**) equal to or less than (**=**) equal to or greater than (**>**)

Abbreviations: meter (**m**) litre (**L**) kilogram (**Kg**)

Statutory Requirements & Recommended Practices
❑ Ensure all operators have been given some awareness training in fuel handling, storage and dispensing procedures for *small containers.*
❑ Review *risk assessment* and spill response procedures with employees.

Bullets:	■ Statutory Requirements • ❑ Recommended Practices °	**Symbols:**	less than (**<**) greater than (**>**) equal to or less than (**=**) equal to or greater than (**>**)	**Abbreviations:**	meter (**m**) litre (**L**) kilogram (**Kg**)

Section 2. SMALL TDG TANKS ≤ 454L – Truck-Box Fuel Tanks

Statutory Requirements & Recommended Practices

2.1 DESIGN

(See definition of *small TDG tank* in Section 11. Glossary.)

- ■ All small tanks ≤ 454L must be designed, constructed, filled and closed so that, under normal conditions of handling and transport, there will be no discharge, emission or escape of the dangerous goods from the container that could constitute a danger to public safety. (TDG 7.21.)
- ■ All small TDG tanks must meet the UN31 standard for *flammable or combustible* liquids on January 1, 2003.

Tanks Used to Transport Diesel Fuel and other *Combustible liquids*

(Note: For FC and TDG definitions of *flammable liquids* and *combustible liquids*, see Section 11. Glossary.)

- ■ Small TDG tanks (≤ 454L) used for *combustible liquids* that are constructed to a non-specified standard but meet the intent of TDG Section 7.21 (See 2.1 Design above.) will be acceptable. (Note: This remains in the proposed amendment to the TDG Regulation.)

Tanks Used to Transport Gasoline and other *Flammable* Liquids

- ■ Small TDG tanks (≤ 454L) used for *flammable liquids* that are constructed to a non-specified standard but meet the intent of TDG Section 7.21 (see Design above) may be used until January 1, 2003. Note:
  - A non-*specified tank* manufactured before 1996 (with visible data plate or date stamp) with a capacity = 454L, that meets the criteria in TDG Section 7.21, is a permitted substitute for gasoline fuel until January 1, 2003.
  - A TC57 *portable tank* is a permitted substitute for gasoline fuel.
  - A ULC/ORD 142.13 specified mobile refuelling tank manufactured before January 1, 2003, with a capacity = 454L may be used as a permitted substitute for gasoline until January 1, 2010. (TDG)

2.2 OPERATIONS

Spill Control & Secondary Containment

Note: *Secondary containment* is not required for *truck-box fuel tanks* where the tank is mounted or built as an integral part of the vehicle.

- ■ *Secondary containment* is required for any *truck-box fuel tank* that is > 230L and removed from the truck, trailer or mobile unit and operated in a *fixed location* for any length of time. (FC 4.3.7.1.)
- ❑ The degree of *spill control* should be based on the level of risk. (See Section 7. Risk assessment.)

Safety Awareness

- ■ A *truck-box fuel tank* must be labelled with a *flammable/combustible* sticker or placard so that it is visible from outside the truck. (FC 4.2.3.2 & TDG Part 5.1.2 & TDG Part 5.7)
- ❑ Take appropriate measures against static charge build-up when transferring *flammable liquids* or *combustible liquids* in trucks with plastic box liners or rubber mats.

Bullets:	■ Statutory Requirements • ❑ Recommended Practices °	**Symbols:**	less than (**<**) greater than (**>**) equal to or less than (**=**) equal to or greater than (**≥**)	**Abbreviations:**	meter (**m**) litre (**L**) kilogram (**Kg**)

Statutory Requirements & Recommended Practices

- ■ Tanks must not be filled beyond their safe filling level. (FC 4.5.2.7.)
- ■ Any vehicle fitted with a portable fuel tank is required to have at least one 20-B:C rated portable *fire extinguisher* or two 10-B:C rated portable *fire extinguisher*s are within 9m of the *truck-box fuel tank*. (FC 4.11.2.1.)
- ❑ Signs, indicating that the ignition must be turned off and smoking is not permitted while the vehicle is being refuelled must be visible to every driver approaching the dispenser.
- ❑ Do not fill beyond a safe-filling level corresponding to 90% capacity.

Dispensing

- ■ When dispensing *flammable liquids*, ensure that static electrical charges are controlled by establishing an electrical connection between the tank or container and truck box fill stem, or by providing other appropriate measures as applicable. (FC 4.1.8.2. FC Appendix A-4.1.8.2.(1)(b))
- ■ Hose nozzle valves must conform to CAN/ULC-S620-M, "Hose Nozzle Valves for *Flammable* and *Combustible Liquids*" (FC 4.5.5.2.)
- ■ An automatic shut-off nozzle must be used when using an integral hold-open device. (FC 4.5.5.2.)
- ■ When a hose nozzle valve with a hold-open device is used, a break-away coupling conforming to CAN/ULC-S644-M, "Emergency Break-away Fittings for *Flammable* and *Combustible Liquids*" shall be provided. (FC 4.5.5.2.)
- ■ Do not use any object or device to maintain the flow of fuel that is not an integral part of the hose nozzle valve assembly. (FC 4.5.8.6.)
- ■ Use only manufacturer's specified pressure relief security caps. (FC 4.2.3.1.)
- ■ Use fuel dispensing pumps conforming to good engineering practice, and designed for *flammable* or *combustible liquids* (See Section 10 – Statutes, Industry Standards & Codes of Practice – Office of the Fire Commissioner, Interpretation Bulletin No. IB 016, Pumps for Transferring Flammable or Combustible Liquids.)
- ■ Do not fuel or service equipment within a riparian management area of a stream or wetland, or within 30m of a lakeshore identified in an operational plan, unless (i) the equipment is hand held, or (ii) the fuelling or servicing is required for carrying out fire fighting activities, required to move broken down equipment, or authorized by the district manager. (FPC, *Timber Harvesting Practices Regulation* 24 (3); *Range Practices Regulation* 6 (3); *Forest Road Regulation* Part 3, 12 (1)(f) & (m))
- ■ Operators should minimize the potential for overfilling a *truck-box fuel tank* by providing continuously supervised filling operations using suitably qualified personnel. (FC 4.3.1.8)
- ❑ Hoses and nozzles used for dispensing fuel should be maintained in good repair.
- ❑ Use nozzles that must be kept open by continuous application of manual pressure.

Statutory Requirements & Recommended Practices

- ❑ Secure nozzles in the back of pickup trucks with some means of drip containment.
- ❑ Do not use hand pumps where power is available.
- ❑ Ensure that all dispensing procedures are made available to operators.

Emergency Response

- ■ Spills of TDG Class 3 – *flammable liquids* ≥ 100L must be reported to the Provincial Emergency Program (PEP) telephone **1-800-663-3456**). (WMA, *Spill Reporting Regulation* – see definition of TDG Class 3 *flammable liquids* in Section 11. Glossary.)
- ■ Ensure that spills are recovered and that all contaminated soil is removed or treated. (FC 4.1.6.3.)
- ■ All vehicles transporting fuel must have a spill response kit capable of containing and absorbing fuel spills. (FC 4.1.6.3.)
- ❑ Provide spill response procedures and a current spill response plan with the vehicle.
- ❑ Maintain a spill response kit, capable of containing and absorbing fuel spills, with the vehicle. (See Section 9. 3. Spill Response Equipment.)

2.3 TRANSPORTATION

Load Security

- ■ No person shall drive or operate on a highway a vehicle carrying a load unless the load is secured in a manner which ensures that:
  - the load will not escape from the vehicle
  - the load will not shift or sway in a manner that may affect the operation of the vehicle. (MVA Division 35.03)
- ❑ Tanks should be placed on plywood or equivalent material to prevent the tank from rubbing on the truck box platform.

2.4 DOCUMENTATION & TRAINING

Inspection

- ■ All sites that require cleanup of contaminated soil must follow the WMA, *Contaminated Sites Regulation*. (Section 8. Treating Hydrocarbon Contaminated Soils.)
- ❑ Ensure that drips and leaks are routinely cleaned so that the truck box remains clean.

Training

- ❑ TDG training and Spill Response training is recommended for anyone transporting fuel using a *truck-box fuel tank*.

Statutory Requirements & Recommended Practices
❑ Review *risk assessment* and spill response procedures with employees. (See Sections 7. Risk assessment & 9. Spill Response.)

Bullets:	■ Statutory Requirements • ❑ Recommended Practices °	**Symbols:**	less than (**<**) greater than (**>**) equal to or less than (**=**) equal to or greater than (**≥**)	**Abbreviations:**	meter (**m**) litre (**L**) kilogram (**Kg**)

Section 3. LARGE TDG TANKS > 454L – Tank Vehicles

This section deals with *tank vehicles* used as temporary fuelling facilities that are intended to be mobile.

Statutory Requirements & Recommended Practices

3.1 DESIGN

Tank Trucks

- ■ The tank truck must be certified to the current CSA B620-1987/TC306 standard. If the proposed CSA B620-98/TC406 standard is adopted into the TDG Regulations, upgrades will not be required as long as it continues to pass inspections. (TDG)

- ■ The current inspection requirements for tank trucks include:
  - inspection by a facility that is registered by Transport Canada
  - visual inspections every two 2 years and pressure testing is required every 5 years;
  - under the proposed CSA B620-98 standard visual inspections and a leak test will be required every (1) year and an internal inspection and pressure test will be required every five (5) years. (TDG)

- ■ A tank truck that does not meet the current CSA B620-1987/TC306 standard may be certified under a "grandfather clause" or equivalence clause if it meets the intent of the CSA B620 standard. (TDG 7.33.1): This certification is valid only until January 1, 2005. After this date the tank must be disposed of or upgraded to meet the CSA B620-98/TC406 standard. Only a Certified Transport Canada Inspector can certify the tank under the "grandfather clause". (TDG)

- ❑ Ensure that all trucks used to transport fuel tanks meet commercial vehicle inspection requirements.
  - ◦ Inspection may not be required in some remote locations where the trucks are not used on public roads; however, commitment to inspection is recommended to provide assurance that the trucks meet an industrial standard for safety and performance.

Trailers & Semi-Trailers

- ■ On January 1, 2003 all large TDG tanks >454 L must meet UN31A or UN31B standard for *flammable* or *combustible liquids.*

- ■ For specified manufactured fuel tanks:
  a ULC/ORD standard 142.13 Mobile Refuelling Tank and a TC Standard 57 *Portable tank* are acceptable substitutes for transporting *flammable liquids* or *combustible liquids*;
  - a ULC/ORD standard 142.13 Mobile Refuelling Tank may be used until January 1, 2010 only if it was manufactured before January 1, 2003. (ULC)

- ■ For non-specified manufactured fuel tanks, the following interim requirements must be met:
  - non-specified fuel tanks (of any size) may be used to transport combustible liquid (e.g., diesel fuels) until December 31, 2002 if it is "designed, constructed, filled and closed so that under normal conditions there will be no leakage that could endanger public safety"
  - a non-*specified tank* that is < 3000L, manufactured before July 1, 1996 and used for *flammable liquid* (e.g., gasoline) may be used if the tank is:

Bullets:	■ Statutory Requirements • ❑ Recommended Practices ◦	**Symbols:**	less than (**<**) greater than (**>**) equal to or less than (**=**) equal to or greater than (**>**)	**Abbreviations:**	meter (**m**) litre (**L**) kilogram (**Kg**)

Statutory Requirements & Recommended Practices

(a) "designed, constructed, filled and closed so that under normal conditions there will be no leakage that could endanger public safety", and
(b) leak-tested, inspected and date stamped every 30 months by a facility registered by Transport Canada. Note: If the fuel tank is used for *flammable liquids* (gasoline) and was manufactured on July 1, 1996 or later, it must satisfy UN 31A or UN 31B (CGSB 43.146 standard). (TDG)

- ❑ Ensure that all tank trucks, trailers and semi-trailers used to transport fuel tanks meet commercial vehicle inspection requirements.
  Note: Inspection may not be required in some remote locations where the trucks are not used on public roads; however, commitment to inspection is recommended to provide assurance that the trucks meet an industrial standard for safety and performance.

3.2 OPERATIONS

Spill Control & Secondary Containment

Note: *Spill control*, including *secondary containment*, is not required for *tank vehicles* where the tank is mounted or built as an integral part of the vehicle including tank trucks, trailers and semi-trailers.

- ■ A fuel *storage tank* > 230L requires *spill control* (or *secondary containment*) when it is removed from a mobile unit and installed in a *fixed location*. (FC 1.2.1.2.) (See Section 6. Secondary containment & Collision Protection.)
- ❑ Consider additional *spill control* for all fuel storage and dispensing units (including secondary containment systems) that operate in high-risk areas as determined by *risk assessment*. (See Section 7. Risk assessment.)

Safety Awareness

- ■ Signs, indicating that the ignition must be turned off and smoking is not permitted while the vehicle is being refuelled must be visible to every driver approaching the dispenser. (FC 4.5.8.8.)
- ■ Maintain at least one 20-B:C portable *fire extinguisher* with the *tank vehicle* (FC 4.11.2.1.)
- ■ During loading and unloading bulk fuel from a *tank vehicle*, measures shall be taken against static electrical charges. (FC 4.11.3.2.)
- ■ Ensure fuel storage is physically protected against collisions, including:
  - moving the *tank vehicle* (or mobile skid) to a safe location or place a barrier (i.e. a log or equivalent protection) between the traffic area and the tank. (FC 4.5.2.1. & FC 4.11.2.4.) (See Section 6. 5. – Collision Protection.)
- ■ Tanks must not be filled beyond their safe filling level. (FC 4.5.2.7.)
- ❑ When providing collision protection for fuel storage areas, consider selecting:
  - a site that is easily visible
  - a site that is way from traffic.

Statutory Requirements & Recommended Practices

Dispensing

- A *storage tank* shall be prevented from being overfilled by providing one or both of the following:
  - continuous supervision of the filling operations by personnel qualified to supervise such operations (FC4.3.1.8.)
  - an *overfill protection* device that meets the intent of ULC/ORD-C58.15, "*Overfill protection* Devices for Flammable Liquid *Storage Tanks*".

- Refuelling equipment from a *tank vehicle* is permitted if the following conditions are met:
  - only diesel fuel is dispensed into the fuel tanks (not gasoline)
  - the fuelling is conducted in connection with commercial or industrial operations
  - the fuelling is conducted outdoors on commercial or industrial establishments
  - the fuelling is conducted using approved hose-reel and automatic closing nozzles
  - appropriate training and equipment are supplied to deal with any incidental spillage. (FC 4.11.3.8.)

- Do not fuel or service equipment within a riparian management area of a stream or wetland, or within 30m of a lakeshore identified in an operational plan, unless (i) the equipment is hand held, or (ii) the fuelling or servicing is required for carrying out fire fighting activities, required to move broken down equipment, or authorized by the district manager. (FPC, *Timber Harvesting Practices Regulation* 24 (3); *Range Practices Regulation* 6 (3); *Forest Road Regulation* Part 3, 12 (1)(f) & (m))

- Do not use any object or device to maintain the flow of fuel, that is not an integral part of the hose nozzle valve assembly. (FC 4.5.8.6.)

- When a hose nozzle valve with a hold-open device is used, a break-away coupling conforming to CAN/ULC-S644-M, "Emergency Break-away Fittings for Flammable and *Combustible Liquids*" shall be provided. (FC 4.5.5.2.)

- Fuel hose length must not exceed 4.5m, or 6m where a retracting system is used. (FC 4.5.5.1.(2)(3) & FC 4.11.3.8)

- ❑ There should be no leaks from the valve or pipe system to the pump. Draw-off valves must be threaded at the discharge end or otherwise designed to provide a liquid-tight connection to the delivery hose.

- ❑ Post all fuel handling procedures.

- ❑ Operators should always stay with the nozzle while refuelling.

- ❑ Any delivery hose that has the potential to cause a spill, if it were pulled from the delivery pump or valve, should be fitted with a *breakaway valve*.

Statutory Requirements & Recommended Practices

- ❑ Gravity-feed systems are considered high-risk facilities and should be phased out as soon as possible. Additional control measures are strongly recommended to ensure:
  - ° the bottom-of-tank valve is protected
  - ° the dispensing hose will not be pulled from the bottom of the tank without a break-away valve
  - ° additional collision protection is installed to prevent the accidental contact with the tank
  - ° the tank cannot be overfilled
  - ° access to the top of the tank meets legal requirements
  - ° the volumes of fuel are recorded through a meter system.

- ❑ The use of automatic shut-off nozzles is recommended to discourage the use of devices to hold the nozzle valve assembly open while refuelling.

- ❑ Use fuel-dispensing pumps according to manufactures' specifications.

- ❑ Close and lock valves as required.

Emergency Response

- ■ Spills of TDG Class 3 – *flammable liquids* ≥ 100L must be reported to the Provincial Emergency Program (PEP) telephone **1-800-663-3456**). (WMA, *Spill Reporting Regulation* – see definition of TDG Class 3 *flammable liquids* in Section 11. Glossary.)

- ■ Ensure that spills are recovered and that contaminated soil is removed or treated. (FC 4.1.6.3.) (See Section 8. Treating Hydrocarbon Contaminated Soils.)

- ■ All vehicles used to transport fuel must have a spill response plan and spill response kit, capable of containing and absorbing fuel spills, . (FC 4.1.6.3.) (See Section 9. 4. & 9.5. Spill Response Equipment.)

- ❑ Post spill response procedures and maintain a spill response plan with the fuel system.

3.3 TRANSPORTATION

Load Security

- ■ No person shall drive or operate on a highway a vehicle carrying a load unless the load is secured in a manner which ensures that:
  - the load will not escape from the vehicle
  - the load will not shift or sway in a manner that may affect the operation of the vehicle. (MVA Division 35.03)

- ■ Appropriate placards must be visible on all four sides of any fuel truck or mobile refuelling trailer that is > 2000 L whether filled or empty. (TDG Part V)

Statutory Requirements & Recommended Practices

3.4 DOCUMENTATION & TRAINING

TDG Documentation

- ■ TDG documentation (TDG 2.31 & TDG4.8) is required when transporting more than 2000L of TDG Class 3 – flammable liquid. (See Section 11. – Glossary.) The shipping document must show:
  - document number and date
  - the name, address and signature of the shipper
  - the consignee's name and address and the carrier's name
  - fully trained-operator status
  - full description and total volume of dangerous good(s);
  - a 24 hour contact number
  - the type and number of placards, if required. (TDG Part V)
- ■ When transporting an empty tank, the shipping document must use the words: "Residue – Last Contained".
  - Tanks that are cleaned and *purged* do not require any documentation. (TDG 4.19)

Inspection

- ■ All sites that require cleanup of contaminated soil must follow the WMA, *Contaminated Sites Regulation*. (Section 8. Treating Hydrocarbon Contaminated Soils.)
- ■ Regular inspections must be conducted and documented to ensure that fuel trucks and mobile refuelling tanks meet all safety specifications. (TDG 7.33.1)
- ❑ Inspections should be documented and inspection reports kept on file.

Training and Signage

- ■ Post clearly legible operating instructions at card or key activated dispensers. (FC 4.5.8.4. & FC 4.5.8.8.)
- ■ Emergency instructions must be conspicuously posted. (FC 4.1.6.3.)
- ❑ Spill response training needs should be assessed and implemented annually.
- ❑ All drivers who transport bulk fuel should be trained through the Canadian Petroleum Producers Institute (CPPI) Drivers Certification Training and Transportation of Dangerous Goods certification course or equivalent.
- ❑ Only experienced drivers with a Transportation of Dangerous Goods (TDG) certificate and emergency response training (ERT) should transport bulk fuel.

Section 4. FIXED LOCATION ABOVEGROUND STORAGE TANKS (AST) > 230L

Statutory Requirements & Recommended Practices

4.1 DESIGN

- ■ All *storage tanks* for combustible and *flammable liquids* must be built and maintained in accordance with Underwriters Laboratories of Canada (ULC) tank specifications, and bear a current ULC certification plate or label. (FC 4.3.1.2.)
- ■ Where a *storage tank* > 230L is removed or abandoned, it is permitted to be reused for the storage of *flammable liquids* and *combustible liquids* only after having been refurbished and found to conform to one of the acceptable standards. (FC4.3.1.2 & FC4.10.4.2.)
- ■ Materials, systems, equipment and procedures not specifically described in the *Fire Code*, or that vary from the specific requirements of the *Fire Code*, or for which no recognized test procedure has been established, are permitted to be used if it can be shown that these alternatives are equivalent on the basis of tests, evaluations or past performance. (FC 1.1.2.1.)
- ■ All *aboveground storage tanks* must be installed on firm foundations designed to minimize uneven settling and corrosion, and to prevent the design stress of the tank from being exceeded. (FC 4.3.3.1.)
- ■ Multiple tanks must have a minimum 1m separation between them. (FC 4.3.2.2.)
- ■ Hose Nozzle valves must conform to CAN/ULC-S620-M, "Hose Nozzle Valves for Flammable and *Combustible Liquids*" (FC 4.5.5.2.)
- ■ When a hose nozzle valve with a hold-open device is used, a breakaway coupling conforming to CAN/ULC-S644-M, "Emergency Break-away Fittings for Flammable and *CombustibleLiquids*" shall be provided. (FC 4.5.5.2.)
- ■ Valves at the *storage tank* must be constructed of steel according to the *Fire Code*. (FC 4.3.6.2.(1))
- ❑ To ensure a tank meets a specified engineering standard, check for a current certification plate or label.
- ❑ Annual *risk assessments* should be conducted on all gravity-feed systems currently in operation and control measures implemented to reduce and manage the risk(s).
- ❑ Gravity-feed systems are considered high-risk facilities and should be phased out as soon as possible. Additional control measures are strongly recommended to ensure:
  - ° the bottom-of-tank valve is protected
  - ° the dispensing hose will not be pulled from the bottom of the tank without a break-away valve
  - ° additional collision protection is installed to prevent the accidental contact with the tank,
  - ° the tank cannot be overfilled
  - ° access to the top of the tank meets legal safety requirements
  - ° the volumes of fuel are recorded through a meter system
  - ° a record of daily inspections and recorded volumes.

Bullets:	■ Statutory Requirements •	**Symbols:**	less than (**<**)	**Abbreviations:**	meter (**m**)
	❑ Recommended Practices °		greater than (**>**)		litre (**L**)
			equal to or less than (**=**)		kilogram (**Kg**)
			equal to or greater than (**≥**)		

Statutory Requirements & Recommended Practices

Temporary-Out-Of-Service

- ■ *Aboveground storage tanks*, which will be out of service for a period not exceeding 180 days, must be isolated by closing and securely locking the necessary valves, or by capping the piping from the tank. (FC 4.10.2.2.)
- ■ If the tank contains flammable or *combustible liquids*, the liquid level in the tank must be measured and the readings compared at intervals not greater than one month. (FC 4.10.2.2.)
- ■ When an *aboveground storage tank* will be out of service for a period exceeding 180 days:
  - all liquid and vapour must be removed from the tank and its connected piping
  - the tank markings must clearly indicate that the tank is empty. (FC 4.10.2.2.)
- ❑ If the aboveground tank is on a cradle, so that the bottom of the tank is exposed, the bottom of the tank should be visually inspected and documented on a regular basis.
- ❑ Remote facilities, that are difficult or impossible to access on a monthly basis, should secured to prevent spills and contamination. This may include leak detection monitoring equipment with wireless communication alarms.

4.2 OPERATIONS

Spill Control & Secondary Containment

- ■ *Spill control* may include one or more of the following:
  - double-walled tank
  - tank-in-a-box system
  - a graded or sloped site capable of diverting and containing a spill and preventing spills from entering natural waterways, storm drains and sanitary sewers
  - a paved or concrete pad sloped so that water and spilled fuel is directed to an oil/water separator
  - a non-combustible barrier of sufficient height to contain the spill. (FC 4.1.6 & FC 4.3.7.)
- ■ *Secondary containment* areas must not be used for storage purposes. (FC 4.3.7.9.)
- ■ Tanks within the containment area must be on the ground, mounted on a skid or securely positioned on a cradle. The cradle or tank support shall have a fire-resistance rating of not less than 2 hours (i.e. steel). (FC 4.3.3.1.)
- ■ Precipitation must not be allowed to accumulate within the containment area. (FC 4.3.7.8.)

Safety Awareness

- ■ Signs, indicating that the ignition must be turned off, smoking is not permitted while the vehicle is being refuelled, and any other fuelling procedure, must be visible to every driver approaching the dispenser. (FC 4.5.8.8)

Statutory Requirements & Recommended Practices

- ■ At least 2 portable 20-B:C rated *fire extinguisher*s must be available within 9m of the work area. (FC 4.6.5.1 & FC 6.2.3.5.)
- ■ Establish proper bonding, grounding and isolation components for protection against static charges during loading of *tank vehicles* when transferring *flammable liquids* or *combustible liquids*. (FC 4.6.4.5.)
- ■ Ensure fuel *storage tank* is physically protected against collisions. (FC 4.5.2.1.(3))
- ❑ Tanks should be filled to an acceptable safe filling level corresponding to approximately 90% of capacity.

Dispensing

- ■ Fixed dispensers must be protected against collision damage by either:
  - a concrete island not less than 100mm high, or
  - guard rails. (FC 4.5.3.3.)
- ■ Fuel dispensing hose length must not exceed 4.5m, or 6m where a retracting system is used. (FC 4.5.5.1.(2)(3))
- ■ An automatic shut-off nozzle must be used when using an integral hold-open device. (FC 4.5.5.2.)
- ■ Do not use any object or device to maintain the flow of fuel that is not an integral part of the hose nozzle valve assembly. (FC 4.5.8.6.)
- ■ There must be no leaks from the valve or pipe system to the pump. Draw-off valves must be threaded at the discharge end or otherwise designed to provide a liquid-tight connection to the delivery hose. (FC 4.4.5.)
- ■ During loading and unloading bulk fuel from a *tank vehicle*, precautionary measures must be taken to prevent static electrical charges. (FC 4.11.3.2.)
- ❑ Ensure that all operators stay with the fuel nozzle while refuelling.
- ❑ Any delivery hose that has the potential to cause a spill, if it were pulled from the delivery pump or valve, should be fitted with a *breakaway valve*.
- ❑ The fuel dispensing hose should be stored inside the containment *berm* where applicable.
- ❑ The use of automatic shut-off nozzles with an integrated hold-open device is recommended to discourage the use of devices or objects to hold the nozzle valve assembly open while refuelling.
- ❑ The fuel dispensing hose should be stored inside the containment *berm* where applicable.
- ❑ Keep hoses off the ground and valves closed and locked when not in use.
- ❑ Always stay with fuel dispensing system while refuelling.

Statutory Requirements & Recommended Practices

- ❑ A hose retractor should be used to keep the hose off the ground when not in use.
- ❑ All pumps used to transfer fuel should conform to manufactures' specification.
- ❑ Use automatic shut-off nozzles.
- ❑ Nozzles should be equipped with some means of drip containment.

Pollution Prevention

- ■ *Storage tanks* must not be overfilled, and precautions must be taken to prevent overflow or spillage by providing continuous supervision of the filling operations by personnel qualified to supervise such operations (FC 4.5.8.6.)
- ❑ To help minimize spills while filling the tank, an over-fill spill box should be located around the fill stem pipe.

Emergency Response

- ■ A spill response kit capable of containing and absorbing fuel spills must be made available and maintained (FC 4.2.6.3) (See Section 9.3 spill Response Equipment.)
- ■ Ensure that spills are recovered and that contaminated soil is removed or treated. (FC 4.1.6.3.) (See Section 8. Treating Hydrocarbon Contaminated Soils.)
- ■ Spills of TDG Class 3 – *flammable liquids* ≥ 100L must be reported to the Provincial Emergency Program (PEP) telephone **1-800-663-3456**). (WMA, *Spill Reporting Regulation* – see definition of TDG Class 3 *flammable liquids* in Section 11. Glossary.)
- ❑ Post spill response procedures and maintain an emergency response manual with the *fuel facility*.

4.3 DOCUMENTATION & TRAINING

Inspection & Documentation

- ■ Visual inspections must be made daily and during each shift of the piping system, pumps and ancillary equipment for leaks spills and obvious abnormal conditions. Any leakage must be repaired immediately. (FC 4.4.11.5.)
- ■ At *fuel dispensing stations* where the tank is resting on the ground (and visual inspection beneath the tank is not possible) the measurement (by tank dip) and computation of any gain or loss of liquid shall be taken each day that the station is in operation. (FC 4.3.16.1.)

Statutory Requirements & Recommended Practices

- ■ All sites that require cleanup of contaminated soil must follow the WMA, *Contaminated Sites Regulation*. (Section 8. Treating Hydrocarbon Contaminated Soils.)
- ❑ Keep a record of all volumes before and after deliveries.

Training and Signage

- ■ Ensure that the training of and fuel dispensing attendants includes procedures for:
  - supervising the dispensing of flammable and *combustible liquids*
  - taking appropriate measures to prevent sources of ignition from creating a hazard at the dispensers
  - taking appropriate action in the event of a spill to reduce the risk of fire
  - shutting off the power to all dispensers in the event of a spill or fire. (FC 4.5.8.5., FC 4.5.8.6. & FC 4.4.11.2)
- ❑ Spill and fire-training requirements should be assessed and implemented annually.
- ❑ All drivers who transport bulk fuel should be trained through the Canadian Petroleum Producers Institute (CPPI) Drivers Certification Training and Transportation of Dangerous Goods certification or equivalent.

Section 5. MARINE FACILITIES – foreshore facilities, wharves, docks, floating structures, barges and boats

Statutory Requirements & Recommended Practices

5.1 DESIGN

- ■ All *aboveground storage tanks* for *combustible* and *flammable liquids* must be built and maintained in accordance with Underwriters Laboratories of Canada (ULC) tank specifications, and bear a current ULC certification plate or label. (FC 4.3.1.2.)
- ■ All *aboveground storage tanks* must be installed on firm foundations designed to prevent the allowable design stress of the tank from being exceeded, and to minimize corrosion and uneven settling. (FC 4.3.3.1.)
- ■ Refurbished *aboveground storage tanks* for *flammable* and *combustible liquids* must meet the standards specific in the *Fire Code* before reuse. (FC 4.3.1.2 & FC 4.10.4.2.)
- ■ All fuel facilities around marine facilities require additional control measures as outlined in
  - • Marine *Fuel dispensing Stations* (FC 4.5.6.6)
  - • Piers and Wharves. (FC 4.7).
- ❑ Implement the basic industrial standards provided *in B. C. Coastal Marine Facility and Operating Standards, Second Edition 1992*.
- ❑ Tanks on floating structures should have additional controls including:
  - ° Additional floatation to ensure buoyancy and stability of the floating structure
  - ° Additional log-boom protection to ensure protection against large irregular swells and wave action
  - ° Emergency shut off devices on the tank assembly
  - ° Pressure relief valves on the tank
  - ° A baffle system within tank to keep the product within the tank more stable
  - ° Sheer valves inside the tank
  - ° Anti-siphon valves for the tank.
- ❑ Fuel dispensing from tanks should be carried out from the tops of the tanks.
- ❑ All gravity-feed systems should be phased-out as a precaution against spills.
- ❑ An annual *risk assessment* should be conducted on all gravity-feed systems and measures implemented to reduce the risks.

Siting Requirements

- ■ *Storage tanks* at marine *fuel dispensing stations* must not be located closer than 4.5m horizontally from the normal annual high-water mark. (FC 4.5.6.6.)
- ■ Solid piping must be used between *storage tanks* located on shore. Suitable lengths of acceptable flexible hose may be used between piping on floating structure and solid piping located on shore. (FC 4.5.6.6.)

Bullets:	■ Statutory Requirements • ❑ Recommended Practices °	**Symbols:**	less than (**<**) greater than (**>**) equal to or less than (**=**) equal to or greater than (**>**)	**Abbreviations:**	meter (**m**) litre (**L**) kilogram (**Kg**)

Statutory Requirements & Recommended Practices

- ■ Where *storage tanks* at marine *fuel dispensing stations* are at an elevation above the dispenser, an electrically operated solenoid valves, designed to open only when the dispensing apparatus is being operated, must be provided at the *storage tank* outlet. (FC4.5.6.6.)

5.2 OPERATIONS

Spill Control & Secondary Containment

- ■ All fuel *storage tanks* > 230L capacity require *secondary containment.* (FC 4.3.7.) (See Section 6. 1. Secondary Containment.)

- ■ *Spill control* must include one or more of the following:
  - double-walled tank
  - tank-in-a-box system
  - a graded or sloped site capable of diverting and containing a spill and preventing spills from entering natural waterways, storm drains and sanitary sewers
  - a paved or concrete pad sloped so that water and spilled fuel is directed to an appropriately designed oil/water separator
  - a non-combustible barrier of sufficient height to contain the spill. (FC 4.1.6 & FC 4.3.7.)

- ■ *Secondary containment* must be able to contain 110% of the primary tank plus 10% of all the additional containers. *Secondary containment* must not be used for storage purposes. (FC 4.3.7.3 & FC 4.3.7.9)

- ■ Tanks within the containment area must be on the ground, mounted to a skid or securely positioned on a cradle. The cradle or tank support shall have a fire-resistance rating of not less than 2 hours (i.e. steel). (FC 4.3.3.1.)

- ■ Visual inspections must be made daily and during each shift of the piping system, pumps and ancillary equipment for leaks, spills and obvious abnormal conditions. Any leakage must be repaired immediately. (FC 4.4.11.5.)

- ■ Precipitation must not be allowed to accumulate within the containment area. (FC 4.3.7.8.)

- ❑ Safety measures for docks and floating structures should take into account wave action, tidal movement and wind storms, and may include:
  - ° additional containment (e.g., 150%) with an increased distance between the tank and the wall of the *secondary containment* (e.g., 1m)
  - ° floats engineered, designed and constructed to be stable when the fuel tank, and possibly the *secondary containment*, are at maximum capacity due to water accumulation.

- ❑ Ensure that the *secondary containment* is kept clean of fuel and oil contamination.

Statutory Requirements & Recommended Practices

Safety Awareness

- ■ At least 2 portable 20-B:C rated *fire extinguisher*s and one spill response kit must be provided on site. (FC 4.1.5.1.)
- ■ Only trained personnel must be allowed to use the fuel dispensing system. (FC 4.4.11.2.)
- ■ Signs, indicating that the ignition must be turned off and smoking is not permitted while the vehicle is being refuelled, must be visible to every driver approaching the dispenser. (FC 4.5.8.8.)
- ❑ Mark each *storage tank* at a level corresponding to 90% capacity, and do not fill beyond that level.
- ❑ Ensure that clearly marked sign outlining the fuelling procedures is visible to all operators.
- ❑ All personnel on floating structures should use coast guard-approved life jacket/vests.
- ❑ Non-skid surfaces should be used in areas of high traffic and on tidal fluctuating ramps.
- ❑ For docks and floating structures, additional safety measures should be considered to take into account wave action, tidal movement and wind storms. These measures may include:
  - ° stabilizers under the fuel dock
  - ° one-way flow valves on all solid lines connecting *storage tank* to dispensers
  - ° break-away devices between docks and dock/shore.

Dispensing

- ■ Dispensers at *marine fuel dispensing stations* shall be at a location which will permit safe access by watercraft. (FC 4.5.2.4.)
- ■ At *marine fuel dispensing stations*, a readily accessible valve shall be provided in each pipeline at or within 7.5m of the pier to shut off the supply from shore. (FC 4.5.4.3.)
- ■ Tanks and pumps that are not integral with the dispenser shall be located on shore or on a pier of the solid-fill type. (FC 4.5.6.6.)
- ■ Where shore locations would result in excessively long supply lines to the dispenser, *storage tanks* to a maximum capacity of 5,000L to a maximum capacity of 5000L are permitted on a pier provided applicable spacing, *secondary containment* and piping requirements are met. (FC 4.5.6.6 & FC 4.3.7.)
- ■ The length of extended fuel dispensing hose at *marine fuel dispensing stations* is permitted to exceed the values which apply to other *fuel dispensing stations* (4.5m, or 6m). (FC 4.5.5.1.(4))
- ■ All hoses must be fitted with a *breakaway valve* when using a nozzle with a hold-open device. (FC 4.5.5.2.)
- ❑ Keep all fuel delivery hoses off the surface of the dock walkway.

Bullets:	■ Statutory Requirements • ❑ Recommended Practices °	**Symbols:**	less than (**<**) greater than (**>**) equal to or less than (**=**) equal to or greater than (**>**)	**Abbreviations:**	meter (**m**) litre (**L**) kilogram (**Kg**)

Statutory Requirements & Recommended Practices

- ❑ Use anti-surge valves in all the fuel vent lines.
- ❑ Use *breakaway valves* between all jump-hoses for dock-to-dock and dock-to-shore connections.
- ❑ Any delivery hose that has the potential to cause a spill, if it were pulled from the delivery pump or valve, should be fitted with a *breakaway valve*.
- ❑ A clearly marked sign outlining fuelling procedures should be visible to all operators including:
  - ° one person should stay with the fuel nozzle at all times during refuelling
  - ° sorbent pads should be used to catch drips from the nozzle.
- ❑ Tanks should be marked at a level corresponding to 90% capacity, not filled beyond that level, and care should be taken so that:
  - ° fuel levels are checked prior to filling
  - ° valves are closed and the hose properly secured when refuelling is finished
  - ° appropriate fuel caps are secured after refuelling
  - ° portable fuel tanks are filled onshore.
- ❑ For docks and floating structures, safety measures should be taken, to account for wave action, tidal movement and windstorms, including one-way flow valves on solid lines from *storage tanks* to dispensers.

Pollution Prevention

- ■ All dock facilities must have spill response kits capable of containing and absorbing fuel spills on water. (FC 4.1.6.3.) (See Section 9.5 Spill Response Equipment.)
- ■ Suitably qualified personnel must prevent a boom boat from being overfilled by providing continuous supervision of the filling operations. (FC 4.3.1.8.)
- ❑ Sorbent pads should be used around the fill stem pipe to catch any drips from the nozzle while refuelling.
- ❑ Standard industrial refuelling equipment and parts should be used to ensure that the design meets industrial standards.

Emergency Response

- ■ Spills of TDG Class 3 – *flammable liquids* ≥ 100L must be reported to the Provincial Emergency Program (PEP) telephone **1-800-663-3456**). (WMA, *Spill Reporting Regulation* – see definition of TDG Class 3 *flammable liquids* in Section 11. Glossary.)
- ■ Ensure that spills are recovered and that contamination is removed or treated. (FC 4.1.6.3.) (See Section 8. Treating Hydrocarbon Contaminated Soils.)

Statutory Requirements & Recommended Practices

- ■ Maintain a spill response kit capable of containing and absorbing fuel spills. (FC 4.1.6.3.)
- ■ Review fire safety plans annually. (FC 2.8.2.)
- ❑ Post spill response procedures in locations that are visible to all operators
- ❑ An emergency response plan should be implemented immediately following a spill.
- ❑ Use all available resources and technical expertise to ensure a quick and effective response.
- ❑ Maintain an adequate spill response kit capable of containing and absorbing fuel spills. (See Section 9.3. Spill Response Equipment.)
- ❑ An emergency shut-off system should be used to immediately close all valves between fuel storage units and dispensing units.

5.3 DOCUMENTATION & TRAINING

Inspection & Documentation

- ■ Visual inspections must be made daily and during each shift of the piping system, pumps and ancillary equipment for leaks, spills and obvious abnormal conditions. Any leakage must be repaired as quickly as practicable. (FC 4.4.11.5.)
- ■ A fuel-*storage tank* that is resting on the ground, such that visual inspection beneath the tank is not possible, must be measured daily (using tank dip measurements) and any gain or loss of liquid recorded. (FC 4.3.16.1.)
- ❑ Implement an *environmental management system* (EMS) to assess and assist in managing risks.
- ❑ The owner/operator should keep a record of all volumes before and after deliveries.
- ❑ Develop a checklist system to ensure all aspects of the facility are inspected and working as required.

Training and Signage

- ■ Post clearly legible operating instructions. (FC 4.5.8.4. & FC 4.5.8.8.)
- ■ Emergency instructions must be conspicuously posted. (FC 4.5.8.4.)
- ❑ Spill and fire training procedures should be assessed annually and changes implemented as necessary.
- ❑ A record of training scenarios and exercises should be kept on file.

Section 6. SECONDARY CONTAINMENT & COLLISION PROTECTION

Statutory Requirements & Recommended Practices

6.1 Secondary Containment

■ The Ministry of Water, Land and Air Protection may order preventive measures to reduce the risk of a spill entering the environment. (WMA Section 33)

❑ *Secondary containment* works should include *spill control* measures for preventing *petroleum products* from entering natural waterways, storm drains and sanitary sewers. These measures may include the following:

- site selected for adequate slope or graded to divert and containing a spill
- double-walled tanks or tank-in-a-box systems that operate in high-risk areas (See Section 7. – Risk assessment)
- paved or concrete pad sloped so that water and spilled fuel will be directed to an appropriately designed oil/water separator
- tank-farm *berm* that conforms to FC 4.1.6 or containment for a single tank of sufficient size to contain the volume of the tank plus 10%
- for a multi-*tank farm* facility, a *berm* capable of containing 110% of the largest tank or 100% of the largest tank plus 10% of the aggregate volume of all the tanks within the *berm*, whichever is greater.

.

6.2 Design, Materials & Construction

❑ *Secondary containment* works should be designed and constructed by incorporating:

- concrete, steel or soil with an impermeable geotextile material of 30 mil
- soil permeability should be sufficient to contain a spill (i.e. clay of not more than 10^{-6} cm/s)
- geotextile with sand above and below the geomembrane liner when used in combination with soil
- a means of removing accumulated precipitation and any spills within the *bermed* area. (For example a sump and siphon system, an oil/water separator or a hydrocarbon detection electric sump pump
- necessary means of testing for leaks after construction. (For example, fill the *berm* with water and monitor the level over a period of a few days.)
- covered containment where practicable to minimize maintenance.

.

6.3 Maintenance

❑ Maintenance should include regular inspection of containment works to ensure:

- the integrity of the containment system
- containment systems are emptied of rainwater/snow accumulations
- drainage valves and plugs in steel *secondary containment* units are closed or sealed
- geomembranes are not exposed or damaged.

6.4 Discharge of Wastewater

Subject to compliance with the WMA, *Petroleum Storage and Distribution Facilities Stormwater Regulation*, the *Special Waste Regulation*, and a permit, approval or order, an operator may introduce hydrocarbon contaminated storm water effluent into the environment from a petroleum storage and distribution facility.

Bullets:	■ Statutory Requirements	**Symbols:**	less than (**<**)	**Abbreviations:**	meter (**m**)
	•		greater than (**>**)		litre (**L**)
	❑ Recommended Practices		equal to or less than (**=**)		kilogram (**Kg**)
	°		equal to or greater than (**≥**)		

Statutory Requirements & Recommended Practices

■ A petroleum storage and distribution facility that:
- has a cumulative storage capacity >100,000 L,
- occupies a location for a period ≥180 consecutive days, or
- is not part of a retail service station,

must maintained the discharge of stormwater from its operations to the environment, so that the total extractable hydrocarbon in the discharged effluent is = 15mg/L.

❑ Maintain any sized operation so that the quality of a discharge to the environment does not exceed a total extractable hydrocarbon content of 15 mg/L.

❑ If the accumulated precipitation has an oily sheen, a bad odour or appears to be contaminated, it should be sampled and analyzed according to Schedule 2, WMA, *Petroleum Storage and Distribution Facilities Storm Water Regulation*.

❑ Use an oil/water separator, carbon filter, coalescing separator or other approved treatment/filter system as appropriate.

❑ Contaminated water from a *secondary containment* can be pumped into *drums* (or other containers) and disposed of through a suitably qualified disposal company.

6.5 Collision Protection

■ *Storage tanks* that are exposed to risk of collision must be protected by posts or guardrails. (FC 4.3.7.4. (2)(c))
- the B. C. Fire Commissioner has ruled that *aboveground storage tanks* at permanent *fuel facilities* require barriers consisting of not less than 100mm diameter steel pipes filled with concrete, that are set into the ground to a depth of at least 1m and extend above ground for at least 750mm. These posts must be spaced not more than 1400mm apart and positioned at a distance of 1m from the exterior of the tank assembly's outer shell. (HM 09 91-11-21).

■ Regarding a tank-in-a-box storage system the B. C. Fire Commissioner has ruled that the aboveground tank assembly satisfies the intent of FC 4.1.6. and is acceptable without the need for a conventional dike. (HM 09 91-11-21).

Section 7. RISK ASSESSMENT

The objective of *risk assessment* is to help operators understand the level of risk they are taking in managing their *fuel facility* for the purpose of taking appropriate risk-control measures.

This section provides a simple risk-ranking approach:

a) assign a risk-rank value (3 for high, 2 for medium and 1 for low) for each of the risk identification categories indicated in the column on the left in Table 7.1.
b) add these values to arrive at the total risk-ranking value for the fuel storage facility.

Table 7.1. Risk-Ranking for Land-Based Fuel Facilities

Risk Identification Category	**Risk Rank High**	**Risk Rank Medium**	**Risk Rank Low**	**Assigned Risk-Rank Value**
Numerical Value	**3**	**2**	**1**	
Environmental				
Distance to nearest water course	< 50m	50m-100m	>100m	
Characteristic of soil at the *fuel facility*	Porous or unknown	semi-porous	Non-porous clay/bedrock	
Slope of terrain surrounding the *fuel facility*	>6% slope	2%-6% slope	<2% slope	
Operational				
Site designation or description	High traffic logging road (Main Line)	Low traffic logging road (Side Spur)	No through traffic logging road	
Duration of *fuel facility* operations	> 6 days	2-6 days	< 2 days	
Volume of fuel stored at the *fuel facility*	> 4500L	500L-4500L	<500L	
Number of times the *fuel facility* is used per day	> 12 times per day	6-12 times per day	<6 times per day	
Amount of traffic around the *fuel facility*	> 15 people on site	5-15 people on site	<5 people on site	
Prevention / Preparedness				
Distance to additional spill response cache	> 60 minutes	15-60 minutes	<15 minutes	
Additional *spill control*	Tank with no *secondary containment*	Tank with *secondary containment*	Tank with *secondary containment* & additional *spill control* – graded site	
Last spill response training session for everyone handling fuel	Operator not trained in >2 years	Operator not trained in 1-2 years	Operator trained in the last year	
Total Risk-Rank Value (total of the Assigned Risk-Rank Values) =				

In Table 7.2. use the total Risk Rank Value determined from Table 7.1. to determine appropriate levels of effort to mitigate the risks at the fuel handling facility.

Table 7.2. Recommendations on Risk Control Measures

Numerical Value	Risk Ranking	Recommendations on Risk Control Measures
<12	Low Risk	(a) No additional control measures are necessary.
12-23	Medium Risk	(a) Additional control measures should be considered to reduce risk. (b) Document inspections.
>23	High Risk	(a) Additional controls are necessary to reduce risk. (b) Consider moving the fuel facility. (c) Document inspections.

Section 8. TREATING HYDROCARBON CONTAMINATED SOILS

8.1 Introduction

The objective of this section is to provide some information on processes for handling, treating and disposing of soil that has been contaminated with petroleum hydrocarbons (gasoline, diesel fuel, lubricating oil and waste oil).

The ongoing remediation of polluted or contaminated sites will help minimize the long-term environmental impacts of contamination from minor spills, leaks and drips from mobile equipment. These remediation activities are meant to complement ongoing maintenance programs for the handling, transportation and storage of fuel.

The reader is referred to the *Contaminated Sites Regulation B. C. Reg. 375/96,* and the WMA, *Special Waste Regulation B. C. Reg. 63/88* for requirements related to the notification, investigation, remediation and if desired, certification of petroleum hydrocarbon contaminated sites and the movement, disposal or alternate use of petroleum hydrocarbon contaminated soil.

8.2 Polluted or Contaminated Soil Remediation

"Land farming" is a commonly used method of soil remediation for lightly hydrocarbon-contaminated soil that relies on natural breakdown of hydrocarbons by microbial action. This is done by spreading a shallow layer of contaminated soil onto a lined *bermed* area referred to as a *biocell*, or by piling the soil in long row known as a windrow.

Factors that determine the efficiency of microbial action include temperature, moisture, aeration and the availability of nutrients. In many cases, natural microbes present in soil are adequate to commence treatment; however, a commercially available microbial mixture may be worked into the soil along with dry nutrients (nitrogen and phosphorus) during periodic cultivation of the land farm.

Biocells and windrows should be located on impermeable soil (i.e. clay), as far away from watercourses or *riparian zones* as possible and secure from public access (i.e. within a fenced compound). Locate the *biocell* or windrow on high ground and above the seasonal high water table to facilitate proper drainage. It is important to check with a Ministry of Water, Land and Air Protection (MWLAP) Regional Office before finalizing the siting of proposed soil treatment facilities.

8.3 Contaminated Soil Collection

Contaminated soil or visually stained soil should be collected on a regular basis. Visual inspection of the ground surface should provide a rough estimate of the amount of soil that must be removed. Samples of the base and walls of the excavation pit will help ensure that all the contamination has been removed and provide a record of clean up.

In areas where the contaminated soil lies below existing structures (i.e. *storage tanks*, storage sheds, generator sheds, pumping stations, waste oil storage sheds) the following steps should be taken:
Ensure that all hydrocarbon leak(s) is/are stopped at the source. This includes leaking pipes, oil *drums*, drip trays, etc.

- Contact the MWLAP Regional Office to assist in a site assessment.
- Remove as much of the contaminated soil as possible.
- If the structure cannot be removed, the location of the contamination should be noted.

At historically contaminated sites, the depth of oil or fuel seepage may be considerable. Under these conditions an environmental consultant should be retained to assess the contamination and develop an effective remediation and monitoring plan.

8.4 Preparing a Windrow

A windrow is usually formed 1m to 2m in height and is as wide as the soil naturally falls during its construction. The soil is turned over frequently to promote aeration of the soil and evaporation of the hydrocarbon. During wet seasons, the windrows should be covered with plastic tarps to minimize the potential for leachate formation and the contamination of storm water runoff.

8.5 Preparing a Biocell

A *biocell* should be constructed over a period of time to a maximum depth of no more than about 3-4 ft (1 meter) in depth as the natural breakdown of hydrocarbons occurs. To allow for effective aeration, successive layers of contaminated soil should be spread up to 1 – 2 feet deep over a buffer layer of clean soil on the bottom of the *biocell*.

Stockpiled soil should be banked or sloped close to the perimeter of the *biocell*, and covered as necessary to deflect surface water run-off.

The *biocell* should have a built-in ramp at one end and to allow front-end loader/back-hoe operations while at the same time preventing runoff carrying hydrocarbons and fertilizer. The base of the *biocell* should be sloped to one corner to collect leachate. A pump-and-treat system may be required to ensure that leachate does not escape to the environment.

Where a geotextile-type liner is used, a protective buffer layer of uncontaminated soil or plywood should be used over and under the liner on the *biocell* floor.

8.6 Adding Nutrients

Based on the level of contamination and the soil type, add a commercially available microbial mixture and nutrient blend to the soil using a spray system. Work the soil until the fertilizer is adequately mixed throughout the layer of soil.

To avoid anaerobic poisoning of microbes, leachate accumulation and the need for leachate treatment, avoid excess water accumulation in the *biocell*.

Aerating the soil is very important, especially during the initial stages, because the bacteria in the soil require oxygen to break down the petroleum contamination. Aeration can be achieved using a cultivator or by turning it with a front-end loader every two weeks.

8.7 Disposal of Remediated Soil in British Columbia

Sufficiently treated soil can be useful as cover material for landfills or as material for road construction.

Prior to removing the soil for disposal or alternate use, written approval must be obtained from the MWLAP Regional Office. Complete information on contaminated site remediation in B. C. is available at the ministry's contaminated sites web page at: http://www.elp.gov.bc.ca/epd/epdpa/contam_sites/

Section 9. SPILL RESPONSE

This Section provides information on the spilled material, notification of appropriate authorities, initial assessment of the extent of the spill in the environment, initial spill response and a list of spill response equipment.

9.1. Initial Spill Identification, Notification and Assessment

The first responder must make an initial identification of the spilled material, and assess the incident prior to taking action to ensure that resources are used effectively. This assessment includes collecting information on safety and the extent of the spill in the receiving environment. The assessment is followed by an initial response procedure.

Table 9.1. Initial Spill Identification, Notification and Assessment Procedure

PRIORITY	ACTION
Identify Spilled material	❑ Identify product spilled and flammability of the product ***(What)*** (See Section 11. Glossary for FC and TDG definitions of *flammable liquid/combustible liquids*.)
Safety (a) Use the buddy system (b) Never work alone. (c) Initiate action	❑ **For spills of gasoline or other *flammable liquids* – clear and secure the site and notify the fire department and the Provincial Emergency Program (PEP) – see telephone number below).** Further spill assessment and response for these products **is usually too dangerous.**
Safety Action	❑ Determine safety and protective equipment for working in or around the spill. ° Provide first aid to injured persons ° Monitor vapour levels ° Prioritize the safety action plan.
Initial Spill Description	❑ Describe the spill ***(Where, When and How)*** ° Identify the tank volume ° Note the duration of spill from tank or line ° Note any potential fire hazards ° Note any other physical hazards ° Determine if the spill can be stopped ° Determine if the spill can be contained at the source or downstream
Notify PEP **1-800-663-3456**	■ Immediately report spills ≥100 litres of TDG Class 3 – *flammable/combustible liquids* or waste oil to PEP. (WMA *Spill Reporting Regulation*) • Complete a spill reports form, including ***whom, what, where, when and how***.
Description of Spill in the Receiving Environment **Determine equipment needed for initial containment, recovery, and clean-up.**	**On land** ° Mark the extent (perimeter) of the spill area. ° Dig test pits to determine the depth of the spill in the ground. **In streams, creeks or ditches** ° Note the destination of spilled product downstream. ° Identify eddies, pools or culverts to use in diverting the spill. ° Note the depth and the velocity of the water. ° Note soils, vegetation, fish spawning areas, bird habitat, and wildlife. **In lakes, ponds & lake foreshore** ° Identify any downstream areas and the rate of spread of the main slick. ° Visually inspect the foreshore to identify the extent of contamination. ° Note where the product is pooling along shore. ° Note any marsh areas that must be protected.

9.2. Initial Spill Response for Combustible Products

The first response action provided in Table 9.2. is to be used in conjunction with annual spill response training.

Table 9.2. Initial Spill Response for Combustible Products (See Section 11. Glossary for FC and TDG definitions of *flammable liquids* and *combustible liquids*.)

PRIORITY	RESPONSE ACTION
Act Fast & Think Safety	❑ Use Common Sense! ❑ Prior to taking any action, ensure that a complete assessment is made to ensure that resources are used effectively. ❑ Use appropriate safety procedures and personal protective equipment. ❑ An intense & quick response is essential to minimize the potential impact on the environment.
Containment & Recovery	**Spill to Land** ❑ Mark the perimeter of the spill. ❑ Dig recovery ditches around the perimeter (and pits within the spill area) to contain the spill. ❑ Monitor the ditches and pits to ensure the collection system are effective. ❑ Use sorbent pads to remove free product and excavate the contaminated soil. ❑ Sample the soil to determine the extent of contamination. ❑ Pump the product from the containment area or obtain approval from BC MWLAP to burn the product. **Spill to Water** To effectively contain the spill, use several containment methods in series: ❑ In a ditch or stream, contain the spill using tarp containment system, underflow system or containment booms. ❑ In open water (i.e. lake) divert the spilled product to the containment system using sorbent booms, synthetic booms. ❑ Use sweeps to corral the spilled product to one corner. Add a second containment boom if required. ❑ Use sorbent pads and/or pumps to collect the spill products from the containment area. ❑ Use sweeps and sorbent pads to recover the product. Use a wringer to extract the excess product then reuse the sorbent pads. ❑ Use a skimmer or suction pump (i.e. pump truck) if the volume is significant and the spill is contained. ❑ Develop a monitoring program to assess and remove free product over a given time frame.
Disposal & Site Restoration	❑ Confirm disposal options and approval with BC MWLAP. ❑ Take photos and notes to document the spill incident, response and clean-up. ❑ Ensure samples are taken and the results are properly documented and kept on file.

9.3. Spill Response Equipment

The necessity for spill response equipment will depend on the environment, the time of year and the type of incident. The following table – "General Spill Response Equipment Cache" serves as a guide to equipment that should be maintained within a reasonable distance of any potential spill location. Separate lists are provided for pick-up trucks and tank vehicles to help implement response preparedness.

The need for additional response equipment, resources or expertise will depend on the initial assessment of a spill, including safety, initial *spill control* and the extent of the spill in the receiving environment. These resources should be listed in the emergency response plan.

Table 9.3 (a) General Spill Response Equipment Cache

General Equipment
Communication
Up-to-date Emergency Spill Response Plan
Inventory of spill response equipment and locations
Spill assessment forms (i.e. Environmental, safety and spill assessments)
Two-way radios, cell phone or other appropriate radio transmitter/receiver
Personal Protection and Safety
PVC gloves, insulated rubber gloves, leather gloves
Rain gear (pants and jackets), steel toe rubber boots
Safety glasses, hard hat, hearing protection
20:BC rated *fire extinguisher*, first aid kits
Hand Tools
Tool kit, *drum* bung-wrench
Pointed and/or broad shovels
Flagging / barrier tape, traffic cones
Tie wire, duct tape, 100m of nylon rope (braided or twisted)
Containment
1L of commercially available bentonite clay or equivalent (in dry or pre-mixed form) used to plug holes in leaking containers
3 tarps (large and medium)
80-100 empty sand bags (to be filled when required)
River boom 100-600 ft (30-180 m)
Re-bar (12 stakes)
Rope 1/4" diameter x 300 ft (200 m)
5 PVC pipes, 4" x 12'
Recovery and Storage
3-6 bails of sorbent pads
2-4 bails of sorbent booms
1 roll of sorbent blanket
1,000 gallon (4,546 litre) port-a-tank
45 gallon *drums* - open tops with lids
Wringer for pads with open top *drum*
Plastic *drum* liners

Table 9.3 (b) Spill Response Equipment Located with Pick-Up Truck

Equipment for 500L truck-box fuel tanks, 200L drums, & pails
Personal Protective Equipment
Rubber steel toe boots, hard hat
Rain gear, PVC gloves, eye/ splash protection
Hand Tools
Shovel
Flagging / barrier tape
Containment
250ml commercially available bentonite clay (in dry or pre-mixed form) used to plug holes in leaking containers.
1 tarp (4m x 5m) and rope
10-20 empty sand bags (to be filled when needed)
Plywood (1m x 2m)
Recovery and Storage
Plastic *drum* liners (heavy plastic bags)
25 absorbent pads (for petroleum)
1 absorbent boom (3m) and rope

Table 9.3 (c) Spill Response Equipment Located with Tank Vechicles

Equipment for 2,000L – 5,000L tanks & 10,000L fuel trucks
Personal Protection and Safety
Rubber steel toe boots, hard hat
Rain gear, PVC gloves, eye/ splash protection
Hand Tools
2 shovels
Tool kit
Reflective traffic warning triangles
Containment
1L of commercially available bentonite clay (in dry or pre-mixed form) used to plug holes in leaking containers.
2 tarps (medium and large)
Hatch-cone kit and hatch lock kit
3 plastic pails
Mobile Operations
Plastic *drum* liners (heavy plastic bags)
25 absorbent pads (for petroleum)
1 sorbent boom (3m) and rope

Section 10. STATUTES, INDUSTRY STANDARDS & CODES OF PRACTICE

A *fuel facility* should be operated and maintained according to (and not limited to) the following statutes, industry standards and codes of practice:

- B. C. Coastal Marine Facility and Operating Standards, Second Edition 1992
- British Columbia *Fire Code* 1998, and Office of the Fire Commissioner – Interpretation Bulletins (See below: Interpretation Bulletin No. IB 016 Pumps for Transferring Flammable or Combustible Liquids.)
- Fire Services Act [RSBC 1996] Chapter 144
- Fisheries Act (See *note below)
- Forest Act
- Forest Practices Code of British Columbia Act B. C. Reg. 106/98 Consolidated to November 24, 2000. (FPC)
  - Community Watershed Guidebook – 4
  - Forest Road Regulation
  - Operational Planning Regulation & Forest Road Engineering Guidebook
  - Range Practices Regulation
  - Timber Harvesting Practices Regulation
- Motor Vehicle Act, B. C. Reg. 26/58 (MVA)
- Transportation of Dangerous Goods Act and Regulations (TDG)
- ULC/CSA standards
- Water Act [RSBC 1966] Chapter 483
- Water Protection Act [RSBC 1996] Chapter 484
- Waste Management Act (WMA) (See *note below)
  - Contaminated Sites Regulation B. C. Reg. 375/96
  - Petroleum Storage and Distribution Facilities Storm Water Regulation B. C. Reg. 168/94.
  - Special Waste Regulation B. C. Reg. 63/88
  - Spill Reporting Regulation B. C. Reg. 263/90.
- Workplace Hazardous Materials Information System (WHMIS)

Office of the Fire Commissioner – Interpretation Bulletin No. IB 016
Pumps for Transferring Flammable or Combustible Liquids

In response to some questions on the issue of pumps and the power source for pumps used to transfer flammable or combustible liquids from containers or portable tanks, clarification of the OFC position and interpretation of the BC Fire Code is offered.

Part 4 of the BC Fire Code deals with transferring of flammable or combustible liquids from containers or portable tanks, whether mounted on trucks or service vehicles or installed in remote areas outside of buildings.

Section 4.22 “Tank Vehicles” is silent about pumping equipment yet the scope of Section 4.22 covers any vehicle with a cargo tank having a capacity of more than 450 L, (100 gallons) mounted or built as an integral part of the vehicle.

Dispensers at fuel dispensing stations must conform to CSA B346-M “Power operated Dispensing Devices for Flammable Liquids”. Pumps used to transfer flammable or combustible liquids from containers and tanks are required to be designed in conformance with good engineering practice. Pumps tested and listed by recognised agencies such as Underwriters Laboratories Inc. and Factory Mutual Engineering Corporation are considered to be designed in conformance with good engineering practice.

The power sources for driving these recognised pumps are varied and range from hand operated, electric motors, internal combustion engines and transfer box drives from the vehicle gear box.

Hand operated pumps pose little if any concerns and should be used only for transfer from drums. Electric driven units shall be listed for use with flammable or combustible liquids and are used frequently on tanks mounted on service vehicles.

Internal combustion engines used to drive pumps transferring flammable or combustible liquids have created some concerns in the last few years. However, NFPA 385 "Standard for Tank Vehicles for Flammable and Combustible Liquids" recognises this practice and lays out some requirements where internal combustion engines are use to drive pumps.

1. The engine air intake shall be equipped with an effective flame arrester, or an air cleaner having effective flame arrester characteristics, substantially installed and capable of preventing emission of flame from the intake slide of the engine in the event of a backfire.

2. The fuel system shall be so located or constructed as to minimize the fire hazard from spillage during filling and leakage from the tank or the fuel system.

3. The engine shall be so located in relation to the pump that spillage from the pump shall be prevented from coming in contact with the engine or any part of the ignition and exhaust system. Adequate shielding can be provided to attain the same purpose.

4. Where the engine is carried within an enclosed space, adequate provision shall be made for air circulation at all time to prevent accumulation of explosive vapours and avoid overheating of the engine.

5. The exhaust system shall be substantially constructed and installed and free from leaks. The exhaust line and muffler shall have adequate clearance from combustible materials, and shall discharge at a location that will not constitute a hazard. When engines are carried within an enclosed space, the exhaust gases shall discharge outside of such enclosed space.

6. The ignition wiring shall be substantially installed with firm connections. Spark plugs and other terminals shall be suitably insulated to prevent sparking in event of contact with conductive materials. The ignition switch shall be of the enclosed type.

***Under the Waste Management Act**

- Failure to report the fuel spill – a violator may be liable to a penalty of up to $200,000 and/or up to six months imprisonment.
- Introduction of waste into the environment (air, land or water) – a violator may be liable to a penalty of up to $1,000,000 and/or up to six months imprisonment.
- Introduction of waste into the environment in such a quantity as to cause pollution – a violator may be liable to a penalty of up to $1,000,000 and/or up to six months imprisonment.

***Under the Fisheries Act**

- A fuel spill or deposit of other deleterious substances into waters frequented by fish is a violation – a violator may be liable to a penalty under Summary Conviction of up to $300,000 and/or up to six months imprisonment. If convicted under Indictment, the violator is liable to a penalty of up to $1,000,000 and/or up to 36 months imprisonment.

The onus is on the company or responsible person to demonstrate to the Conservation Officer Service the means taken to prevent a fuel spill in their operations involving handling, storage, and transportation of fuels.

Section 11. GLOSSARY

***aboveground storage tank* (AST)** means a *storage tank* (capacity greater than 230 litres (L)) which is at least 90% above surface grade.

berm means an impermeable system for containing leaks or spills. In *tank farms* containing a single tank, it must be of sufficient size to contain the volume of the tank plus 10%. For a multi-*tank farm* facility the *berm* must contain 110% of the largest tank or 100% of the largest tank plus 10% of the aggregate volume of all the tanks within the *berm*, which ever is greater. The *berm* can be constructed of steel, concrete, or soil in combination with a geotextile liner that is compatible with and impermeable to the stored liquid.

biocell means a *bermed* and lined area used for application of biological methods for treating hydrocarbon-contaminated soil.

breakaway valve means valves used on fuel hoses to prevent spills from hose and valve connectors. The typical breaking point is 300 lbs. (136 kg). These valves are usually located on either end of the fuel dispensing hose.

combustible liquids (See *flammable liquids* below – this glossary)

CGSB 43.146 refers to the Canadian General Standards Board (CGSB) standard for "Intermediate Bulk Containers (IBC) for the Transportation of Dangerous Goods" and the United Nations (UN) requirements for IBC's. The requirements for certification include material type, construction and pressure relief requirements, design type, tests, and quality assurance.

CSA B620-87 means the Canadian Standards Association (CSA) *Preliminary Standard B620-1987 Highway Tanks and Portable Tanks for the Transportation of Dangerous Goods.* This standard outlines the requirements for certification including: material thickness, weld thickness, material alloy and properties, structural integrity, circumferential reinforcement, rollover protection, rear bumpers, emergency flow control and piping protection, vents and, closure for manholes.

CSA B620-98 means the Canadian Standards Association (CSA) *Preliminary Standard B620-98 Highway Tanks and Portable Tanks for the Transportation of Dangerous Goods.* This second edition of the CSA Standard B620 is expected to replace and supersede (in 2001) Preliminary Standard B620 published in 1987 under the proposed regulation.

dunnage means loose material used around a cargo to prevent damage.

drum means a barrel having a capacity of less than 230L (50 imperial gallons) but greater than 23 litres (5 imperial gallons).

***environmental management system* (EMS)** means a system including "organizational structure, responsibility, practices, procedures, processes, and resources for developing, implementing achieving, reviewing, and maintaining the environmental policy" - (ISO 14001)

fire extinguisher includes:
a 10-B:C rated portable *fire extinguisher* (weighing approximately 5lbs. depending on manufacturer);
a 20-B:C rated portable *fire extinguisher* weighing approximately 10lbs. depending on manufacturer).

***Fire Code* (FC)** Means the British Columbia *Fire Code*, 1998.

fixed location means any location that is used to store a fuel tank (or container), regardless of the length of time it is being stored.

flammable liquids combustible liquids In the B. C. FC (and National *Fire Code* – NFC), liquids with a *flash point* below 37.8 °C are referred to as *flammable liquids*, whereas liquids with a *flash point* at or above 37.8 °C are referred to as *combustible liquids*. In contrast, TDG Regulations classifies *flammable liquids* as Class 3 Dangerous Goods, and defines them as liquids having a *flash point* below 61 °C.

Comparison of FC and TDG classifications based on flash point (FC A-4.1.2.1.)

***Flash point* °C**	**NFC Classification**	**TDG Classification**
below –18	IA	3.1
at or above –18 & below 22.8	IA	3.2
below 22.8 (equivalent to 23 in TDG)	IB	3.2
at or above 22.8 & below 37.8	IC	3.3
at or above 37.8 & below 60 (equivalent to 61 in TDG)	II	3.3
at or above 60 & below 93.3	IIIA	Not Regulated
at or above 93.3	Not Regulated	Not Regulated

flash point means the lowest temperature at which a liquid or solid (e.g., petroleum product) gives off vapour of sufficient concentration to form an ignitable mixture in air as determined by a closed cup test describe in Part I of Schedule IV of the TDG Regulations.

FPC means Forest Practices Code of British Columbia Act B. C. Reg. 106/98 Consolidated to November 24, 2000

fuel cache means a temporary storage (e.g. seasonal) of *drums* at a remote location.

fuel dispensing* (or service) *station means any *fuel facility* (operating on marine or fresh waters) including service stations, self-service outlets or *tank farms* at isolated industrial projects at which *flammable liquids* or *combustible liquids* are dispensed from fixed equipment into the fuel tank of a vehicle, watercraft, or other equipment.

fuel facility means any location (may include a remote *fuel cache*) at which *flammable liquids* or *combustible liquids* are dispensed from a *tank vehicle* or fixed *storage tank* into the fuel tank of a motor vehicle, equipment or watercraft.

hatch-cone kit is a funnel-shaped bag used to off-load fuel from the hatch of a rolled over fuel truck. The wide end of the funnel is fitted with a wire clamp that can be secured under the lip of the dome. The small end of the funnel is fitted with a cam-lock fitting for a hose connection.

hydrocarbon fuels means flammable or combustible *petroleum products* including but not limited to, gasoline, diesel, aviation gasoline, jet fuel A (kerosene), jet fuel B (naphtha).

marine fuel dispensing* (or service) *station See *fuel dispensing station* above – this glossary.

overfill protection includes:
prevention of tanks from being overfilled by providing continuous supervision of the filling operation by personnel qualified to supervise such an operation; or,
an *overfill protection* devise conforming to ULC/ORD-C58.15, *"Overfill Protection Devices for Flammable Liquid Storage Tanks."* Examples include float valve shut off devices, audible or visible overfill alarm systems, automatic sensing and shut-off devices and vent restriction devices.

petroleum products includes pure hydrocarbon products or mixtures of hydrocarbons, which have been refined from crude oil, with or without additives, that is used as a fuel or lubricant. Such products include gasoline, diesel fuel, aviation fuel, kerosene, naphtha, lubricating oil, fuel oil, hydraulic oil and engine oil (including used oil) and exclude propane, paint, and solvents.

portable tank means a closed container that is designed to be movable while containing liquid, which is equipped with skids, mountings or accessories to facilitate handling of the tank by mechanical means, and is not permanently attached to a transport vehicle.

purged means a tank from which all vapours have been properly removed by forced air venting or by a non-combustible gas (CO_2 or Nitrogen).

***riparian zones* or areas** mean those terrestrial areas where vegetation complexes and microclimate conditions are products of the combined presence and influence of perennial and/or intermittent water, associated high water tables, and soils that exhibit some wetness characteristics. The terms have traditionally been used in reference to zones within which plants grow rooted in the water table of these rivers, streams, lakes, ponds, reservoirs, springs, marshes, seeps, bogs and wet meadows. The *riparian zone* is influenced by and exerts an influence on the associated aquatic ecosystem.

risk assessment means the rating of relative risks which includes: environmental, operational and prevention/preparedness factors (See Section 7. Risk Assessment.) that is expected be made and documented whenever fuel is stored at a new location.

RSBC means Revised Statutes of British Columbia

secondary containment means structures used for *spill control* such as:
(a) a double walled container (or tank within a tank design);
(b) a steel or concrete container (tank within a box design) capable of containing 110% of the volume being stored (should be manufactured to a ULC specification);
(c) an earth or clay dike which is lined with an impermeable geomembrane material and is capable of containing 110% of the volume being stored; or,
(d) a site which is graded or sloped to divert a spill into a collection system where it will not impact public health, safety or the environment. The containment should be lined with a geomembrane to prevent contaminating the subsurface soil layer.

small container small TDG tank *Small container* means a container with a capacity of less than 230L, including canisters, jerry cans, pails and *drums*, that is covered by the *Fire Code*. *Small TDG tank* means a container with a capacity less than 454L, that is covered by the TDG Regulation. *Small TDG tanks* can be recognized by ULC or CSA label or logo.

specified tank means a tank that was designed and manufactured to recognized engineering standards, in contrast to a "non-*specified tank*" which does not meet recognized engineering standards.

spill control	means site selection and storm water management practices and techniques to prevent spills from entering natural waterways. It may include techniques and structures for diverting or containing spills and preventing them from entering storm drains and sanitary sewers, and may include grading the site, and using double walled tanks and tank-in-a-box systems.
storage tank	means a vessel for flammable or *combustible liquids* having a capacity greater than 230L, and designed to be installed in a *fixed location*. (FC 1.2.1)
tank farm	means any facility where bulk *petroleum products*/ *hydrocarbon fuels* are stored in *storage tank*(s).
tank vehicle	means any vehicle, other than railroad tank cars and boats, with a cargo tank having a capacity greater than 454L, mounted or built as an integral part of the vehicle and used for the transportation of *flammable liquids* or *combustible liquids* and including tank trucks, trailers and semi-trailers. (FC 1.2.1)
Transportation of Dangerous Goods (TDG)	means the Transportation of Dangerous Goods Act, 1992 and Regulations, a comprehensive Canadian statute to promote public safety in the transportation of dangerous goods. .
truck-box fuel tank (includes slip tank or Tidy tank)	means a portable container used for transportation of fuels on a truck. The capacity may vary depending on the type of tank (see Section 2.1. Design.).
Underwriters Laboratory of Canada (ULC)	means the Underwriters Laboratory of Canada, a non-profit organization that maintains and operates laboratories, certification services and a quality system registration program for the examination, testing and classification of devices, construction, materials and systems to determine their relation to life, fire and property hazards.
ULC/ORD-C 142.13 – 1997	means to the Underwriters' Laboratories of Canada /Other Recognized Document requirements for steel tanks that are to be used for the limited transportation of flammable and *combustible liquids* employed in the servicing of off-road equipment. This document outlines the fabrication, inspection and testing for leakage before shipment from the factory as complete assemblies. These requirements cover tanks having a maximum capacity of 5,000L or single wall tanks and tanks with *secondary containment* either as double-wall vacuum monitored or contained tanks. These supply tanks are intended for off road use in forest management and construction or other areas where permitted by the authority having jurisdiction. Tanks manufactured before 2003 are acceptable to Transport Canada and may be used until 2010.
UN 31A/UN 31B	means the United Nations specification for acceptable intermediate bulk containers (IBC) for the transportation of dangerous goods (as per the TDG Regulation), that outlines the acceptable requirements for transporting *flammable liquids* and *combustible liquids* on all public roads. This specification will be the only recognized specification after 2010.

Section 12. CONTACTS

Regional & Sub-Regional Offices	MWLAP	Other Agencies
Vancouver Island Region	2080-A Labieux Road Nanaimo BC V9T 6J9 Tel: 250-751-3100 Fax: 250-751-3103	Office of the Fire Commissioner Victoria Tel: 250-356-9000 BC Forest Service Vancouver Forest Region, Nanaimo Tel: 250-751-7001
Lower Mainland Region	10470 152nd Street Surrey BC V3R 0R3 Tel: 604-582-5200 Fax: 604-582-5334	Canadian Coast Guard North Vancouver Tel: 604-631-3951
Southern Interior Region	1259 Dalhousie Road Kamloops BC V2C 5Z5 Tel: 250-371-6200 Fax: 250-828-4000	Office of the Fire Commissioner Kamloops Tel: 250-828-4001 BC Forest Service Kamloops Forest Region, Kamloops Tel: 250-828-4131
Southern Interior Sub-Region	201 - 3547 Skaha Lake Road Penticton, BC V2A 7K2 Tel: 250-490-8200 Fax: 250-492-1314	
Kootenay Region	401 - 333 Victoria Street Nelson BC V1L 4K3 Tel: 250-354-6355 Fax: 250-354-6367	BC Forest Service Nelson Forest Region, Nelson Tel: 250-354-6200
Kootenay Sub-Regional Office	205 Industrial Road G Cranbrook, BC V1C 6H3 Tel: 250-489-8570 Fax: 250-498-8506	Office of the Fire Commissioner Cranbrook Tel: 250-426-1272
Skeena/ North Coast Region	3726 Alfred Street Bag 5000 Smithers BC V0J 2N0 Tel: 250-847-7260 Fax: 250-847-7591	BC Forest Service Prince Rupert Forest Region, Smithers Tel: 250-847-7500 Canadian Coast Guard Prince Rupert Tel: 250-624-5390

Regional & Sub-Regional Offices	MWLAP	Other Agencies
Omineca-Peace	1011 - 4th Avenue Prince George BC V2L 3H9 Tel: 250-565-6155 Fax: 250-565-6629 Rm. 400, 10003 110 Ave Fort St. John, BC V1J 6M7 Tel: 250-787-3283 Fax: 250-996-5290	Office of the Fire Commissioner Prince George Tel: 250-561-5607 BC Forest Service Prince George Forest Region, Prince George Tel: 250-565-6100
Cariboo Region	400-640 Borland Williams Lake Tel: 250-398-4533 Fax: 250-398-4296	Cariboo Forest Region, Williams Lake Tel: 250-398-4345
Environment Canada Oil, Gas and Energy Division National Task Force on *Storage Tanks*		Tel: 819-997-1221
Office of the Fire Commissioner		Tel: 250-356-9000
Underwriters' Laboratories of Canada (ULC)		Tel: 416-757-3611
Canadian Standards Association (CSA)		Tel: 1-800-463-6727
Provincial Emergency Program	**(PEP)**	**1-800-663-3456**

ATTACHMENT 6: DLC Waste Management Toolkit

DEMOLITION, LAND CLEARING & CONSTRUCTION

DLC Waste Management Toolkit

A GUIDE FOR THE BUILDING CONSTRUCTION INDUSTRY

metro vancouver

BUILDSMART

www.metrovancouver.org

metro vancouver

BUILDSMART

www.metrovancouver.org/buildsmart

Printed in Canada using vegetable-based inks on recycled paper using 100% post-consumer waste.

In this toolkit

Metro Vancouver provides utility services on behalf of the region's 2.3 million residents. Those services include: managing the region's more than three million tonnes of solid waste. A current priority in waste management is to reduce the amount of waste generated, then to recover materials and energy whenever possible.

For more information on waste reduction, waste planning, public facilities and regulations, visit our website at www.metrovancouver.org.

INTRODUCTION

DECONSTRUCTION AND SALVAGE

CONSTRUCTION WASTE MANAGEMENT

DIRECTORY

APPENDICES

Introduction

Who is this toolkit for?

This Demolition, Land Clearing and Construction (DLC) Waste Toolkit is a reference guide for contractors, design professionals and building owners, to help them maximize the amount of construction and demolition waste diverted from disposal through salvage, reuse and recycling.

This toolkit is developed by Metro Vancouver's Sustainable Business Services as part of its BuildSmart program.

For further information contact
Sustainable Business Services:
Phone: 604-451-6575
Email: buildsmart@metrovancouver.org
Website: www.metrovancouver.org/buildsmart

Metro Vancouver Waste

Waste from the construction, demolition and renovation sectors constitutes about one third of the region's waste. Wood waste alone accounts for 22% of the waste disposed from residents and businesses. More than half of the construction and demolition related wastes are readily recyclable and do not need to go to disposal.

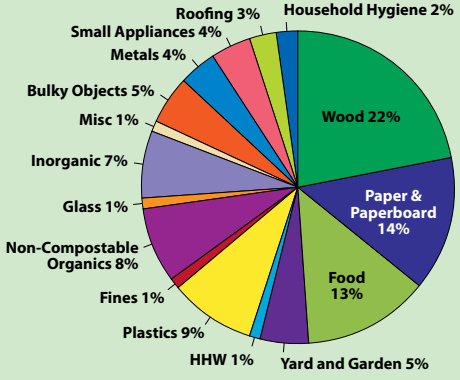

5 Five Great Reasons to Set Up a Construction Waste Management Program

Besides making a measurable difference in the amount of material being sent to a landfill there are other reasons for setting up a construction waste management program:

1. Compliance

The following materials are banned from landfills and other waste disposal facilities in Metro Vancouver:

- Corrugated cardboard
- Newsprint
- Office paper
- Blue box recyclables (including glass, metal and plastic Type 1, 2, 4 & 5 containers)
- Yard trimmings
- Gypsum drywall
- Electronic waste (personal computers, printers and TVs)
- Refundable beverage containers (all except milk cartons)
- Paint, solvents, flammable liquids, gasoline and pesticides
- Oil, oil filters and empty oil containers
- Lead-acid (car) batteries
- Medications/pharmaceuticals
- Tires

A surcharge of 50% will be applied to the tipping fee for waste loads delivered to Metro Vancouver transfer stations and disposal facilities found to contain 5% or more by volume of one or more of the banned materials.

What is the zero waste CHALLENGE?

In 2007, Metro Vancouver established the Zero Waste Challenge as part of the region's Solid Waste Management Plan to help increase the waste diversion rate from 52% to 70%.

The core goals of the Zero Waste challenge are:

- Minimize the generation of waste in the region
- Maximize reuse, recycling and energy recovery from solid waste

In addition to materials banned from disposal at Metro Vancouver and other local disposal facilities, a number of other materials have been restricted from disposal. A list of restricted materials at the City of Vancouver and Ecowaste (private) landfills and Metro Vancouver facilities is identified on pages 54 and 55.

Details available by contacting:
City of Vancouver landfill
Phone: 604-326-4600
www.vancouver.ca/engsvcs/solidwaste/landfill/index.htm

Ecowaste landfill
Phone: gatehouse 604-277-1410 or office 604-276-9511
www.ecowaste.com

Contractors must comply with the BC Hazardous Waste Regulation www.qp.gov.bc.ca/statreg/reg/E/EnvMgmt/EnvMgmt63_88/63_88_00.htm and Environmental Management Act www.qp.gov.bc.ca/statreg/stat/e/03053_00.htm and all other applicable laws and regulations.

Any hazardous or banned materials must be identified, properly removed, and disposed of by qualified persons prior to any salvage or demolition work.

Some examples of hazardous materials commonly found in building demolition projects include:

- Asbestos
- Underground storage tanks
- PCBs
- Abandoned chemicals such as solvents, paints, pesticides and gasoline
- Mercury switches

2. Reduced costs

Tipping fees for separated recyclables are considerably lower than mixed waste loads. Recycling cardboard and scrap metal should generate revenue. Over the course of a project these savings make good business sense for doing the right thing.

3. Marketing opportunity

Achieving high construction waste diversion rates provides a distinct marketing advantage for companies, as a growing number of customers are looking for contactors using environmentally responsible practices.

4. Certification

If your building project is seeking certification under a green building rating systems (see examples below), implementing an effective construction waste management plan is key.

Leadership in Energy and Environmental Design (LEED®) for New Construction awards – www.cagbc.org/leed/what/index.php

- Up to 3 points for reusing existing structures on-site
- Up to 2 points for diverting between 50% and 75% of demolition, land clearing and/or construction waste from the landfill and redirecting recyclables back to the manufacturing process and reusable materials to appropriate sites
- Up to 2 points for using 5% - 10% salvaged or reused building materials

BuiltGreen™ residential green building rating system awards – www.builtgreencanada.ca/

- More than 27 points are available for waste reduction initiatives on single family residential construction sites; a minimum of 7 points are required as part of the BuiltGreen™ designation
- Up to 4 points for reusing an existing structure
- Up to 16 points for waste reduction initiatives on single family residential construction sites
- 1 point for every salvaged building product used on the project

BOMA Go Green – www.bomagogreen.com/

- One of the program requirements under Waste Reduction and Recycling is to have a written policy on how building management intends to reduce construction waste sent to landfills

Some municipalities are implementing mandatory green building practices and/or compulsory construction waste management on job sites.

5. Reduced impact on the environment

Through waste reduction and more efficient use of resources, you will be reducing the impact from your project on the environment by:

- Conserving natural resources
- Reducing consumption of energy and water and creating less air pollution, green house gases and solid waste when extracting, transporting and manufacturing virgin materials.

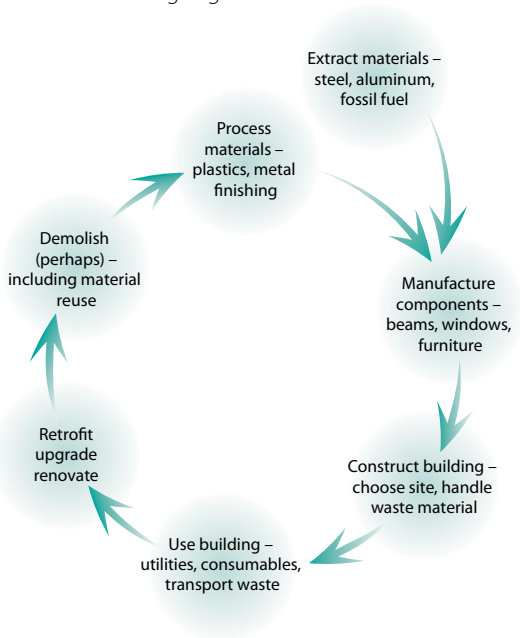

DECONSTRUCTION AND SALVAGE

Deconstruction and Salvage

Demolishing existing buildings by knocking them down and sending waste to landfill is no longer the most cost-effective and environmentally responsible option.

If your site has an existing structure that is slated for demolition, consider the following options:

Photo courtesy Nickel Bros. House Moving Ltd.

Selling or donating the structure for reuse at another location

If a building is at the end of its useful life, because it is no longer needed at the site it sits on, it could still be structurally sound and used on another site.

Deconstructing the building

Deconstruction is "construction in reverse"; it is the process of removing a building by selective disassembly of structural and non-structural building components. This process can yield a significant amount of valuable, reusable building materials.

Salvaging building materials for reuse in new construction

If the building is not to be deconstructed , you can still salvage valuable non-structural building components prior to demolition. This can include appliances, doors, hardwood flooring, light fixtures, siding, etc.

The following is a list of materials that can be salvaged for reuse and/or recycled from buildings slated for demolition:

Examples of Salvageable Building Materials	Examples of Recyclable Demolition Materials
Dimensional lumber	Structural concrete
Heavy timbers	Cinder blocks
Steel beams & studs	Asphalt pavement
Wainscoting	Dimensional lumber
Insulation	Metal piping
Siding	Gypsum wallboard
Heating ducts	Electrical cable
Electrical equipment	Aluminium siding
Brick & block	Metal window frames
Light fixtures	Rebar
Plumbing fittings	Cement based stucco
Faucets	Metal deck railings
Interior doors & frames	

Case Study – Township of Langley Civic Facility

The Township of Langley expanded and converted an existing three storey office building over ground floor parking to provide new municipal offices for Township of Langley staff, council chambers, recreation centre, library, and community police office.

The project involved reusing most of the existing building, carefully deconstructing the renovated areas, reusing a number of the materials on site (including insulation), and diverting 80 per cent of materials from going to landfill (see graph below).

Formwork plywood and dimensional lumber stacked for recycling

The project also involved strategic material selection, including use of 12% of materials with high levels of recycled content (by value), and use of 21% of materials that were manufactured locally.

Solid waste diversion

19% Waste

79% Recyclables

- 39% Concrete
- 19% Drywall
- 17% Commingled Recycables
- 4% Metals

2% Salvaged Materials

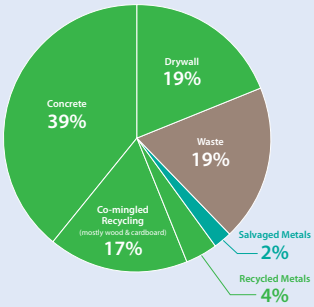

Township of Langley Photos: Hughes Condon Marler Architects

Recommended steps for salvage, reuse and recycling

The following steps are recommended to successfully reuse, salvage and recycle building structures:

1. Start planning for deconstruction early

Deconstruction is more labour-intensive than conventional demolition. Allowing salvage contractors the necessary time to deconstruct will result in more materials being salvaged and recycled. This reduces disposal costs and increases revenues from the sale of salvaged materials.

2. Consult a contractor

Consult a demolition and salvage contractor experienced in salvaging structural and non-structural building materials. Ensure that the contractor is professionally qualified, bonded and/or insured. Consult the Directory section on page 25 for a listing of demolition and salvage contractors.

3. Conduct an on-site audit to identify salvage and recycling opportunities

A team consisting of the owner, architect, general contractor and salvage and recycling specialist should survey the building for materials that can be salvaged and recycled. The amount and type of materials salvaged and recycled depends on:

- The time available to the contractor to do the work
- The type and size of building to be taken down
- The condition of the building
- The existing markets for the materials

4. Create a Deconstruction Plan

Ask your deconstruction contractor to draw up a plan specifying the work to be done, including:

- Assessment and abatement of hazardous and banned materials (see table below)
- Type and number of materials to be salvaged for reuse
- Quantities or volumes of materials to be separated for recycling
- On-site procedures for separating recyclables from other waste materials
- Site setup if materials are recycled on site
- Quantities or volumes of waste to be disposed of
- Name and address of used building materials yards, licensed recycling and disposal facilities accepting the materials generated by your project.

Hazardous materials typically found in buildings	Possible Source
Asbestos	Siding, pipe insulation, pipe tape, ceiling tile, drywall joint compound, vinyl sheet flooring, vinyl tiles, lag pipe, insulation asbestos board and linoleum
Underground Storage Tanks	Fuel tanks for heating/cooling systems. Look for fill and vent pipes. Should a tank be found during excavation, then work must cease until the tank, its contents and contaminated soils are remediated or removed as required
PCBs	Fluorescent lighting ballasts, power transformers, generators and other power supply and management equipment
Abandoned Chemicals	Paint, solvents, oils, cleaning products, flammable and combustible substances like gasoline, pesticides, herbicides, and medications
Others	Other hazardous materials may include Freon from cooling equipment and mercury switches

Source: City of Vancouver

For a listing of companies that test for, remove and properly dispose of hazardous materials ask your demolition or salvage contractor or check your phone book under Asbestos Abatement & Removal, Oil Tank Removal, Environmental Consultants & Services

Proper removal and disposal of hazardous materials are crucial for the health and safety of your workers, the community and environment. Ensure a hazardous materials survey is completed by a qualified professional prior to the start of any renovation or deconstruction work. For more information go to www2.worksafebc.com/Portals/Construction/HazardousMaterials.asp.

5. Monitor progress

Monitor the salvaging and recycling activities on an ongoing basis to ensure materials are salvaged, recycled and disposed of as specified. Make sure you keep a record of disposal receipts and credits from the sale of materials.

6. Evaluate your project to determine the outcome

Ask your demolition and salvage contractor to provide you with the following information:

- List and quantity of materials salvaged, recycled and disposed of
- The name and location of the recycling and disposal facilities
- A copy of receipts from recycling and disposal facilities and from material sales

Construction Waste Management

Construction of a New Building, Renovation or Expansion

These are the steps to take to set up a construction waste management (waste diversion and recycling) program:

STEP 1

Estimate your waste and recyclables

Based on the type and size of your project, estimate the type and quantity of waste materials that will be generated on site, using either waste disposal records from similar previous projects or the *Demolition, New Construction and Renovation Projects Waste Generation Rates* table on page 53.

STEP 2

Choose a recycling program that best fits your site

Decide what type of collection is appropriate for your site, and identify your hauling options.

Collection Options

Source separation is when recyclables such as clean wood, cardboard and scrap metal, are separated on-site and either put into separate bins, a dual (or multi) compartment bin, or stored in piles on the site. The bins are transported to recycling facilities by your contracted waste hauler or site workers.

Source separation

Commingled collection is when recyclable materials such as clean wood, cardboard and scrap metal are collected in one bin and taken to a recycling facility for sorting.

Commingled collection

Comparison of Source Separation and Commingled Recycling

	Pros	Cons
Source separation	• Lower tipping fees at recycling facilities • Revenue generation for recyclables such as cardboard and scrap metal • Higher recycling rates and more accurate account of each material recycled	• Multiple bins on-site • More sorting required
Commingled collection	• Fewer bins required – good for sites with space constraints • Less sorting required	• Lower recycling rates • Higher tipping fees at recycling facilities

Options for Space-Constrained Sites

Small sites can target materials at certain phases of construction.
For example, place a dedicated wood bin on site during the framing stage to collect the majority of the wood; and for the remainder of project use a commingled bin that includes collection of wood.

Request a "Front-end Bin" (instead of a "Roll-off Bin") from your waste hauler.
These can vary in size from 2 to 8 cubic yards. Front-end bins take up much less space than the more regularly used 40 yard waste containers.

Consider using a front-end bin to recycle office paper from the site office or cardboard.

Note: For offsite storage of construction bins permits are required in most municipalities (i.e. temporary storage on City streets and lanes).

Roll-off container

Recycling can represent cost savings in excess of 50%.
Make sure recyclable materials are separated properly; otherwise the recycling depot may reject the materials or charge you more.

Hauling Options

Contracting Hauling Services

Contracting a hauler to pick up recyclables generated on your site is the most convenient option. Most haulers can recommend the number and size of bins you will require, and might help you set up a job site recycling program.

Ask the following questions when looking for a hauler:

- What recyclable materials do you pick up?
- What are your requirements for separating recyclable materials?
- Do you provide commingled recyclable collection?
- How much contamination is acceptable for different waste streams?
- What type and size of bins do you offer?
- Does your company provide help on how to set up job site recycling and help educate the workers?
- Do you supply signs for recycling bins?
- Can you provide the itemized waybills and invoices which document the type and quantity of materials recycled, and where?

Approximate Hauling and Disposal Fees for Metro Vancouver (2007)

Type of waste	Cost (per 40 cubic yard bin)
Commingled recyclables*	$300 - $400
Wood	$300 - $400
Concrete/Asphalt	$325 - $450 (per 10 cu. yd. bin)
Garbage	$550 - $650

*Wood, metals and cardboard

Self-Hauling

Using company workers and trucks to collect and haul recyclable materials works best on smaller sites. Self hauling can reduce your costs and allow you to take advantage of lower fees—or in some cases, no fees—at recycling depots.

Approximate Recycling Fees at Metro Vancouver Area Facilities

Type of waste	Tipping Fee*	Revenue*
Wood waste	$14 - $40	
Cardboard		$70 - $90
Scrap metal (ferrous only)**		$60 - $120
Commingled recyclables	$40	
Construction waste disposal	$48 - $69	

*per metric tonne
**prices for non-ferrous metals vary by type of metal and amount

STEP 3

Create a Waste Management Plan

The waste management plan is a document that contains all the information needed by any worker on site to be able to achieve the project's waste diversion goals and targets. For more information see *Construction Waste Management Plan* on page 51.

STEP 4

Organize your recycling program

Designate a person who will be responsible for implementing the program and monitoring the site; for larger projects, this could be a waste management team.

This designated person will be responsible for:

Setup of the program on-site

- Be sure to locate recycling bins close to where materials are generated.
- Place recycling bins and garbage bins next to each other to prevent garbage, especially food waste, from ending up in recycling bins.

Note to contractors

Food waste and disposable food containers should NOT go in construction waste recycling bins. Construction waste loads contaminated with food waste may have a surcharge applied to them when received at recycling depots. Ensure small garbage bins are placed throughout the site for collection of food waste.

Use proper signage

- Use large, removable, weatherproof signs for all bins, which clearly show what belongs in each bin
- Post lists of what can and cannot be recycled in visible locations around the site

Educate all workers including subcontractors

- Workers are vital to the success of any recycling program. Communicate the importance of a job site construction waste management program to the company and the success of the project
- Use weekly site meetings to introduce the program and inform workers which materials to recycle, how to separate them, and where bins are located

Prevent contamination and monitor the program

- Inspect bins on a regular basis to identify contamination problems
- Remove contaminants from bins
- Schedule bin pick-up with haulers
- Consider using bins with lids or added security (fencing/locks) to avoid contamination or scavenging

Record keeping and reporting

- Collect and file recycling and disposal waybills and invoices for tracking volumes and costs

Where to take it?

See the directories in the following section for a list of salvage contractors, structural moving companies, local recycling depots and waste haulers.

Check our website for the most current information at:
www.metrovancouver.org/buildsmart

The following is a list of construction and demolition waste materials that can be recycled in Metro Vancouver.

Construction Waste Material	Includes	Reuse or Recycling Method
Existing vegetation	Shrubs, small trees, plants and sod	Replant on another site or on the same site at the landscaping stage
Landclearing debris	Stumps, branches, green waste	Can be chipped on site and used for mulch, or hauled to a recycling facility
Concrete/ Asphalt/ Aggregates	Structural concrete, cinder blocks, asphalt pavement, bricks, washout from mixer trucks	Crush on site and use as fill material or recycle
Wood	Forming lumber	Reuse on next project, sell or recycle
	Dimensional lumber off cuts, 2X4	Reuse on site or recycle
	Painted wood, composite	Reuse on site or recycle
	Pallets	Reuse or recycle if damaged (nails okay)
Gypsum	Gypsum wallboard off cuts	Recycle
Paper	Cardboard from packaging, office paper, newspaper	Recycle
Metals	Piping, aluminum siding, banding, wires, cable, rebar	Recycle
Beverage and food containers	Plastic, metal and glass bottles and containers	Recycle
Plastics	Empty pails and containers, plastic film, pipes	Recycle

DIRECTORY

Check our website for the most current information at:
www.metrovancouver.org/buildsmart

Directory of Deconstruction and Salvage Contractors and Used Building Materials Suppliers

Please call the listed companies for details on services and pricing.

	Deconstruction Services	Salvage Services	Used Building Materials Yard	Residential (R) or Commercial (C)	Comments
3R Demolition 5735 Beresford Street Burnaby www.3rdemolition.com 604-435-2555	◆	◆		Both	Online listing of available materials
Ace Demolition 20366 Wharf Street Maple Ridge www.acedemolitionsolutions.ca 604-780-4702	◆	◆		C	
Assertive Excavating and Demolition 264 - 19567 Fraser Hwy Surrey www.assertiveexcavating.com 604-888-6055	◆	◆		Both	
B-Line Appliance Recycling 776 Kingsway Vancouver 604-879-4050		◆	◆	Both	Rebuild, resell and recycle used appliances.
Bent Nail New & Used Building Supplies 31255 Wheel Avenue Abbotsford www.bentnail.org 1-877-850-2691	◆	◆	◆	Both	
Chilliwack New & Used Building Materials Inc. 44720 Yale Road West Chilliwack 1-604-792-7322		◆	◆	Both	

	Deconstruction Services	Salvage Services	Used Building Materials Yard	Residential (R) or Commercial (C)	Comments
D. Litchfield Demolition & Used Building Materials 3046 Westwood Street Port Coquitlam www.dlitchfield.com 604-464-7525	◆	◆		Both	Provide onsite aggregate recycling services. Contact company for a list of available materials.
Demco Disposal Service Ltd. 7987 Gilley Avenue Burnaby www.demolishers.com 604-433-5387	◆	◆		C	Online listing of available materials
Douglas Anthony Demolition Ltd. 2 - 1790 Kingsway Avenue Port Coquitlam www.dademolition.ca 604-433-5387	◆	◆		Both	
Fraser Trucking & Tractor Ltd. 9425 - 127 A Street Surrey 604-861-6087	◆	◆		Both	
Habitat for Humanity Abbotsford ReStore 12 - 34220 South Fraser Way Abbotsford www.vancouverhabitat.bc.ca 604-557-1020			◆	Both	
Habitat for Humanity Burnaby ReStore 2475 Douglas Road Burnaby www.vancouverhabitat.bc.ca 604-293-1898			◆	Both	
Habitat for Humanity Vancouver ReStore 69 West 69th Avenue Vancouver www.vancouverhabitat.bc.ca 604-326-3055			◆	Both	

	Deconstruction Services	Salvage Services	Used Building Materials Yard	Residential (R) or Commercial (C)	Comments
Impact Demolition 11-970 Westwood Street Coquitlam 604-552-0202		◆	◆		
Jack's New and Used 4912 Still Creek Avenue Burnaby 604-299-2967		◆	◆	Both	
Johnston & McKinnon Demolitions (1981) Ltd. 6038 Trapp Avenue Burnaby 604-526-0787	◆			C	
Mike's Marine Services 3871 River Road West Delta 604-946-9747		◆	◆	Both	
Pacific Labour & Demolition 6498 Marine Drive Burnaby www.pacificlabour.com 604-529-1011	◆	◆		Both	
Surrey New & Used Building Materials 17861 - 64th Avenue Surrey www.surreynewandused.com 604-576-8488		◆	◆	Both	
The Glass Station 1161 Kingsway Avenue Port Coquitlam www.glassstation.ca/recycling.htm 604-552-3738		◆	◆	Both	Only windows
Vancouver Timber Services Ltd. 225 Schoolhouse Street Coquitlam 604-202-1032					Specializes in reclaimed timber, wood flooring, and furniture.
Western Reclaimed Timber Corp. 11110 - 284th Street Maple Ridge www.westernreclaimed.com 604-462-8845	◆	◆	◆	Both	Specializes in reclaimed timber, wood flooring, and furniture.

Directory of Local Recycling Depots

These local public and private recycling depots are open to builders and demolition contractors. Depots will only accept separated recyclable materials unless indicated otherwise. Please always call ahead for drop-off details and hours of operation.

	Concrete & Asphalt	Cardboard	Drywall	Land Clearing Debris	Pallets	Scrap Metal	Wood	Mixed Construction Waste	Green Waste	Residential and/or Commercial loads	Comments
Abbotsford											
Abbotsford Community Services Recycling 33670 Valley Road www.abbotsfordcommunityservices.com/Recycling.htm 604-850-3551		◆				◆				R	
Columbia Lafarge 28371 Huntingdon Road www.lafarge-na.com 604-856-7794	◆									C	
Matsqui Transfer Station 33621 Valley Road www.metrovancouver.org/services/solidwaste/disposal/Pages/disposalfacilities.aspx 604-853-7560			◆			◆	◆		◆	Both	
Regional Recycling 750 Riverside Road www.regionalrecycling.ca/abbotsford.html 604-852-9152		◆				◆				Both	
Waste Services Inc. 34321 Industrial Way www.wasteservicesinc.com 604-857-1990	◆	◆	◆	◆	◆	◆	◆	◆	◆	Both	
Burnaby											
ABC Recycling 8081 Meadow Avenue www.abcrecycling.com 604-522-9727						◆				Both	
Burnaby Recycling Depot 4800 Still Creek www.city.burnaby.bc.ca/cityhall/departments/engnrn/engnrn_snttnr.html 604-294-7972		◆				◆			◆	Both	Truckloads are accepted depending on space available

	Concrete & Asphalt	Cardboard	Drywall	Land Clearing Debris	Pallets	Scrap Metal	Wood	Mixed Construction Waste	Green Waste	Residential and/or Commercial loads	Comments
Coquitlam											
Columbia Lafarge 2300 Rogers Avenue www.lafarge-na.com 604-521-8811	◆									C	
Coquitlam Construction Recycling Facility 1001 United Boulevard www.metrovancouver.org/services/solidwaste/disposal/Pages/disposalfacilities.aspx 604-526-6570					◆		◆		◆	Both	5-10% of wood in load can have paint, nails and rotted wood. No treated wood, furniture or plastic laminated materials
Coquitlam Transfer Station 1200 United Boulevard www.metrovancouver.org/services/solidwaste/disposal/Pages/disposalfacilities.aspx 604-521-1715		◆	◆			◆				Both	Large transports must make an appointment
Delta											
Basran Fuels 9486 River Rd. 540 Ewens Avenue 604-522-1628					◆		◆			Both	New construction wood waste only
Langley											
Cloverdale Fuel Ltd. 20408 - 102B Avenue www.cloverdalefuel.com 604-534-4313				◆	◆		◆	◆		Both	
Langley Transfer Station 1070 - 272nd Street, Aldergrove www.metrovancouver.org/services/solidwaste/disposal/Pages/disposalfacilities.aspx 604-856-3225		◆	◆			◆	◆		◆	R	Maximum vehicle size allowed is 1 tonne
Slater Iron & Salvage Co. Ltd. Hangar 18A 5225 - 216 Street www.slateriron.com 604-533-8522						◆				C	Materials must be worth $100 in value or greater
West Coast Metal Recycling R & P Metals 19841 - 57A Avenue www.westcoastmetalrecycling.com 604-534-3531						non-ferrous metals only				Both	

	Concrete & Asphalt	Cardboard	Drywall	Land Clearing Debris	Pallets	Scrap Metal	Wood	Mixed Construction Waste	Green Waste	Residential and/or Commercial loads	Comments
Maple Ridge											
Fraser Valley Metal Exchange 23359-A Fisherman Road www.fvme.com 604-467-7878						◆				Both	
Maple Ridge Transfer Station 10092 - 236th Street www.metrovancouver.org/services/solidwaste/disposal/Pages/disposalfacilities.aspx 604-466-9277		◆	◆				◆		◆	R	Maximum vehicle size allowed is 1 tonne
Ridge Meadows Recycling Society 10092 - 236th Street www.rmrecycling.org 604-463-5545		◆				◆				Both	
New Westminster											
New West Gypsum Recycling 38 Vulcan Street www.nwgypsum.com 604-520-6647			◆							Both	
New Westminster Recycling Depot 65 East 6th Ave (corner of 6th & McBride) www.newwestcity.ca/cityhall/operations/recycling/index.html 604-968-4208		◆				◆			◆	R	
Urban Wood Waste Recyclers 4 Spruce Street www.uwwr.com 604-527-4060	◆	◆		◆	◆	◆	◆	◆		C	
North Vancouver											
B.A. Blacktop Ltd. 6 Riverside Drive www.bablacktop.com 604-929-7974	◆									Both	
North Shore Recycling Depot 75 Riverside Drive www.nsrp.bc.ca 604-981-3124		◆								Both	Small commercial volumes. Call ahead to verify.

	Concrete & Asphalt	Cardboard	Drywall	Land Clearing Debris	Pallets	Scrap Metal	Wood	Mixed Construction Waste	Green Waste	Residential and/or Commercial loads	Comments
North Shore Transfer Station (Wastech) 30 Riverside Drive www.metrovancouver.org/services/solidwaste/disposal/Pages/disposalfacilities.aspx 604-929-5471			◆			◆	◆		◆	Both	
Pitt Meadows											
Fraser Richmond Soil & Fibre Ltd. 12620 Woolridge Road www.fraserrichmond.ca 604-220-2385				Small Diameter					◆	Both	
Richmond											
Allied Salvage & Metals (1985) Ltd. 11651 Twigg Place (Mitchell Island) www.alliedsalvagemetals.com 604-322-6629						◆				Both	
City of Richmond Recycling Depot 5555 Lynas Lane www.richmond.ca/services/recycling/services/depot.htm 604-276-4010		◆				◆			◆	R	
Columbia Lafarge 13340 Mitchell Road (Mitchell Island) www.lafarge-na.com 604-324-3591	◆									C	
Inner City Recycling 11640 Twigg Place (Mitchell Island) 604-327-0957	◆	◆		◆	◆	◆	◆	◆		C	
Mainland Sand and Gravel 124500 No. 5 Road 604-271-2555	◆									Both	
Regional Recycling 13300 Vulcan Way www.regionalrecycling.ca/richmond.html 604-276-8270		◆				◆				Both	
Richmond Steel Recycling Ltd. 11760 Mitchell Road (Mitchell Island) 604-324-4656						◆				Both	

	Concrete & Asphalt	Cardboard	Drywall	Land Clearing Debris	Pallets	Scrap Metal	Wood	Mixed Construction Waste	Green Waste	Residential and/or Commercial loads	Comments
Richvan Holdings Ltd. 15300 River Road 604-270-8922	◆									C	
Western Gypsum Recyclers 11610 Twigg Place (west side of Mitchell Island) 604-325-3299			◆							Both	No demolition gypsum or with tiles attached; new gypsum only
Surrey											
A-Topco Pallet Recycling Ltd. Unit 8 - 10619 Timberland Road 604-582-2020					◆					Both	
METRO Materials Recovery 12345 - 104th Avenue www.metrowaste.com 604-589-4385		◆								C	
RDM 10255 Timberland Rd. www.rdmenterprises.com 604-580-6211	◆									Both	Accepts rocks
Rypac Aluminum Recycling Ltd. 11849 Tannery Road www.rypacmetalrecycling.com 604-580-7471						non-ferrous metals only				Both	Minimum 100kg loads
Scott Road Trading Ltd. 12855 King George Highway www.scottroadtrading.com 604-580-0771		◆				◆				Both	
Slater Iron & Salvage Co. Ltd. 19355 - 54th Ave www.slateriron.com 604-533-8522						◆				C	
Super Save Disposal 12683 - 116th Ave www.supersave.ca 604-594-8901	◆	◆			◆	◆	◆	◆		C	
Surrey Transfer Station 9770 192nd Street www.metrovancouver.org/services/solidwaste/disposal/Pages/disposalfacilities.aspx 604-513-2409		◆	◆			◆	◆		◆	R	

	Concrete & Asphalt	Cardboard	Drywall	Land Clearing Debris	Pallets	Scrap Metal	Wood	Mixed Construction Waste	Green Waste	Residential and/or Commercial loads	Comments
Vancouver											
Capital Salvage 1919 Triumph Street 604-253-8481						◆				Both	
City of Vancouver Transfer Station and Recycling Depot 377 West Kent Avenue North www.vancouver.ca/engsvcs/solidwaste/transfer/index.htm 604-326-4600		◆				◆			◆	R	
Davis Trading Ltd. 1100 Grant Street www.davistrading.ca 604-255-3111						non-ferrous metals only				Both	
METRO Materials Recovery 8325 Main Street www.metrowaste.com 604-327-5272		◆								C	
North Star Recycling 1170 Powell Street 604-254-2734						non-ferrous metals only				Both	
Pacific Metals Ltd. 8360 Ontario Street www.pacificmetals.ca 604-327-1148		◆				◆				C	
Recycling Alternative 360 Industrial Avenue www.recyclingalternative.com 604-874-7283		◆								Both	
Regional Recycling 960 Evans Avenue www.regionalrecycling.ca/vancouver.html 604-689-4722		◆								Both	
Urban Wood Waste Recyclers 110 East 69th Avenue www.uwwr.com 604-327-5052	◆	◆		◆	◆	◆	◆	◆		C	

Directory of Hauling Services

The listed haulers pick up separated recyclable materials from construction and renovation sites in the Lower Mainland. Where indicated, haulers pick up mixed waste for offsite sorting.

	Materials					Materials		Service			
	Concrete & Asphalt	Cardboard	Drywall	Land Clearing Debris	Scrap Metal	Wood & Pallets	Mixed Construction Waste	Dual Bin	Commingled Recyclables Bin	Residential and/or Commercial	Comments
ABC Recycling Burnaby www.abcrecycling.com 604-522-9727					◆					C	
Allied Salvage & Metals (1985) Ltd. Richmond www.alliedsalvagemetals.com 604-322-6629					◆					Both	
Annacis Waste Disposal Corp. Delta www.annaciswaste.com 604-594-7848	◆	◆	◆		◆	◆	◆			Both	Handle hazardous materials such as asbestos
BFI Canada Coquitlam www.bficanada.com 604-525-2072	◆	◆	◆	◆	◆	◆	◆			Both	
Capital Salvage Vancouver 604-253-8481					◆					Both	
City Haul Disposal Vancouver 604-731-3100	◆	◆	◆		◆	◆	◆			Both	Loading service only, do not provide bins
Cloverdale Fuel Co. Langley www.cloverdalefuel.com 604-534-4313				◆		◆	◆			Both	
Davis Trading Ltd. Vancouver www.davistrading.ca 604-255-3111					non-ferrous metals only					C	

	Materials					Materials		Service			
	Concrete & Asphalt	Cardboard	Drywall	Land Clearing Debris	Scrap Metal	Wood & Pallets	Mixed Construction Waste	Dual Bin	Commingled Recyclables Bin	Residential and/or Commercial	Comments
First Choice Waste Disposal Ltd. Surrey 604-888-6122	◆	◆	◆		◆	◆	◆			C	
Fleetwood Disposal Ltd. Burnaby 604-294-1393	◆	◆	◆	◆	◆	◆	◆			Both	
Fraser Valley Metal Exchange Maple Ridge www.fvme.com 604-467-7878					◆					Both	
Fresh Start Recycling & Disposal Vancouver www.freshstartrecycling.com 604-637-6400	◆	◆	◆		◆		◆			Both	Service mostly renovation contractors, building managers and homeowners
Maple Leaf Disposal Ltd. Coquitlam www.mapleleafdisposal.com 604-540-4992	◆	◆	◆	◆	◆	◆	◆		◆	C	
Mark's Disposal Service Vancouver www.skinnybins.com 604-261-6198	◆	◆	◆	◆	◆	◆	◆			Both	Bins designed for narrow lanes and streets
Mini Bin BC Vancouver www.minibinbc.ca 604-552-2467	◆	◆	◆	◆	◆	◆	◆			Both	
Mini-Load Disposal Ltd. Burnaby 604-431-7701						◆	◆		◆	Both	
North Star Recycling Vancouver 604-254-2734					non-ferrous metals only					C	
Northwest Waste Systems Coquitlam 604-524-4042	◆	◆	◆	◆	◆	◆	◆			C	

	Materials					Materials		Service			
	Concrete & Asphalt	Cardboard	Drywall	Land Clearing Debris	Scrap Metal	Wood & Pallets	Mixed Construction Waste	Dual Bin	Commingled Recyclables Bin	Residential and/or Commercial	Comments
Prompt Waste Management Langley www.promptwaste.com 1-877-853-0487	◆	◆	◆	◆	◆	◆				Both	
Pacific Metals Ltd. Vancouver www.pacificmetals.ca 604-327-1148		◆			◆					C	
Recycling Alternative Vancouver www.recyclingalternative.com 604-874-7283		◆								Both	
Richmond Steel Recycling Ltd. Richmond 604-324-4656					◆					C	
Rypac Aluminum Recycling Ltd. Surrey www.rypacmetalrecycling.com 604-580-7471					non-ferrous metals only					C	Pick up loads over 200 kg
Scott Road Trading Ltd. Surrey www.scottroadtrading.com 604-580-0771		◆			◆					C	
Smithrite Disposal Ltd. Coquitlam www.smithrite.com 604-529-4030	◆	◆	◆	◆	◆	◆	◆			Both	
Super Save Waste Systems Inc. Surrey www.supersave.ca 604-533-4423	◆	◆	◆	◆	◆	◆	◆		◆	Both	
Urban Impact Recycling Ltd. Richmond www.urbanimpact.com 604-273-0089		◆		◆	◆	◆	◆		◆	Both	

	Materials					Materials		Service			
	Concrete & Asphalt	Cardboard	Drywall	Land Clearing Debris	Scrap Metal	Wood & Pallets	Mixed Construction Waste	Dual Bin	Commingled Recyclables Bin	Residential and/or Commercial	Comments
Waste Management of Canada Coquitlam www.wmcanada.com 604-520-7800	◆	◆	◆	◆	◆	◆	◆		◆	C	
Waste Services Inc. Abbotsford www.wasteservicesinc.com 604-857-1990		◆	◆	◆	◆	◆	◆			Both	
Wescan Disposal Coquitlam www.wescandisposal.com 604-526-9511	◆	◆	◆	◆	◆	◆	◆			Both	
West Coast Metal Recycling Langley www.westcoastmetalrecycling.com 604-534-3531					non-ferrous metals only					Both	
Western Material Recovery Richmond 604-325-3299			◆							C	
West Coast Metal Recycling Langley 604-534-3531					non-ferrous metals only					C	
Western Gypsum Recycling Richmond 604-325-3299			◆							C	

NOTES

APPENDICES

Summary of Roles

The following is a summary of the roles that all parties must play to maximize the amount of construction and demolition waste that is diverted from disposal.

General Contractor

- Estimate waste generation, salvage and recycling opportunities
- Identify a recycling program that is best suited for the site
- Select a waste hauler with experience in job site recycling
- Setup the program on site
- Educate workers
- Monitor waste management program day-to-day
- Record keeping and reporting

Developers, Property Owners and Managers

- Make waste reduction a priority from the start of the project
- Set waste diversion goals for the project
- Support the waste management program, during the duration of the project

Architects/Designers

- At the design stage try to prevent waste by:
  1. Selecting standard sizes for all building materials to minimize waste on site (i.e. off cuts)
  2. Designing spaces that would be flexible to changing uses
  3. Designing for deconstruction
- Identify material reuse and waste reduction opportunities
- Select a contractor with established experience in job site recycling
- Include a construction waste management specification
- Write a waste management plan
- Monitor the job site recycling program
- Report on the program's success

Construction Waste Management Plan

A construction waste management plan is a document that contains all the information needed by any worker on site to be able to achieve the project's goals and targets. A sample construction waste management plan is available in Metro Vancouver's LEED for Contractor's Guide at http://www.metrovancouver.org/about/publications/Publications/greenconstructionLEEDforcontractors08.pdf.

The plan needs to contain information about:

1. **Project's waste diversion goals and targets goals**.
2. **Name(s) and contact information** of person(s) responsible for waste management on site.
3. An estimate of the **types and quantities of materials** generated.
4. List of **how and where** each material will be removed and salvaged or recycled.
5. **Costs and revenues** from salvaged and recycled materials.
6. **Methods and techniques** for collecting, separating and recycling materials.
7. **Methods of assessment**, abatement and safe disposal of hazardous materials.
8. **Plans for training, meetings and other communications** related to job site waste management, including:
   - Procedures for educating workers and sub-contractors
   - Site setup and identification of collection areas
9. **Troubleshooting instructions and contact information** for:
   - Waste haulers
   - Used building materials yards
   - Licensed recycling and disposal facilities
10. **Reporting and record keeping** including:
    - Collect and record all cost and revenue data
    - Calculate waste diversion rate
    - Report on any new opportunities, not previously identified, to minimize waste on site through reuse, salvage or recycling

Construction and Deconstruction Projects Material Inventory Form

This form can be used to track and report construction and/ or deconstruction waste management amounts.

To download a full-size PDF version of this inventory form that you can print out and use, visit www.metrovancouver.org/buildsmart.

Company Name	Contact Person	Phone
Project Site/Location	**Project Type** ❑ New Construction ❑ Renovation ❑ Partial Deconstruction ❑ Complete Deconstruction	**Estimated Completion Time**
Building Construction ❑ Combustible ❑ Noncombustible ❑ Combination (SPECIFY:_____)	**Building Type** ❑ Residential ❑ Commercial ❑ Industrial	**Total Area** (SQ.FT. OR SQ.M.)

Pre-Project Audit		Project Summary For period: to				
Material	Estimated Generation	Salvaged	Recycled	Disposed	Facility	Remarks/Comments
Signature		Title			Date	

EXPLANATORY NOTES:

Column 1 **Material**: enter materials targeted for salvage, recycling, and/or disposal

Column 2 **Estimated Generation**: enter the estimated volumes, quantities, or number of salvageable, recyclable, and waste materials generated (e.g., cu. yd. tonnes, board ft.)

Columns 3, 4 & 5 **Salvaged, Recycled and Disposed**: enter the volumes, quantities, or number of materials handled (e.g., cu. yd. tonnes, board ft.)

Column 6 **Facility**: enter the end-destination of salvaged, recycled, and disposed materials

Column 7 **Remarks/Comments**: enter any additional comments or details as required

Demolition, New Construction and Renovation Projects Waste Generation Rates

Type of Building	Activity*	Waste Generation Rates	Composition (by weight)					
			WOOD	DRYWALL	METALS	CONCRETE/ ASPHALT	CORRUGATED CARDBOARD	MISC.
Residential	D	Single Family 547 kg/m² (111 lbs/sq ft) (including concrete)	44%	2%	3%	25%	-	26%
		Multi-Family 626 kg/m² (127 lbs/sq ft)						
	NC	Single Family 23.7 kg/ kg/m² (4.8 lbs/sq ft)	65%	21%	1%	2%	2%	9%
		Multi-Family 16.3 kg/m² (3.3 lbs/sq ft)						
	R	84 kg/m² (17 lbs/sq ft)*	Renovation waste is highly variable in its make-up depending on the type and extent of renovation work undertaken					
Commercial	D	764 kg/m² (155 lbs/sq ft)	16%	-	5%	68%	-	11%
	NC	Low-rise 12.3 kg/m² (2.5 lbs/sq ft)	60%	4%	-	-	12%	24%
		High-rise 51.7 kg/m² (10.5 lbs/sq ft)	9%	19%	2%	38%	-	32%
	R	39 kg/m² (8 lbs/sq ft)**	Renovation waste is highly variable in its make-up depending on the type and extent of renovation work undertaken					

D: Demolition
NC: New Construction
R: Renovation

* This is an average calculated from a wide range of renovation projects such as kitchen, bathroom, deck and roof
** This rate was calculated from a range or commercial retrofits and tenant improvement projects

Source: Squamish-Lillooet Regional District Construction and Demolition Waste Management Study, October 2003
Characterization of Building-Related Construction and Demolition Debris in the United States, June 1998

Prohibited/Restricted Wastes at Local Landfills and Transfer Stations

List of Prohibited Wastes at the Ecowaste Landfill*

www.ecowaste.com

- Hazardous wastes as defined by the Hazardous Waste Regulation of the BC Environmental Management Act
- Semisolid sludge or liquid wastes
- Automobiles, white goods, household appliances, metallic car parts, large metallic objects, tires (other than small utility tires which can not be recycled)
- Food wastes or other putrescible refuse or dead animals
- Bulk quantities of waste paper, newspaper and corrugated cardboard
- Gypsum board in excess of 1% of any individual load (5% in the case of fire damaged materials)
- Excavation material and/or soil, unless pre-approved. Soils of residential or industrial quality based on the applicable numerical soil standards in the Contaminated Sites Regulation are acceptable. Certain soils with contamination levels above the industrial level ("Waste Soil") may be accepted on a case by case basis
- Asbestos or materials containing asbestos
- Concrete with heavy rebar

Restricted Materials at Metro Vancouver disposal sites

www.metrovancouver.org/services/solidwaste/disposal/Pages/bannedmaterials.aspx

- Appliances (washers, dryers, refrigerators and more)
- Asbestos
- Compact fluorescent bulbs
- Fluorescent tubes
- Milk containers (includes soy & rice milk)
- Rechargeable batteries
- Sod
- Odourous and dusty loads
- Propane tanks

*partial list only; call for more information

List of Prohibited Wastes at the Vancouver Landfill

www.vancouver.ca/engsvcs/solidwaste/landfill/index.htm

- Hazardous wastes (i.e. pathogenic and radioactive materials)
- Hazardous wastes as defined by the Hazardous Waste Regulation of the BC Environmental Management Act
- Biomedical waste, including sharps
- Paint
- Liquid wastes and sludges
- Explosive substances
- Chemicals or other materials which may create hazardous working conditions
- Inflammable materials
- Materials hot enough to start combustion
- Automobile bodies
- Boat hulls longer than 30 ft, and/or containing any metals or oils (fibreglass and wood parts are accepted for disposal only)
- Dead animals and animal parts including bones, feathers, skin, hair, nails and teeth (excluding processed meat)
- All forms of excrement
- Barrels, drums and other large liquid containers, whether full or empty
- Lumber, timber, logs, etc., longer than 3.6m (12ft)
- Solid objects larger in cross section than 3500 cm2 (3.8ft2) if longer than 2.5m (8ft)
- Fabricated objects wider or thicker than 1.2m (4ft) and longer than 2.5m (8ft)
- Soil with contaminant levels exceeding Urban Park standards defined by the Contaminated Sites Regulation of the Environmental Management Act
- Coated or uncoated wire or cable in excess of 1% by weight of any load
- Commercial loads of dry cell batteries
- Materials accepted for recycling at the landfill
- Asbestos and materials containing asbestos that are not double-bagged
- Desktop computers, computer monitors, notebook computers, desktop printers and fax machines, and televisions

Note: A 50% surcharge may be assessed on garbage loads containing banned materials in excess of 5% or more by volume (see list on page 5).

NOTES

Thank you to the following people who provided input and reviewed the toolkit.

Corinne Fulton
3R Demolition

Jennifer Lukianchuk
City of New Westminster

Jenniffer Sheel
City of Vancouver

Neil McCreedy
City of Vancouver

Dale MacDonald
Dominion Construction

Shane Van Vliet
Double V Construction Ltd.

Amy Spencer-Chubey
Greater Vancouver Home Builders Association

Peter Simpson
Greater Vancouver Home Builders Association

Daniel Roberts
Kane Consulting

Joanne McCran
Light House Sustainable Building Centre

BUILDSMART

Metro Vancouver's source for sustainable building information

For more information, or to browse the online sustainable products and services directory, please visit

www.metrovancouver.org/buildsmart

Contact a Business Advisor at 604-451-6575 or email buildsmart@metrovancouver.org.

zero waste CHALLENGE

For information on the Zero Waste Challenge or for guidance on how to move your business towards sustainability, please visit

www.metrovancouver.org

Printed in Canada using vegetable-based inks on recycled paper using 100% post-consumer waste.

metro vancouver

www.metrovancouver.org

1st Printing: 2000/AUG08

APPENDIX C

2007-2010 Community Liaison Activities and Input Report

2007-2010 Community Liaison Activities and Input

Deltaport Third Berth Project

Table of Contents

1.0 Introduction

1.1 Overview

The development of the Deltaport Third Berth Project (DP3) was a Port Metro Vancouver (PMV) and TSI Terminal Systems Inc. (TSI) initiative to expand existing container operations at the Deltaport container terminal at Roberts Bank, in Delta, B.C. DP3 is part of PMV's overall strategy to expand container capacity at the Port to accommodate consumer and business-driven demand for increased Canadian trade through the west coast of Canada.

The development of DP3 increased capacity at Deltaport by approximately 600,000 TEUs (twenty-foot equivalent units) by adding a third berth and 20 hectares of container storage facilities to the existing two-berth container terminal. This third berth at Deltaport is operated by TSI, a private company that operates the existing Deltaport container terminal.

DP3 officially opened in January 2010. Construction for the Deltaport Third Berth Project began in January 2007, with the commencement of dredging and marine works. The terminal construction was completed in late 2009. The environmental habitat compensation work is scheduled for completion in early 2011.

Community consultation during the construction and first-year operation of DP3 occurred as per the *Deltaport Third Berth Project: Community Liaison Plan - Construction and First Year Operation Phase*, a document prepared by PMV to provide an overview of DP3 community consultation activities. Please see section 1.4 for more information regarding the Community Liaison Plan.

1.2 Federal and Provincial Regulatory Review Process

DP3 required provincial approval under the *British Columbia Environmental Assessment Act* and federal approvals following a review under the *Canadian Environmental Assessment Act*. The provincial and federal review processes identified potential environmental, economic, social, heritage and/or health impacts and defined how these would be avoided or mitigated.

The Project was comprehensively reviewed by federal and provincial government

agencies through a single harmonized environmental assessment process facilitated by the B.C. Environmental Assessment Office (EAO) and was open to the full participation of stakeholders and the general public.

On September 29, 2006, Port Metro Vancouver received a provincial environmental assessment certificate from the EAO for the Deltaport Third Berth Project. The federal Minister of the Environment and the Minister responsible for the Canadian Environmental Assessment Agency (CEAA) announced on November 3, 2006 that the proposed Deltaport Third Berth Expansion Project was unlikely to cause significant adverse environmental effects. On December 19, 2006, PMV received authorization under the *Fisheries Act* to allow construction on the Project to commence.

The Project Compliance Report for DP3 was submitted on November 13, 2009 to the EAO. On December 1, 2009, the EAO confirmed DP3 was in compliance with the Environmental Assessment Certificate and could proceed to commence operation.

1.3 EAO Table of Commitments and Assurances

As part of its environmental assessment report on the Deltaport Third Berth Project, the B.C. Environmental Assessment Office (EAO) issued the Owner's Table of Commitments and Assurances, a series of commitments to responsible environmental management and other measures.

During the three years of DP3's construction phase, as well as its first year of its operation, PMV reported to the EAO and the working group (composed of various provincial and federal regulatory agencies, First Nations groups, municipalities and other stakeholders) on the status of these commitments.

Updated versions of the Owner's Table of Commitments and Assurances are also uploaded to the Project website, as they became available. Updates to the Owner's Table of Commitments and Assurances will be provided on a semi-annual basis as the majority of commitments are complete. The next update to the Table will occur in February 2011.

1.4 Community Liaison Plan

On December 12, 2006, PMV issued the Deltaport Third Berth Project: Community Liaison Plan - Construction and First Year Operation Phase (the Plan) to provide the public with an overview of the community liaison activities planned for the construction and first year of operations of DP3. The Plan integrated the consultation and communications commitments made in the Owner's Table of Commitments and Assurances.

Activities within the Plan focused on communications and consultation with Delta stakeholders, including the Corporation of Delta, residents, special interest groups, First Nations and other stakeholders. The Plan's goals were:

- To provide an open and interactive consultation process that considers local, regional and provincial interests;
- To foster community support for the Project;
- To strengthen ongoing relations with local community interests; and
- To integrate the commitments and assurances identified in the Environmental Assessment Report APPENDIX E.

The Plan was designed to allow for ample opportunity to review Project information and provide meaningful input.

Input obtained through community liaison activities was considered advisory in nature, and was incorporated into Project design and construction and operation whenever it was reasonable to do so. Input regarding PMV activities other than those involved in DP3 was addressed using appropriate PMV resources.

The Plan was amended once, on April 23, 2009.

2.0 Community Liaison Activities

During the development and first-year operation of DP3, PMV was committed to working with the community of Delta to identify issues and minimize impacts related to the Project.

From 2007-2010, PMV undertook the following consultation and communications activities as described in the Deltaport Third Berth Project – Community Liaison Plan:

- Twenty-seven (27) meetings of the Deltaport Third Berth Project Community Liaison Committee;
- Fourteen (14) public information sessions to provide Project updates;
- One (1) open house to provide an opportunity for public see the project first-hand;
- Eight (8) newsletters (two per year) delivered to all residential and business addresses in Delta, e-mailed to the Project database and posted on DP3 webpage;
- Forty-one (41) Project advisories/updates via email circulation to over 580 individuals on the project database and postings on the DP3 webpages;
- Regularly updated project resource binders at community libraries;
- Development and maintenance of a regularly updated public comment and issues tracking table;
- Maintaining contact and feedback mechanisms (Project information line, e-mail address, facsimile line and mailing addresses).

The following sections provide details of these key activities.

2.1 Community Liaison Committee

Overview

The Deltaport Third Berth Project Community Liaison Committee (DCLC) consisted of up to 18 individuals representing residents, community associations and businesses in Delta, as well as port stakeholder groups.

The purpose of the committee was to work with PMV during the construction and first-year operation of the third berth at Deltaport to identify community concerns, develop potential solutions to address those concerns and assist in communicating information among the community, PMV and other port stakeholders.

Terms of Reference

PMV developed the DCLC Terms of Reference on December 8, 2006 and the DCLC revised them on April 4, 2007, April 20, 2007 and April 24, 2008.

Meetings

A total of twenty-seven DCLC meetings occurred since the Committee's inception. Meeting dates were as follows.

DCLC Meeting 1	March 22, 2007
DCLC Meeting 2	April 19, 2007
DCLC Meeting 3	May 1, 2007
DCLC Meeting 4	June 26, 2007
DCLC Meeting 5	July 3, 2007
DCLC Meeting 6	September 6, 2007
DCLC Meeting 7	October 25, 2007
DCLC Meeting 8	November 29, 2007
DCLC Meeting 9	January 17, 2008
DCLC Meeting 10	February 28, 2008
DCLC Meeting 11	April 24, 2008
DCLC Meeting 12	June 26, 2008
DCLC Meeting 13	August 28, 2008
DCLC Meeting 14	October 23, 2008
DCLC Meeting 15	November 27 2008
DCLC Meeting 16	January 22, 2009
DCLC Meeting 17	February 19, 2009
DCLC Meeting 18	April 16, 2009
DCLC Meeting 19	June 18, 2009
DCLC Meeting 20	September 17, 2009
DCLC Meeting 21	November 26, 2009
DCLC Meeting 22	January 21, 20010
DCLC Meeting 23	March 30, 2010
DCLC Meeting 24	May 27, 2010
DCLC Meeting 25	June 24, 2010
DCLC Meeting 26	September 23, 2010
DCLC Meeting 27	December 2, 2010

Presentations

Presentations were provided to DCLC during their scheduled meetings, as follows:

Truck Licensing System	October 25, 2007
Highway 17 Improvements	October 25, 2007
DP3 Scientific Advisory Committee	January 27, 2008
Roberts Bank Rail Corridor Update	April 24, 2008.
BCRC Port Sub Presentation	June 26, 2008
Land Operations at Port Metro Vancouver	August 28, 2008
Adaptive Management Strategy 2007	October 23, 2008
Construction Environmental Monitoring	October 23, 2008
Overview of DP3 Monitoring	October 23, 2008
Marine Mammal Monitoring Program	October 23, 2008
DP3 Terminal Lighting	November 27, 2008
March 14, 2009 PMV Information Session	April 16, 2009
Trucking Safety – Deltaport Way	June 18, 2009
DCLC Truck Traffic Subcommittee	September 17, 2009
2008 AMS Annual Report	November 26, 2009
Traffic Management Plan	November 26, 2009
Smart Corridors – Roberts Bank Pilot Project	January 21, 2010

Fact Sheets

At the request of DCLC, PMV prepared four fact sheets in response to frequently asked questions.

Air Quality	October 2007 (updated November 26, 2007)
Wildlife	November 2007 (updated December 4, 2007)
Highway 17	November 6, 2007
Lighting	September 1, 2008

Subcommittees

DCLC established four subcommittees to address issues involving each of the following four areas:

- Traffic impacts from DP3
- Noise impacts from DP3
- Lighting impacts from DP3
- DP3 communications

The subcommittees met when a greater understanding of these particular issues was needed. The subcommittee objectives were to review these issues and to work to develop recommendations to be passed onto DCLC.

2.2 Information Sessions

Overview

The purpose of the information sessions were to provide the community with an opportunity to find out about the status of DP3; to give community members an opportunity to speak to Project staff and members of DCLC; and to receive input and provide feedback on the project. PMV hosted fourteen information sessions as follows:

- May 29, 2007, Delta (Delta Town and Country Inn, 20 attendees)
- May 31, 2007, Tsawwassen (Coast Tsawwassen Inn, 29 attendees)
- Nov. 24, 2007, Delta (Delta Town and Country Inn, 65 attendees)
- May 29, 2008, Tsawwassen (Coast Tsawwassen Inn, 43 attendees)
- December 2, 2008 Tsawwassen (Tsawwassen Golf and Country Club, 49 attendees)
- March 14, 2009 in Tsawwassen (Tsawwassen Centre Mall, spoke with 54 individuals)
- May 30, 2009 in Tsawwassen (Tsawwassen Centre Mall, spoke with 50 individuals)
- June 27, 2009 in Tsawwassen (Tsawwassen Centre Mall, spoke with 38 individuals)
- July 12, 2009 in Ladner (Ladner Village Markey, spoke with 236 individuals)
- November 27, 2009 in Tsawwassen (Tsawwassen Centre Mall, spoke with 30 individuals)

- November 29, 2009 in Ladner (Ladner Save-on-Foods, spoke with 115 individuals)
- June 5, 2010 in Tsawwassen (Tsawwassen Centre Mall, spoke with 42 individuals)
- June 12, 2010 in Tsawwassen (Tsawwassen Centre Mall, spoke with 39 individuals)
- June 13, 2010 in Ladner (Market Village, spoke with 303 individuals)

Additionally, PMV and TSI hosted an open house at the Deltaport Container Terminal on June 26, 2010, which was attended by approximately 3,000 individuals.

Project resource staff and members of the Deltaport Third Berth Project Community Liaison Committee (DCLC) were available to speak to the public at these information sessions. Project resource staff and DCLC members handed out newsletters and backgrounders to passers-by, asked them verbal questions, and recorded their input. Information boards also were developed for display. Additionally, passers-by were asked to fill out a questionnaire regarding DP3.

Brief summaries of the information sessions and open house were developed following these events. Issues raised in information session comment forms or during discussion with project resource staff and DCLC members were documented and responded to in Issue Tracking and Response Tables. (Refer to Section 2.6)

Advertisements

Advertisements in local newspapers provided notification of the information sessions and open house. The ad placement schedule was as follows:

May 29/31, 2007 public information sessions:

Date	Newspaper
May 18, 2007	South Delta Leader
May 19, 2007	Delta Optimist
May 25, 2007	South Delta Leader
May 25, 2007	Surrey/North Delta Leader
May 26, 2007	Delta Optimist

November 24, 2007 public information session:

Date	Newspaper
November 16, 2007	South Delta Leader
November 17, 2007	Delta Optimist
November 21, 2007	Delta Optimist
November 21, 2007	Surrey/North Delta Leader
November 23, 2007	South Delta Leader
November 23, 2007	Surrey/North Delta Leader
November 24, 2007	Delta Optimist

May 29, 2008 public information session:

Date	Newspaper
May 16, 2008	South Delta Leader
May 17, 2008	Delta Optimist
May 21, 2008	Delta Optimist
May 23, 2008	South Delta Leader
May 23, 2008	Surrey/North Delta Leader
May 24, 2008	Delta Optimist
May 25, 2008	Surrey/North Delta Leader
May 28, 2008	Delta Optimist

December 2, 2008 public information session:

Date	Newspaper
November 19, 2008	Delta Optimist
November 21, 2008	South Delta Leader
November 22, 2008	Delta Optimist
November 23, 2008	Surrey/North Delta Leader
November 26, 2008	Delta Optimist
November 28, 2008	South Delta Leader
November 29, 2008	Delta Optimist
November 30, 2008	Surrey/North Delta Leader

March 14, 2009 public information session:

Date	Newspaper
March 14, 2009	South Delta Leader

May 30, 2009 public information session:

Date	Newspaper
May 27, 2009	Delta Optimist
May 29, 2009	South Delta Leader
May 30, 2009	Delta Optimist

June 27, 2009 public information session:

Date	Newspaper
June 24, 2009	Delta Optimist
June 26, 2009	South Delta Leader
June 27, 2009	Delta Optimist

July 12, 2009 public information session:

Date	Newspaper
July 8, 2009	Delta Optimist
July 10, 2009	South Delta Leader
July 11, 2009	Delta Optimist

November 27, 2009 public information session:

Date	Newspaper
November 18, 2009	Surrey/North Delta Leader
November 20, 2009	South Delta Leader
November 25, 2009	Surrey/North Delta Leader
November 27, 2009	South Delta Leader
November 28, 2009	The Delta Optimist

November 29, 2009 public information session:

Date	Newspaper
November 18, 2009	Surrey/North Delta Leader
November 20, 2009	South Delta Leader
November 25, 2009	Surrey/North Delta Leader
November 27, 2009	South Delta Leader
November 28, 2009	The Delta Optimist

June 5, 12, and 13, 2010 public information sessions and June 26, 2010 open house:

Date	Newspaper
May 28, 2010	South Delta Leader
June 4, 2010	South Delta Leader
June 4, 2010	Surrey/North Delta Leader
June 5, 2010	South Delta Leader
June 9, 2010	Delta Optimist
June 11, 2010	Surrey/North Delta Leader
June 11, 2010	South Delta Leader
June 12, 2010	Delta Optimist
June 30, 2010	Delta Optimist

2.3 Newsletters

A Deltaport Project Update newsletter was developed to provide updates to the public regarding DP3 activities. The newsletters were delivered to all residential and business addresses via Canada Post mail-drop, circulated to the Project database via e-mail and posted on the PMV website.

Deltaport Third Berth Project Update	February 2007
	November 2007
	May 2008
	November 2008
	May/June 2009
	November 2009
	June 2010
	December 2010

2.4 Project/Construction Updates and Advisories

Forty-one Project/construction updates and advisories were issued by PMV from 2007 to 2010, which provided timely Project information. These advisories/updates were distributed to over 580 individuals on the Project database via e-mail and posted on the PMV website.

2.5 Library Resource Files

Key project information was made available in hard copy in resource files at the following local libraries.

- Ladner Pioneer Library
- George Mackie Library
- South Delta Library
- Cloverdale Library
- Strawberry Hill Library
- City of Langley Library

2.6 Issue Tracking and Response Tables

Issue tracking and response documents were developed by PMV, as laid out in the Owner's Table of Commitments and Assurances. The tracking documents include the issues raised from 2007-2010 by the public in correspondence to PMV and the DCLC and at the Project open house and public information sessions. PMV provided responses to the identified issues on an ongoing basis.

The tracking documents were updated by PMV prior to each DCLC meeting with new issues and PMV responses were added as they were received. The documents were circulated to DCLC members and posted on the Project website.

3.0 Issue Summary

Issues appearing in the Issue Tracking and Response Tables include concerns relating to the environment, noise, lighting, air quality, trucking, rail, the Adaptive Management Strategy (AMS), consultation and communications, socio-economics, and other general project and out-of-scope issues.

Environmental issues included:

- Construction, dredging and power line impacts on wildlife and wildlife habitat, including effects on killer whales, dungeness crabs, barn owls, and other marine and bird life

- Environmental management
- Impacts from the construction of concrete caissons
- Impacts from accidents and spills
- Levels of habitat compensation, especially for the East Causeway Compensation Project
- Damage to silt curtains and mooring buoys
- Removal of preload material

Noise issues included:

- Dredging noise
- General construction noise, especially at night

Lighting issues included:

- Compliance with lighting standards
- Lighting studies undertaken
- Impacts from lighting operations and construction
- Lighting improvements
- Light emanating from the East Causeway Compensation Project
- Strobe light use and impacts

Air quality issues included:

- Emissions from tankers, truck traffic, and construction machinery
- The status and placement of the air quality monitoring station

Trucking issues included:

- General truck traffic impacts
- Safety of truck operations
- Increases in truck traffic
- Adequacy of traffic mitigation measures
- Highway 10 and 17 traffic mitigation measures
- Truck driver behaviour

Rail issues included:

- Road/rail interfaces
- Frequency and length of trains
- Rail's effect on commuter traffic
- Mitigating rail's commuter traffic impacts, (e.g., through overpasses or reliance on trucks)

Issues involving the Adaptive Management Strategy (AMS) included:

- Study area of the AMS
- Independent review of the AMS
- AMS mitigation measures implemented
- Work of the Scientific Advisory Committee (SAC)

Consultation and Communications issues included:

- Support for DCLC
- Longer lead times for construction notification and provision of documents
- Access to Project information
- Transportation to DP3 open house
- Support for involvement of First Nations in Project processes

Socio-economic issues included:

- Impacts to agriculture and farmland
- Mitigating impacts on the lifestyles of residents
- Water access

General project issues and questions included:

- Rationale for the Deltaport Third Berth expansion.
- Impact on existing operations at Roberts Bank
- Emergency preparedness

4.0 Conclusion

Consultation and communications activities for the Deltaport Third Berth Project have been completed as per the Deltaport Third Berth Project: Community Liaison Plan - Construction and First Year Operation Phase.

PMV has fulfilled its community liaison obligations as per the EAO Table of Commitments and Assurances.