FRASER SURREY DOCKS
Pacific Rim Stevedoring

DIRECT TRANSFER COAL FACILITY

Excavation and Dewatering MANAGEMENT PLAN - Final

SUBMITTED June 1st, 2014

Table of Contents

1.0 OBJECTIVE AND BACKGROUND

This document outlines the excavation procedure and dewatering plan for the Direct to Barge Coal Facility dumper pit as per drawings 13024-SK-000 through 13024-SK-007 (Appendix A). The pit will be operated with bottom dump coal cars utilizing striker plates and on rail car compressed air to open and close the car doors. The preliminary pit design will accommodate a hopper with an approximate storage volume of 125 tonnes.

2.0 EXCAVATION AREAS & STAGING

The excavations for the dumper pit are expected to take place in the following chronological order as per the areas listed below (ref drawing 13024-SK-009 P1 in Appendix A):

- Area 1: Hopper Area
- Area 2: Transfer Area
- Area 3: Outfeed Conveyor Tunnel (below ground water level)
- Area 4: Outfeed Conveyor Tunnel (above ground water level)

The following areas are described in further details as follows below:

2.1 Hopper Area

a. This area will accommodate the hopper.
b. The area is estimated to have an excavation depth of approx. 8m below grade, width of approx. 9m, and a length of approx. 35m.

2.2 Transfer Area

a. This area will accommodate the transfer between the feeder conveyor and the outfeed conveyor.
b. This area will be deeper than the hopper area to accommodate the height required at the conveyor transfer.
c. The area is estimated to have an excavation depth of approx. 12m below grade, width of approx. 12m, and a length of approx. 12m.

2.3 Outfeed Conveyor Tunnel (below ground water level)

a. This area will accommodate the Outfeed Conveyor tunnel from the transfer area to ground water level.
b. The area is estimated to have an excavation depth ranging from 12m below grade to ground water level, width of approx. 8m, and a length of approx. 30m (depending on current water depth below grade).

2.4 Outfeed Conveyor Tunnel (above ground water level)

a. This area will accommodate the outfeed conveyor tunnel to grade.
b. The area is estimated to have an excavation depth ranging from ground water level to at grade, width of approx. 8m, and a length of approx. 10m (depending on current water depth below grade).

3.0 EXCAVATION AND DEWATERING PROCEDURES

3.1 AREAS 1 THROUGH 3

The primary methodology of excavation for areas 1 through 3 will be similar as was successfully conducted in the construction of the nearby dry bulk agricultural handling pit in 2011 which had an excavation depth of approximately 9.0m. The following methodology is intended to be implemented:

1. Sheet piles will be driven about the perimeter of the area to be excavated. 50' AZ19-700 sheets are expected to be utilized for area 1. 60' AZ26-700 sheet piles are expected to be utilized for areas 2 and 3.
2. Walers and struts will be installed at grade of the sheet pile wall to provide structural stability.
3. Mid-depth walers and struts will likely be required in deeper sections of the excavation. The required number and size of walers and struts will be determined during detailed design.
4. Once the sheet pile walls have been driven, excavation of the area will take place. The depth of the excavation will allow for the installation of a gravel base. Excavation will be conducted for the most part by a long reach excavator. The excavation of the deeper sections will be finished with a crane and clam.
5. An approximate 1.2m depth of tremie concrete will placed on the gravel material. A specialized scraping device will be used to clean the sheet piles to ensure a tight pond between the tremie concrete and sheet piles. This was successful used when constructing the agri pit. (For clarity, a tremie pour entails pouring concrete in the water while the water resides in the confines of the sheetpiling. The concrete will cure underwater, and once cured, the water can then be safely pumped out leaving a semi-dry pit with a concrete floor and sheetpile walls.)
6. Once the tremie concrete has cured, dewatering of the pit will occur. FSD does not anticipate well point dewatering for the excavation program, given the proposed 1.2 m thick concrete plug to control pit infiltration. Based on FSD's experience with the Agri-pit, pumps will be required in the four corners of the excavation to collect groundwater, which will subsequently be discharged to ground, onto sandy soils, ≥10 m away from the excavation. As part of the dewatering plan, a portion of the excavated surface designated for new rail installation will be left as exposed sandy soil (ref drawing EB3785-SK-34 Appendix A) for this purpose. The process will be monitored to ensure the infiltration capacity is not overwhelmed.
   The dissolved metals data collected by EXP in April 20141 do not indicate elevated metals concentrations relative to Schedule 6 – Generic Numerical Water Standards (Freshwater and Marine / Estuarine Aquatic

[1] Collected at MW14-02

Life2,3). Naphthalene was detected in two of four samples (0.12 ug/L and 0.1 ug/L); well below the CSR standard of 10 ug/L and the Canadian Council of the Ministers of Environment (CCME) surface water quality guidelines of 1 .1 ug/L (freshwater) and 1.4 ug/L (marine waters). Toluene and xylenes were detected in all four groundwater samples, with toluene ranging from 0.5 ug/L to 1.9 ug/L and xylenes from 0.46 ug/L to 1.4 ug/L. Toluene concentrations were all below the 390 ug/L CSR standard and the CCME surface water guidelines of 2 ug/L (freshwater) and 215 ug/L (marine waters). Xylenes were below the 300 ug/L CSR standard4. There are no CCME guidelines for xylenes. Phenol was detected in one sample at 0.71 ug/L, compared with the CSR standard of 10 ug/L for total non-chlorinated phenols. Pentachlorophenol was detected in three of four samples at concentrations ranging from 0.31 ug/L to 1.2 ug/L. The CSR Aquatic Life standard ranges from 1 to 27.5 ug/L (based on pH, temperature and isomer) and the CCME surface water quality guideline is 0.5 ug/L. Finally, chloroform was detected in three of four samples at concentrations ranging from 1.3 ug/L to 1.9 ug/L. These concentrations were below the CSR standard of 20 ug/L, and below or slightly above the CCME freshwater guideline of 1.8 ug/L.

The data compiled to date indicate selected organics in groundwater onsite. Prior to dewatering; soils in target discharge areas will be sampled to ensure they are free of contamination that might be carried through the soil profile by ongoing discharge from the pit. FSD will be prepared to store and treat excavation discharge waters (emphasizing organics removal) during construction and prior to discharge if it is felt to be required. Analytical water quality data will be collected at least twice weekly and processed on a RUSH turn around to confirm the absence of contamination in discharge. The analytical program will focus on dissolved metals, polycyclic aromatic hydrocarbons (PAH), chlorinated and non-chlorinated phenols and volatile organic compounds (VOC). In situ water quality data will be collected daily (e.g. pH and conductivity) and concurrently with analytical samples. The daily data will be used to identify potential changes in discharge water quality overtime. The proposed discharge strategy (and treatment regime) may be adjusted if the water quality data suggest changing conditions. All In situ and analytical data will be summarized in a combination of monitoring and post construction reports.

7. Once the excavated area is dewatered, concrete formwork can be installed. The excavated area will be large enough to allow approximately 1m between the sheetpile wall and concrete wall formwork for access during construction. This access will be lesser where the walers and struts are located. The struts will be cast into the concrete and cut out at a later date.
8. Once the concrete is poured, cured, and the forms are removed the sheetpiles can be removed. The sheetpiles will be in direct contact with the cured tremie concrete, but vibration of the sheetpiles will allow for their removal. This was successfully executed with the construction of the agri pit.

---

[2] Footnote 2(d) from Schedule 6- Generic Numerical Water Standards: *"Standards for groundwater samples for heavy metals, metalloids and inorganic ions are for dissolved substance concentrations. In addition, it is recommended that groundwater samples being analyzed for metals, metalloids and inorganic ions should be analyzed for total substance concentrations".*

[3] Aquatic life standards assume minimum 1:10 dilution available; the Fraser River is the closest open water body to the pit

[4] Standard available for Drinking Water only

9. Once the sheetpiles are removed, the volume behind the concrete forms will be carefully backfilled with pea gravel to ensure no groundwater enters into the pit.

3.2 AREA 4

The excavation procedure for area 4 is expected to be simpler than that encountered in areas 1 through 3 since ground water, and clearances to adjacent existing structures will not be of concern. It is anticipated that these areas will not require sheetpiling, a tremie plug, or dewatering. It is expected that these areas will be excavated utilizing an excavator with side slopes as per recommendations by geotech. Backfill will also consist of pea gravel.

4.0 FUTURE CONSIDERATIONS

The preliminary pit dimensions as presented at this stage are conservative. Once detailed design of the pit begins, the mechanical equipment layout will determine the exact sizes of the pit. In the detailed design phase several details of the pit will be optimized. These optimizations include:

- Minimization of pit excavation volumes
- Minimization of pit depths
- Minimization of concrete volumes
- Optimizing pit geometry for ease of constructability
- Optimization of pit location

5.0 APPENDIX A

FRASER SURREY DOCKS DTB
PROJECT Redesign
PROCESS FLOW
March 2014

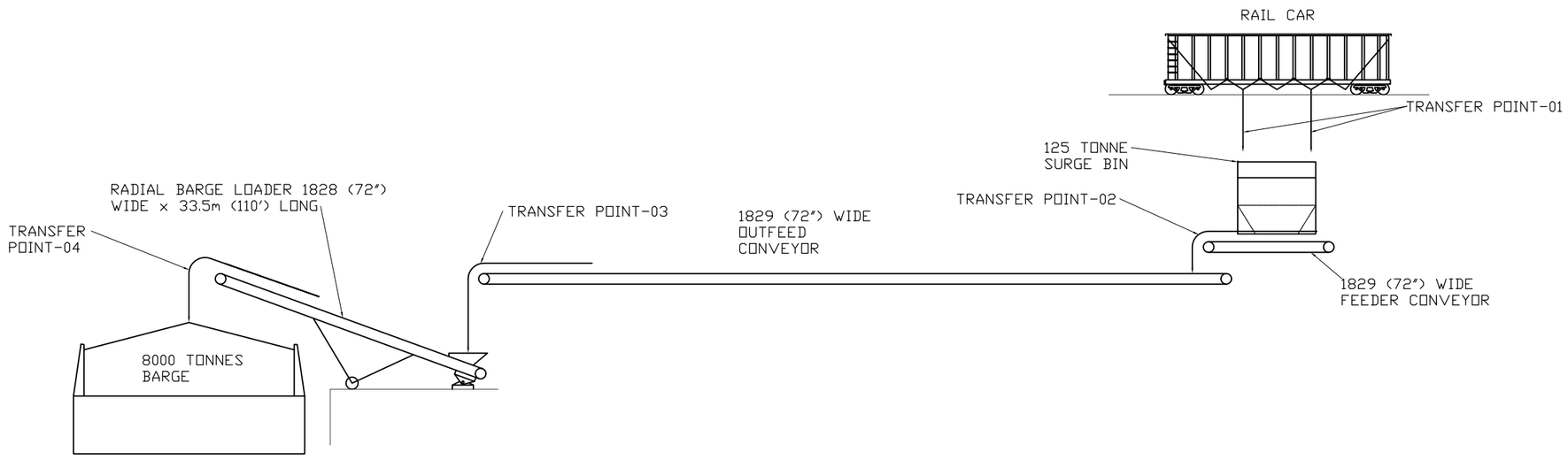

REFERENCE DRAWINGS / DESIGN STANDARDS	
NUMBER	DESCRIPTION

No.	Revision	By	D/M/Y

CWA
www.cwaengineers.com
Suite 380-2925 Virtual Way
Vancouver, B.C. Canada
V5M 4X5
Phone: (604) 637-2275
Fax: (604) 637-2276

Project Number: 13024

	Name	Day	Month	Year
Drawn By	J FRANKE	28	02	14
Design By	CAP	28	02	14
Dwg Check By				
Design Check By				
Approved By				

Scale: NTS | Acad File: 13024-SK-000

FRASER SURREY DOCKS LP
PACIFIC RIM STEVEDORING
SURREY B.C.

Project:
FSD DTB COAL FACILITY

COAL TRANSLOAD FACILITY
REDESIGN
PROCESS FLOW DIAGRAM

Drawing No. 13024-SK-000 | Rev. P1

Issue	D/M/Y	By	Issued For:	Rev.
A	04/03/14	CAP	PERMIT APPLICATION	P1

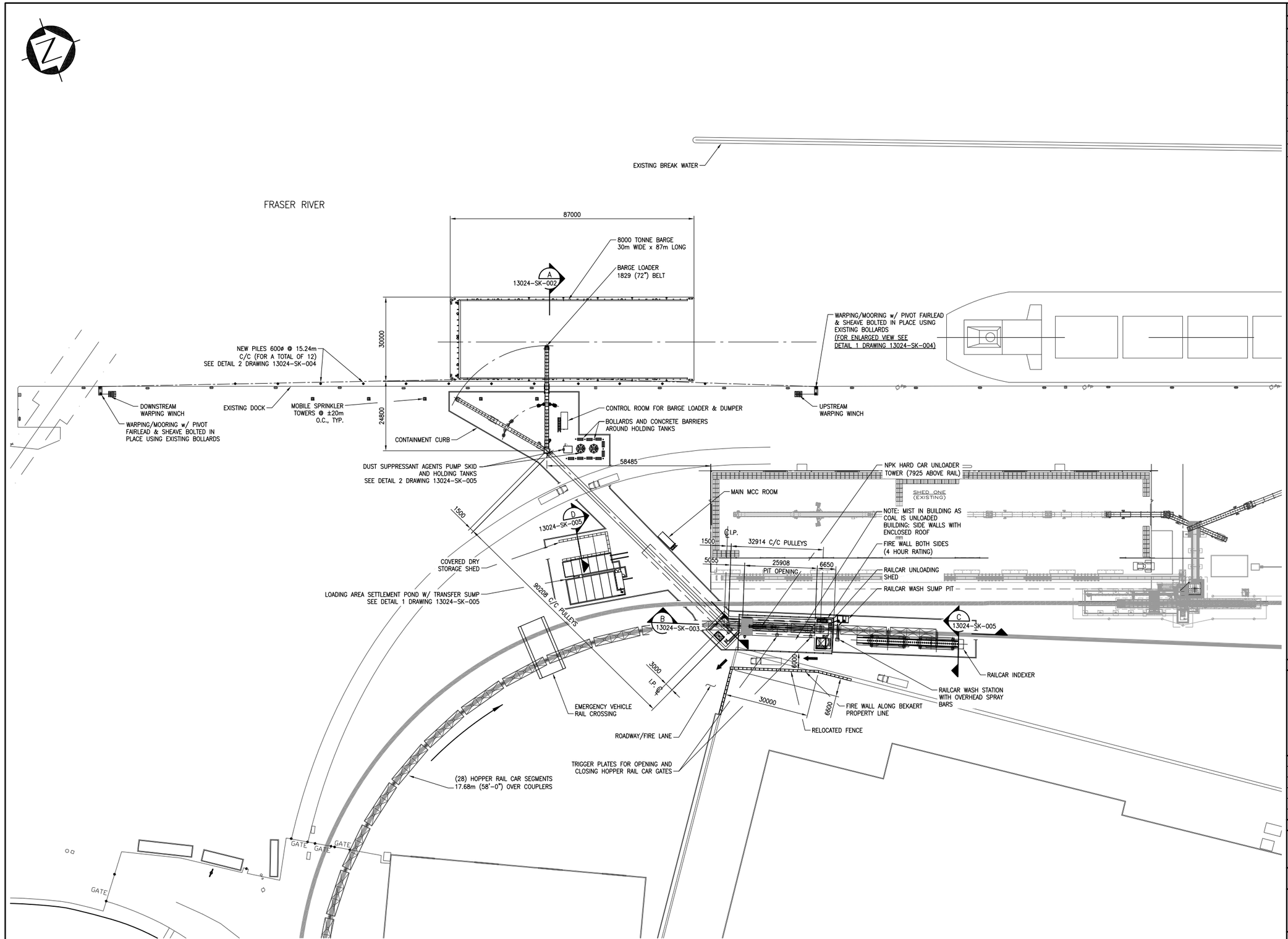

REFERENCE DRAWINGS / DESIGN STANDARDS	
NUMBER	DESCRIPTION

No.	Revision	By	D/M/Y

CWA
www.cwaengineers.com
Suite 380-2925 Virtual Way
Vancouver, B.C. Canada
V5M 4X5
Phone: (604) 637-2275
Fax: (604) 637-2276

Project Number: 13024

	Name	Day	Month	Year
Drawn By	JRM	21	01	14
Design By	CAP	21	01	14
Dwg Check By				
Design Check By				
Approved By				

Scale: 1:600 | Acad File: 13024-SK-001

FRASER SURREY DOCKS LP
PACIFIC RIM STEVEDORING
SURREY B.C.

Project:
FSD DTB COAL FACILITY

COAL TRANSLOAD FACILITY REDESIGN GENERAL ARRANGEMENT PLAN

Drawing No. **13024-SK-001** Rev. **P2**

Issue	D/M/Y	By	Issued For:	Rev.
B	04/04/14	CAP	PERMIT APPLICATION	P2
A	04/03/14	CAP	PERMIT APPLICATION	P1

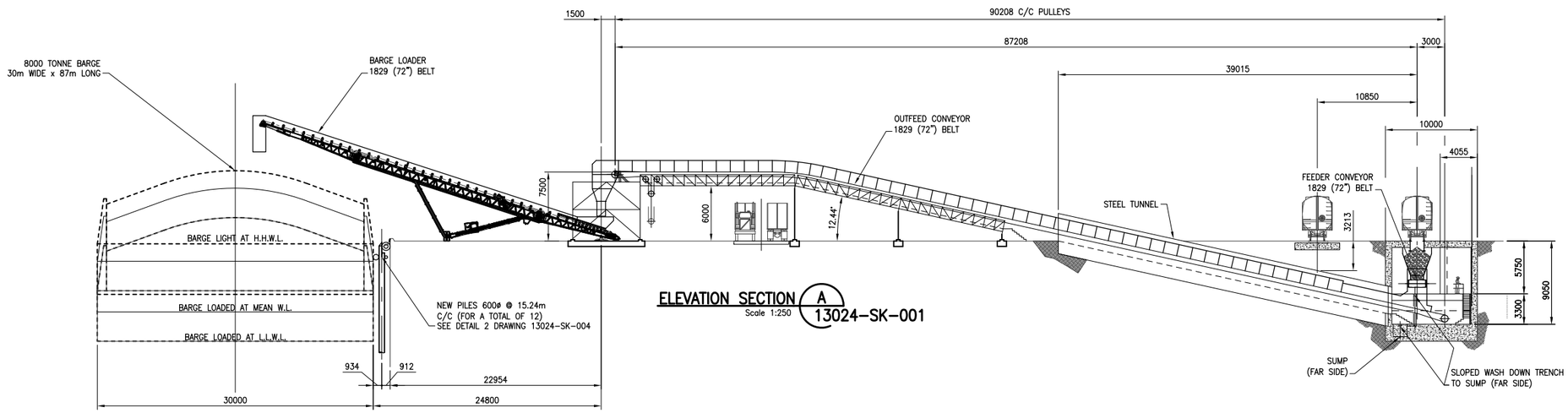

ELEVATION SECTION A 13024-SK-001
Scale 1:250

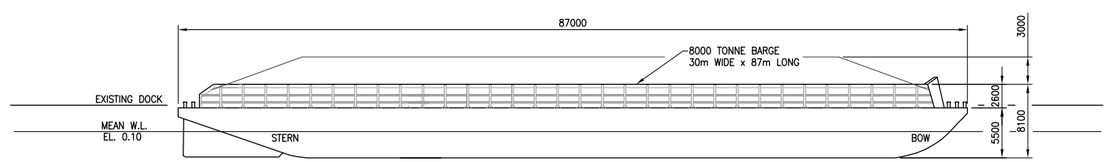

ELEVATION FULLY LOADED BARGE
Scale 1:300

REFERENCE DRAWINGS / DESIGN STANDARDS	
NUMBER	DESCRIPTION

No.	Revision	By	D/M/Y

CWA
www.cwaengineers.com
Suite 380-2925 Virtual Way
Vancouver, B.C. Canada
V5M 4X5
Phone: (604) 637-2275
Fax: (604) 637-2276

Project Number: 13024

	Name	Day	Month	Year
Drawn By	JRM	21	01	14
Design By	CAP	21	01	14
Dwg Check By				
Design Check By				
Approved By				

Scale: AS NOTED | Acad File: 13024-SK-001

FRASER SURREY DOCKS LP
PACIFIC RIM STEVEDORING
SURREY B.C.

Project:
FSD DTB COAL FACILITY

COAL TRANSLOAD FACILITY REDESIGN
GENERAL ARRANGEMENT ELEVATIONS

Drawing No. 13024-SK-002 | Rev. P1

Issue	D/M/Y	By	Issued For:	Rev.
A	04/03/14	CAP	PERMIT APPLICATION	P1

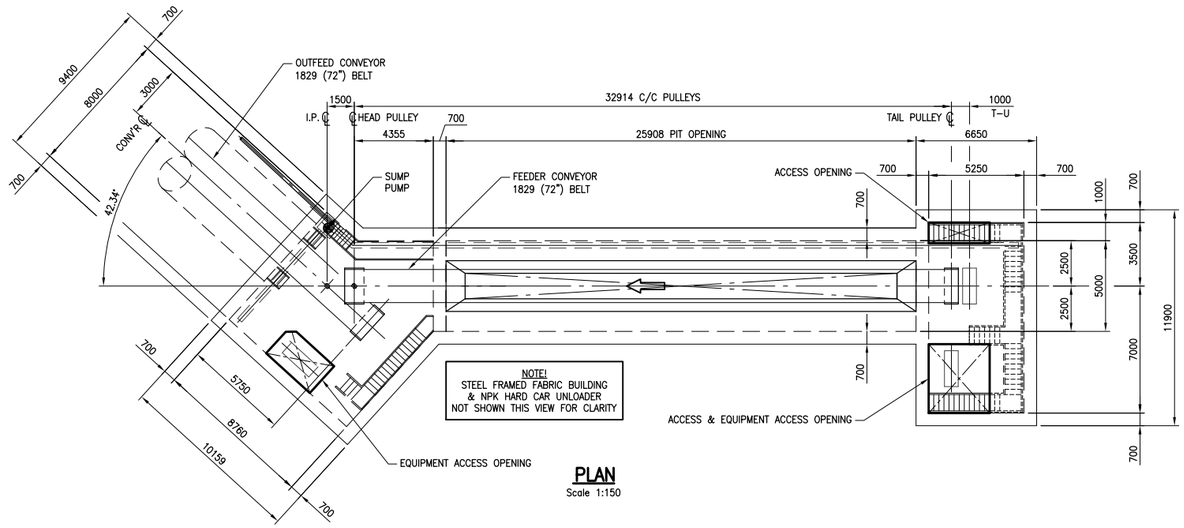

PLAN
Scale 1:150

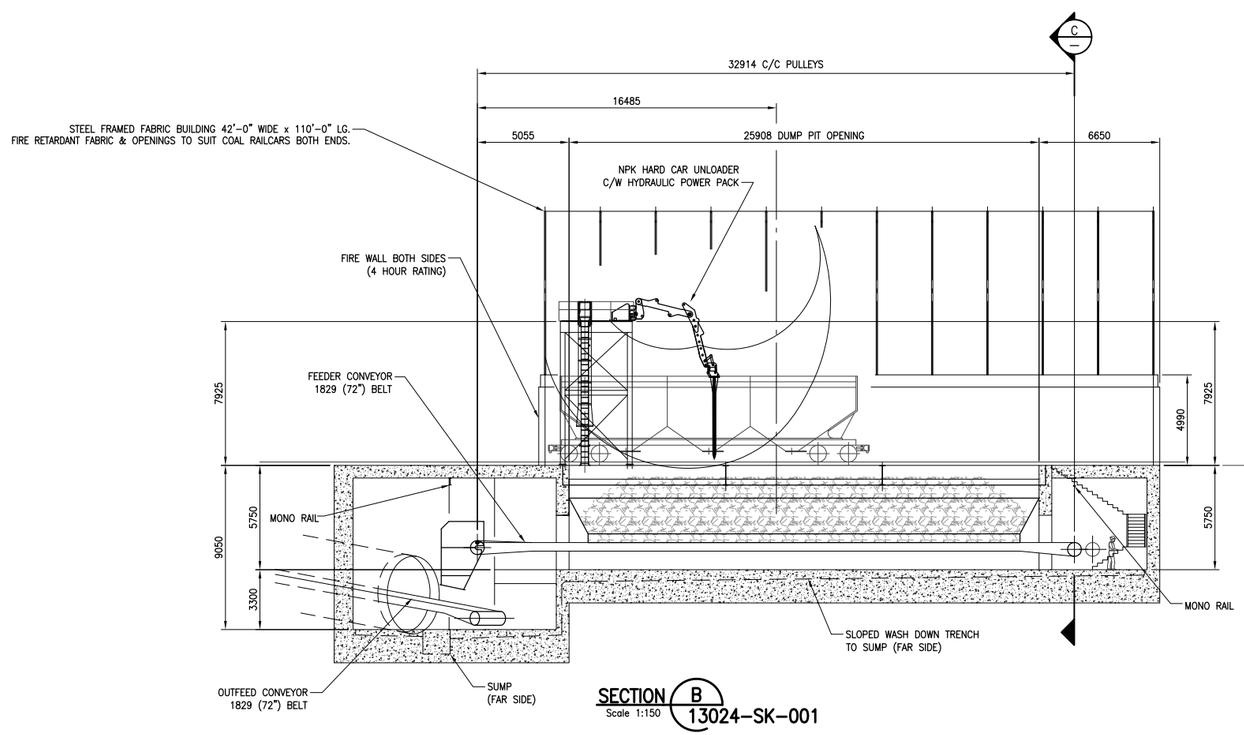

SECTION B
Scale 1:150
13024-SK-001

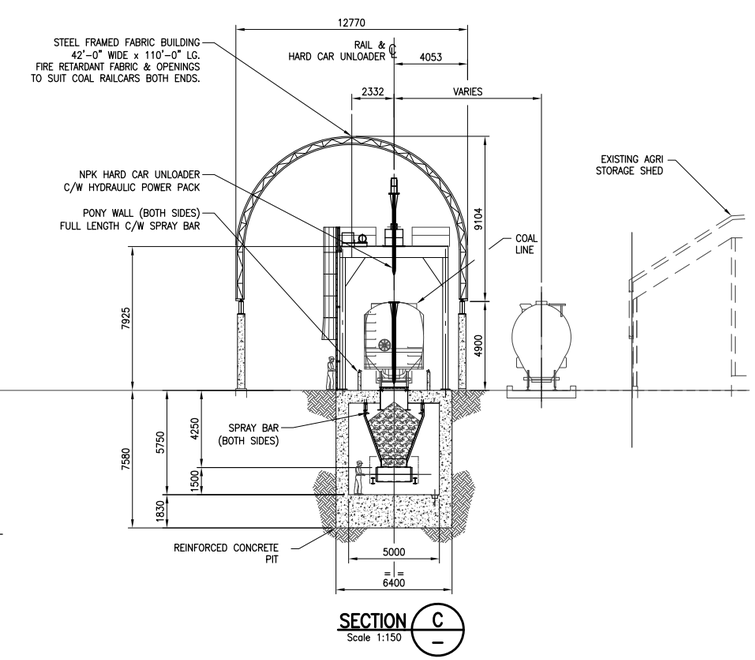

SECTION C
Scale 1:150

REFERENCE DRAWINGS / DESIGN STANDARDS

NUMBER	DESCRIPTION

No.	Revision	By	D/M/Y

CWA
www.cwaengineers.com
Suite 380-2925 Virtual Way
Vancouver, B.C. Canada
V5M 4X5
Phone: (604) 637-2275
Fax: (604) 637-2276

Project Number: 13024

	Name	Day	Month	Year
Drawn By	JRM	21	01	14
Design By	CAP	21	01	14
Dwg Check By				
Design Check By				
Approved By				

Scale: AS NOTED — Acad File: 13024-SK-001

FRASER SURREY DOCKS LP
PACIFIC RIM STEVEDORING
SURREY B.C.

Project:
FSD DTB COAL FACILITY

COAL TRANSLOAD FACILITY REDESIGN
GENERAL ARRANGEMENT RAILCAR DUMPER

Drawing No. 13024-SK-003 — Rev. P1

Issue	D/M/Y	By	Issued For:	Rev.
A	04/03/14	CAP	PERMIT APPLICATION	P1

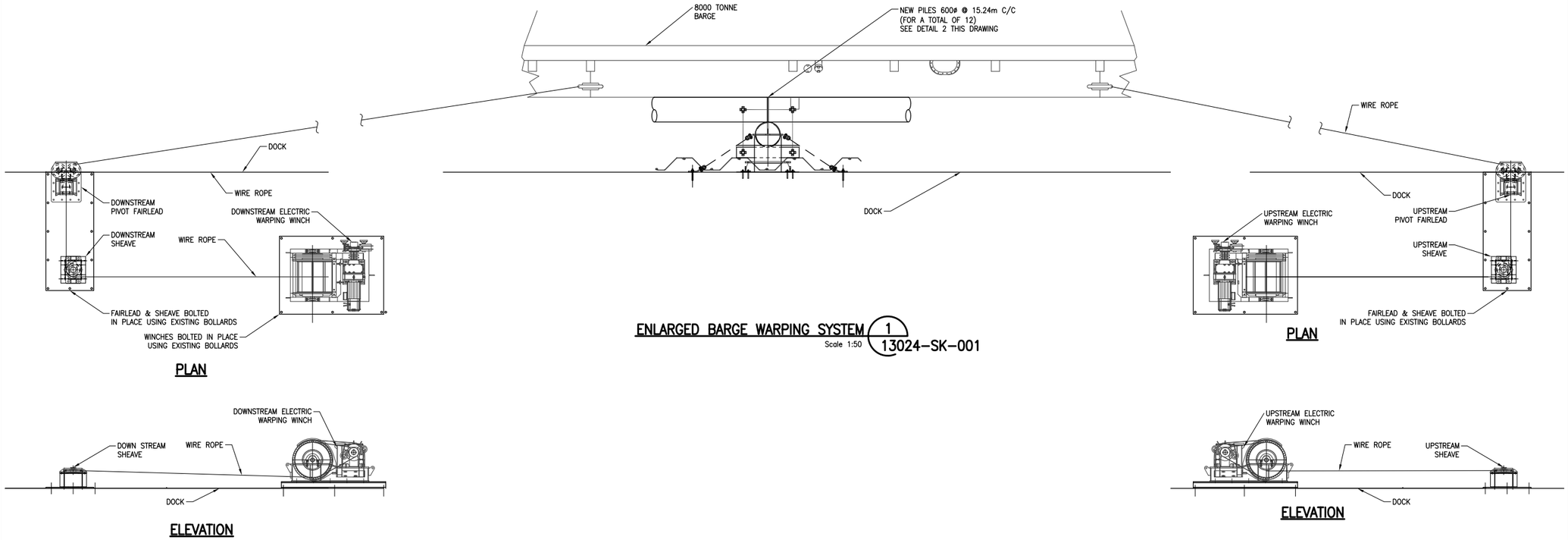

ENLARGED BARGE WARPING SYSTEM (1 / 13024-SK-001)
Scale 1:50

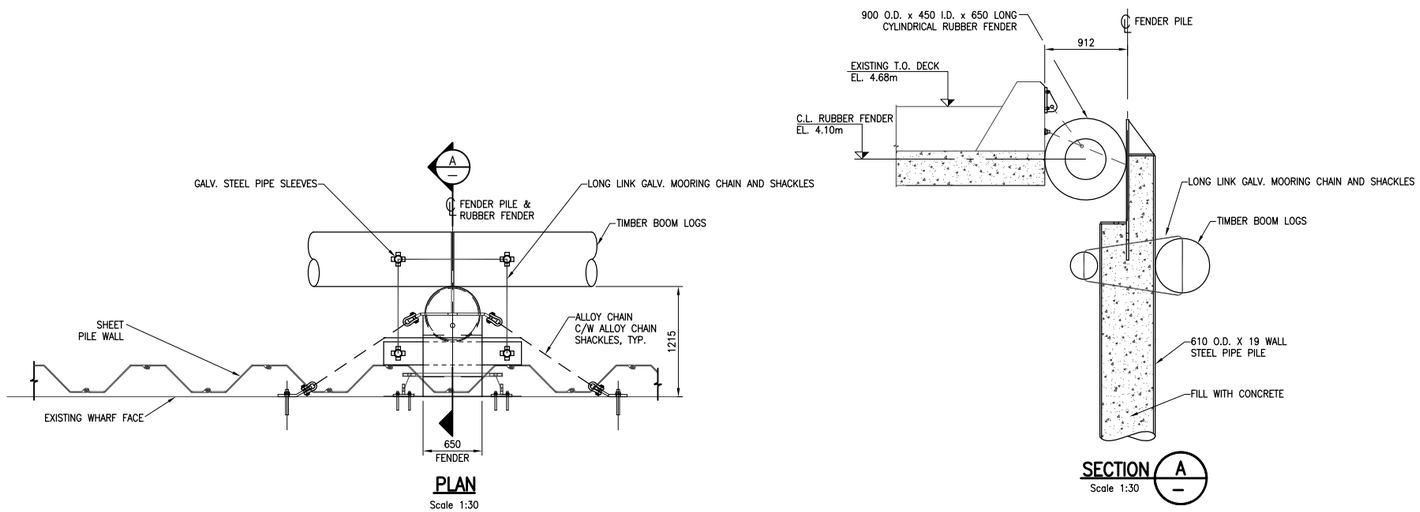

TYP. PILE DETAIL (2 / 13024-SK-001) TYP. 12 LOCATIONS
Scale 1:30

REFERENCE DRAWINGS / DESIGN STANDARDS	
NUMBER	DESCRIPTION

No.	Revision	By	D/M/Y

CWA
www.cwaengineers.com
Suite 380–2925 Virtual Way
Vancouver, B.C. Canada
V5M 4X5
Phone: (604) 637–2275
Fax: (604) 637–2276

Project Number: 13024

	Name	Day	Month	Year
Drawn By	JRM	21	01	14
Design By	CAP	21	01	14
Dwg Check By				
Design Check By				
Approved By				

Scale: AS NOTED | Acad File: 13024–SK–001

FRASER SURREY DOCKS LP
PACIFIC RIM STEVEDORING
SURREY B.C.

Project:
FSD DTB COAL FACILITY

COAL TRANSLOAD FACILITY REDESIGN
BARGE WARPING SYSTEM DETAILS

Issue	D/M/Y	By	Issued For:	Rev.
A	04/03/14	CAP	PERMIT APPLICATION	P1

Drawing No. 13024–SK–004
Rev. P1

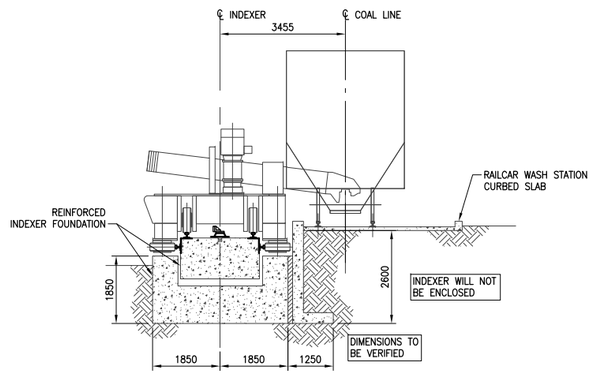

SECTION C 13024-SK-001
Scale 1:75

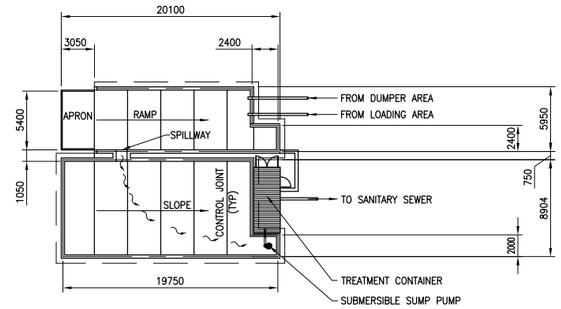

LOADING AREA SETTLEMENT POND DETAIL 1 13024-SK-001
Scale N.T.S.

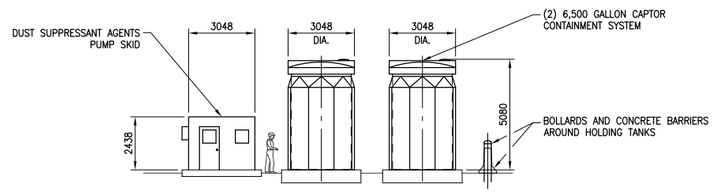

DUST SUPPRESSANT AGENTS PUMP SKID AND HOLDING TANKS DETAIL 2 13024-SK-001
Scale 1:125

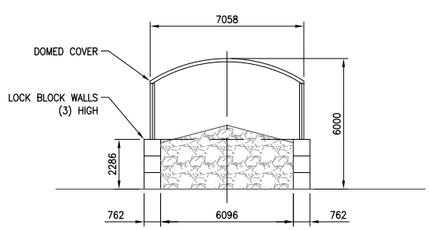

COVERED DRY STORAGE SECTION D 13024-SK-001
Scale 1:125

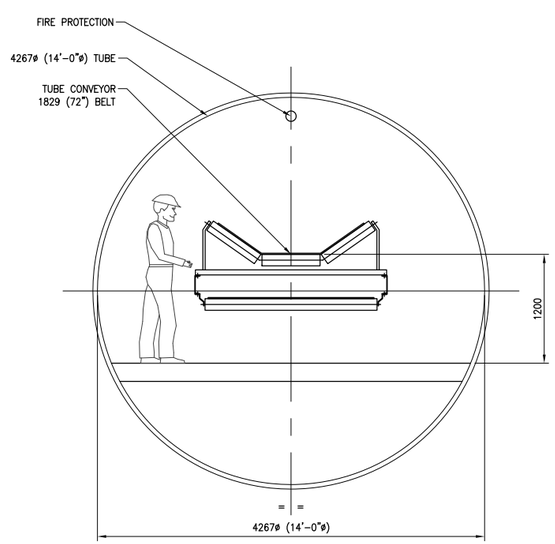

TYP. TUNNEL CONVEYOR SECTION
Scale 1:30

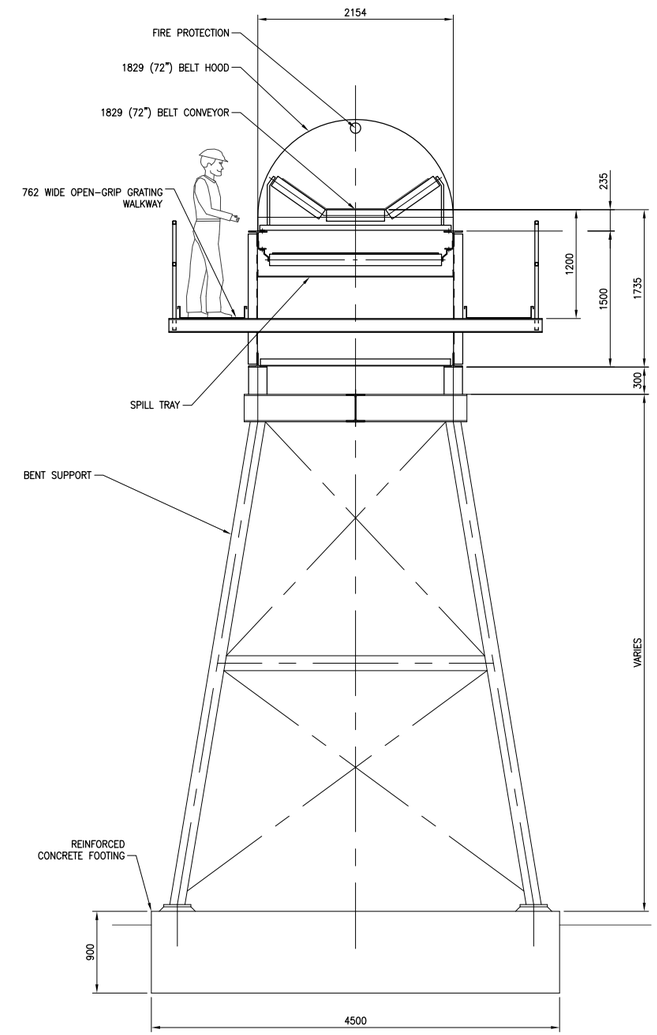

TYP. ELEVATED CONVEYOR SECTION
Scale 1:30

REFERENCE DRAWINGS / DESIGN STANDARDS	
NUMBER	DESCRIPTION

No.	Revision	By	D/M/Y

CWA
www.cwaengineers.com
Suite 380-2925 Virtual Way
Vancouver, B.C. Canada
V5M 4X5
Phone: (604) 637-2275
Fax: (604) 637-2276

Project Number: 13024

	Name	Day	Month	Year
Drawn By	JRM	21	01	14
Design By	CAP	21	01	14
Dwg Check By				
Design Check By				
Approved By				

Scale: AS NOTED | Acad File: 13024-SK-001

FRASER SURREY DOCKS LP
PACIFIC RIM STEVEDORING
SURREY B.C.

Project:
FSD DTB COAL FACILITY

COAL TRANSLOAD FACILITY REDESIGN
SECTIONS & DETAILS

Drawing No. 13024-SK-005
Rev. P1

Issue	D/M/Y	By	Issued For:	Rev.
A	04/03/14	CAP	PERMIT APPLICATION	P1

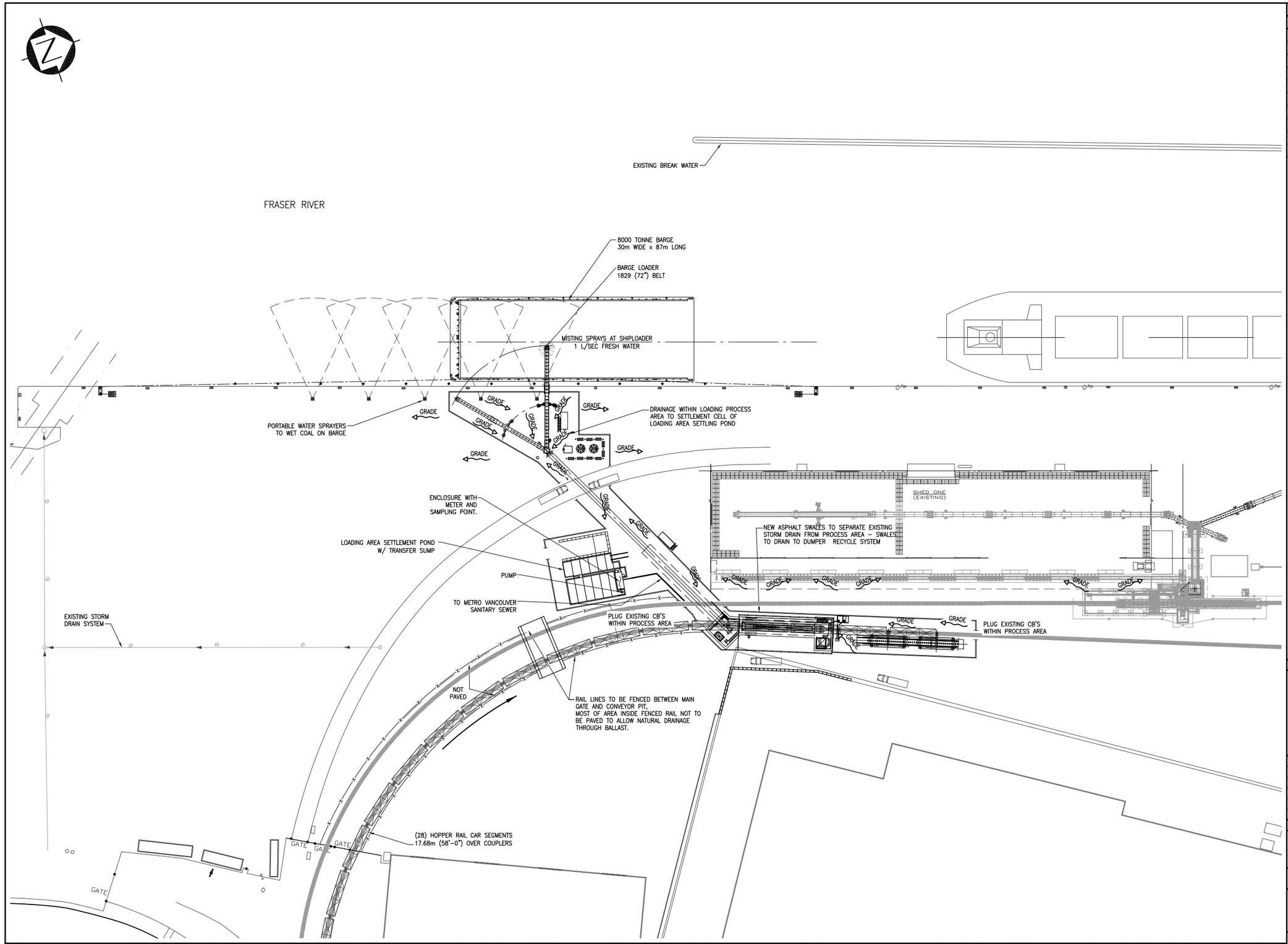

REFERENCE DRAWINGS / DESIGN STANDARDS	
NUMBER	DESCRIPTION

No.	Revision	By	D/M/Y

CWA
www.cwaengineers.com
Suite 380–2925 Virtual Way
Vancouver, B.C. Canada
V5M 4X5
Phone: (604) 637–2275
Fax: (604) 637–2276

Project Number: 13024

	Name	Day	Month	Year
Drawn By	JRM	21	01	14
Design By	CAP	21	01	14
Dwg Check By				
Design Check By				
Approved By				

Scale: AS NOTED | Acad File: 13024–SK–001

FRASER SURREY DOCKS LP
PACIFIC RIM STEVEDORING
SURREY B.C.

Project:
FSD DTB COAL FACILITY

COAL TRANSLOAD FACILITY
REDESIGN
DRAINAGE PLAN

Drawing No. 13024–SK–006 | Rev. P2

Issue	D/M/Y	By	Issued For:	Rev.
B	04/04/14	CAP	PERMIT APPLICATION	P2
A	04/03/14	CAP	PERMIT APPLICATION	P1

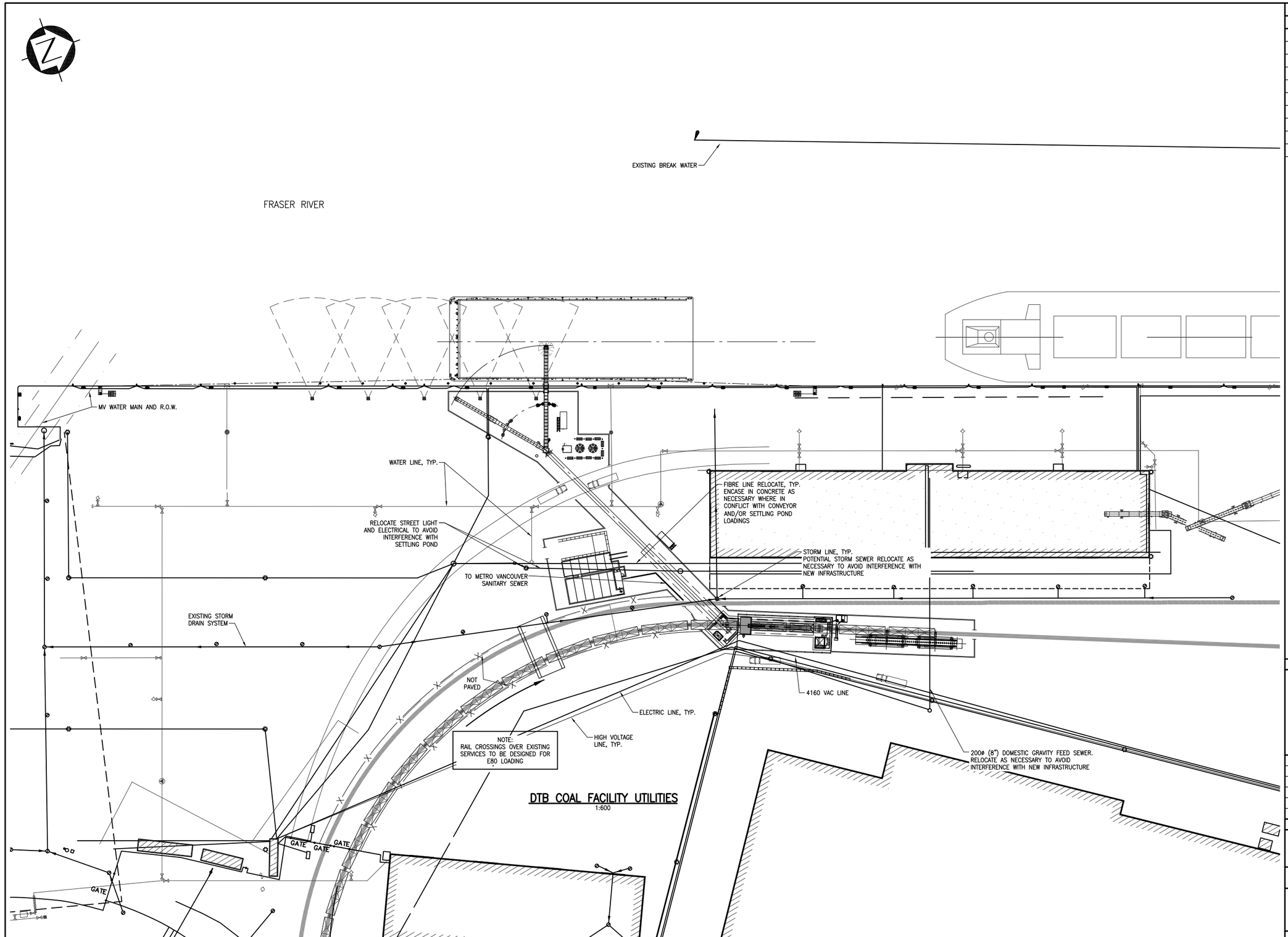

DTB COAL FACILITY UTILITIES
1:600

REFERENCE DRAWINGS / DESIGN STANDARDS	
NUMBER	DESCRIPTION

No.	Revision	By	D/M/Y

CWA
www.cwaengineers.com
Suite 380-2925 Virtual Way
Vancouver, B.C. Canada
V5M 4X5
Phone: (604) 637-2275
Fax: (604) 637-2276

Project Number: 13024

	Name	Day	Month	Year
Drawn By	JRM	03	03	14
Design By	CAP	03	03	14
Dwg Check By				
Design Check By				
Approved By				

Scale: AS NOTED | Acad File: 13024-SK-007

FRASER SURREY DOCKS LP
PACIFIC RIM STEVEDORING
SURREY B.C.

Project:
FSD DTB COAL FACILITY

COAL TRANSLOAD FACILITY REDESIGN UTILITIES PLAN

Drawing No. 13024-SK-007 | Rev. P2

Issue	D/M/Y	By	Issued For:	Rev.
B	04/04/14	CAP	PERMIT APPLICATION	P2
A	04/03/14	CAP	PERMIT APPLICATION	P1

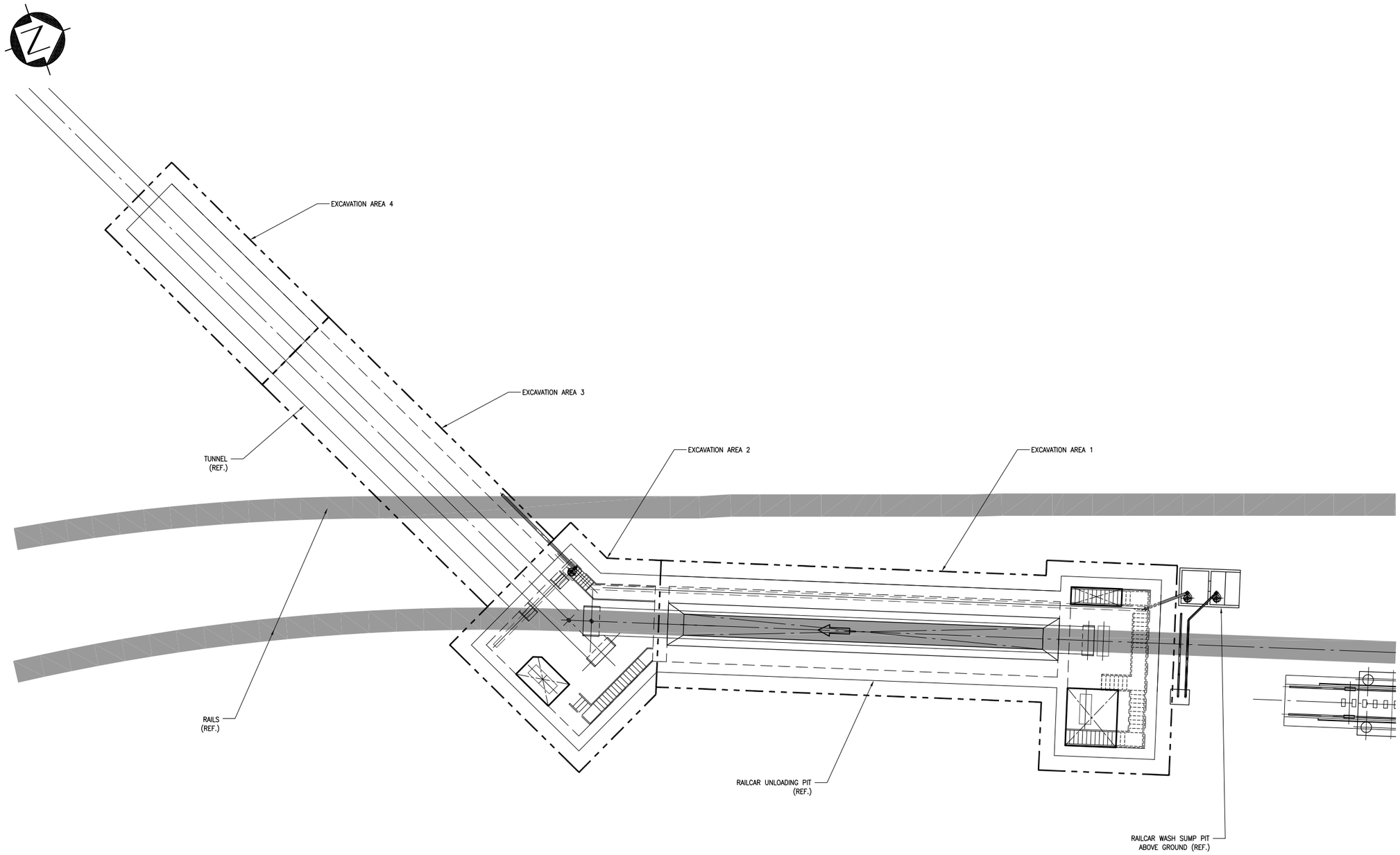

REFERENCE DRAWINGS / DESIGN STANDARDS	
NUMBER	DESCRIPTION

No.	Revision	By	D/M/Y

CWA
www.cwaengineers.com
Suite 380–2925 Virtual Way
Vancouver, B.C. Canada
V5M 4X5
Phone: (604) 637–2275
Fax: (604) 637–2276

Project Number: 13024

	Name	Day	Month	Year
Drawn By	JRM	07	05	14
Design By	CAP	07	05	14
Dwg Check By				
Design Check By				
Approved By				

Scale: AS NOTED | Acad File: 13024–SK–009

FRASER SURREY DOCKS LP
PACIFIC RIM STEVEDORING
SURREY B.C.

Project:
FSD DTB COAL FACILITY

COAL TRANSLOAD FACILITY REDESIGN
PIT EXCAVATION AREAS

Drawing No. 13024–SK–009 | Rev. P1

Issue	D/M/Y	By	Issued For:	Rev.
A	07/05/14	CAP	CLIENT REVIEW	P1

FRASER RIVER

COAL BARGE

SHED ONE

SHED TWO

SHED FOUR

TITAN STEEL

STORAGE

3m

4.42m

2.44m

EXCAVATION FOR RECEIVING PITT

INFILTRATION AREA = 670.90m²

COAL RAIL LOOP (NEW TRACK 44)

EXISTING TRACK 45

AGRI-RAIL LOOP (REALIGNED TRACK 45)

TIE-IN TO EXISTING

STEEL GATE

LUNCH ROOM

ACCOUNTING

BEKAERT CANADA

ALASKA WAY

Gunderson Slough

CITY OF SURREY

CORPORATION OF DELTA

RELOCATED BEKAERT ACCESS

FSD DTB PROJECT PERMIT DRAWINGS
NOT FOR CONSTRUCTION

LEGEND

- PROPOSED RAILWAY TRACK
- PROPOSED RAILWAY SWITCH
- PROPOSED CHAINLINK FENCE
- VEHICLE TRAFFIC FLOW
- RELOCATED BEKAERT ACCESS

1:1000 0 20 60m

Ref.No.	REFERENCE

Delcan
TRANSPORTATION • INFORMATION TECHNOLOGY • WATER
METROTOWER I, SUITE 2300, 4710 KINGSWAY, BURNABY, BRITISH COLUMBIA, CANADA V5H 4M2
TEL: 604-438-5300 FAX: 604-438-5350
www.delcan.com

No.	Date	REVISION	Dr'n	Ch'd
1	2014/04/10	ISSUED FOR ENVIRONMENTAL PERMIT	KS	SH

FRASER SURREY DOCKS LP

DESIGN BY	SH
DRAWN BY	DCB
APPROVED	SH
DATE	2013/03/08
SCALE	AS SHOWN
PMV SITE	

DTB COAL FACILITY – REDESIGN

SIZE D | DWG. EB3785-SK-34 | SHEET | REV.

DATE: 2014/04/10 – 11:42am
PATH: Q:\EB\3785 FSD DTB Coal Facility Engineering Design Services\EB\Dwgs\Report Figures & Sketch Plans\EB3785-SK-34.dwg

TITLE BLOCK: DL-TB.dwg