DIRECT TRANSFER COAL FACILITY

WATER MANAGEMENT PLAN

SUBMITTED August 2014

Table of Contents

1.0 INTRODUCTION

1.1 Objective

To provide a description of the Water Management Systems (WMS) proposed for the Fraser Surrey Docks Direct o Barge (DTB) coal transfer facility. This WMS plan reflects a revised dumper arrangement and recent discussions with Metro Vancouver regarding discharge of coal drainage wastewater to the sanitary sewer. Treated wastewater is proposed for discharge to a Metro Vancouver main line that is connected to Metro Vancouver's Annacis Island Waste Water Treatment Plant (WWTP). The Annacis facility treats 175 billion litres of wastewater annually and provides secondary treatment prior to offsite discharge under Operational Certificate ME-00387[1,2]. A discharge to sanitary sewer requires a permit under the Greater Vancouver Sewerage and Drainage District's Bylaw 299. FSD has been working with Metro Vancouver on obtaining this permit since 2013.

1.2 General Description of Proposed Water Management Systems

The water systems at the proposed Fraser Surrey Docks DTB coal terminal will comprise of three components: municipal water, coal drainage wastewater, and recycled water.

1. **MUNICIPAL WATER** from the City of Surrey municipal water supply will be used to provide clean water for dust suppression:
   a. High volume sprays for barge wet down
   b. Fine misting sprays at coal transfer points and dumper
   c. Equipment and pavement wash downs

2. **COAL DRAINAGE WASTEWATER** will be collected from the process areas and, as much as possible, recycled. In heavy rainfall events there will a surplus of coal drainage wastewater which will have to be stored, treated and discharged from the site. FSD is proposing to discharge the surplus wastewater to the Metro Vancouver sanitary sewer system (identified as Option A). *Note: Previous versions of this Water Management Plan included an Option B and an Option C for waste water discharge. These two latter Options remain as possible contingency plans.*

3. **RECYCLED WATER** is coal drainage wastewater which has undergone some settlement and can be used to flush out the dumper and wash the railcars after dumping.

[1] Metro Vancouver – Annacis Island WWTP web page
http://www.metrovancouver.org/services/wastewater/treatment/TreatmentPlants/Pages/Annacis.aspx

[2] Wastewater. The Greater Vancouver Sewerage & Drainage District Quality Control Annual Report 2012

2.0 WASTEWATER MANAGEMENT

2.1 Wastewater Management Objectives

The primary objective is to design and operate an efficient, highly effective system with negligible impact on the environment. To meet this objective, the following strategies will be employed:

1. Contain and treat all coal drainage wastewater within the process area before discharging it to the Metro Vancouver sanitary sewer system.

2. Ensure all treated wastewater not reused for dust suppression consistently meets Metro Vancouver's Bylaw 299 - Schedule "B"-Restricted Waste criteria for suspended solids, oil/grease and other parameters as necessary before discharge to the sanitary sewer.

3. Minimize the amount of wastewater that needs to be treated and discharged by recycling as much as possible for use in the railcar wash system and dumper flushing.

4. Control the rate at which wastewater is discharged to the sanitary sewer (maximum 5 Litres / second – or 0.005 m^3 / second) and avoid discharging during heavy rainfall events when the sanitary sewer is surcharged by storm water intrusion. This will be accomplished by providing additional, onsite wastewater storage capacity in the form of one 450,000 litre (450 m^3) Reserve Storage Tank

2.2 Wastewater Sources - Process Areas

Process areas may accumulate surface coal due to normal railcar unloading ("dumping") and barge loading activities. Drainage in a process area is collected separately from the overall site drainage system, as it may potentially contain coal particles and is therefore considered to be a wastewater. This wastewater may be produced by washing down equipment and paved areas or, most significantly, by surface runoff during rainfall events. The attached drawing 2113-SK002A (Rev P1) indicates the extent of the process area.

2.3 Treatment and Discharge of Coal Drainage Wastewater

Coal drainage wastewater has the characteristics of a dilute slurry. The *suspended solids* content of the slurry, or the amount of coal in it, varies widely depending upon the source and the flow rate. By way of illustration, a coal slurry with a suspended solids content of 800 ppm is .08% coal and 99.92% water by weight. Excess coal drainage wastewater, i.e. a surplus over usable as recycled water, will need to be treated and discharged from the site. Treatment will emphasize gravity settling to achieve <600 mg/L total suspended solids (TSS) reflective of Table A, Schedule "B" Restricted Wastes of Bylaw 299.

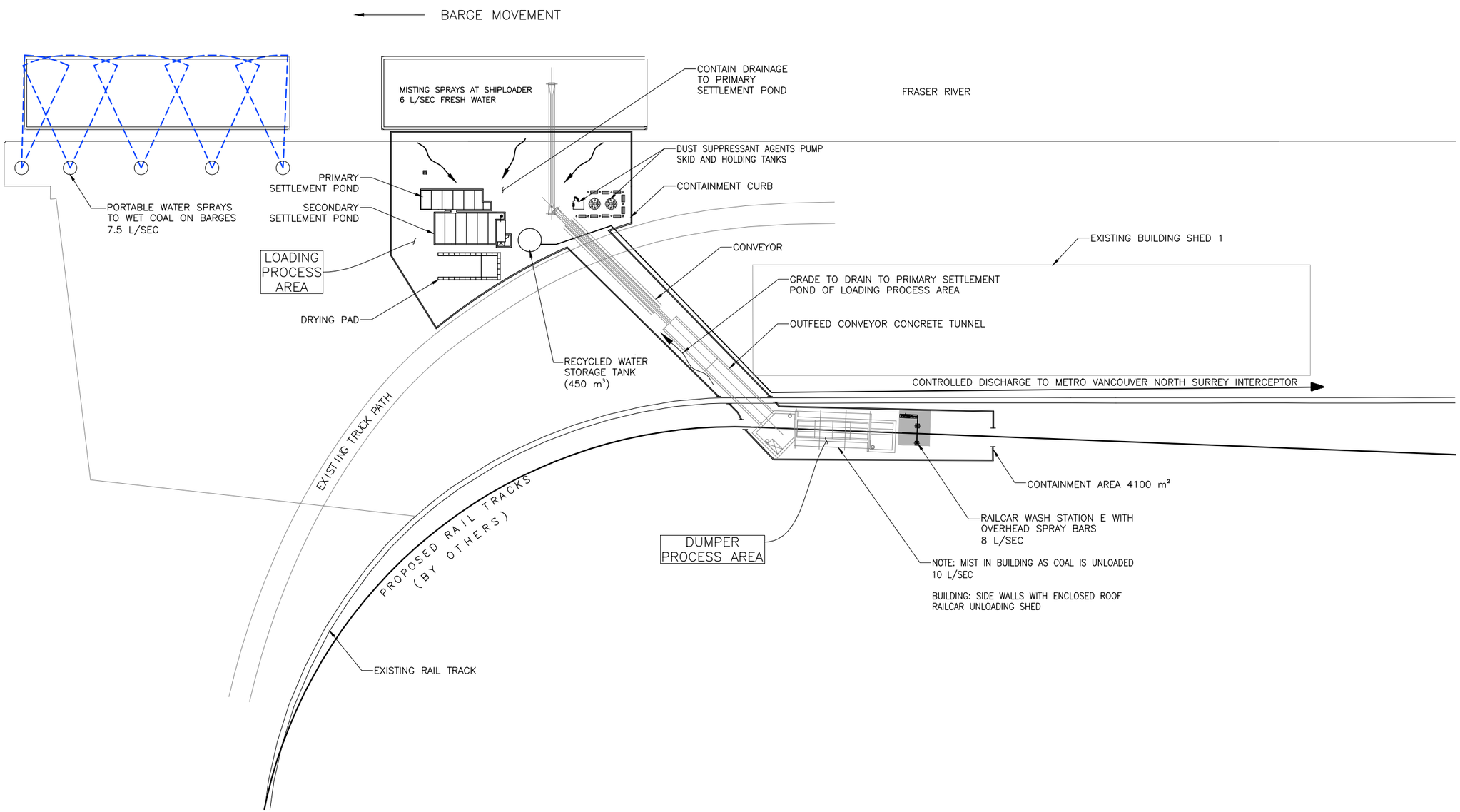

PLAN
N.T.S.

REFERENCE DRAWINGS	
DRAWING NUMBER	REV.
2113-SK002B.dwg	P1

NO.	BY	DATE	DESCRIPTION
P1	BH	2014-06-24	ISSUED FOR REVIEW

REVISION

SEAL:

DATE:

CONSULTANT:

Omni ENGINEERING INC.
CONSULTING ENGINEERS & PROJECT MANAGERS
#206 E. HASTINGS STREET
VANCOUVER, BC V5K 2A9
PH: 604 - 298 - 0508
FAX: 604 - 298 - 0536

CLIENT:
FRASER SURREY DOCKS LP
Pacific Rim Stevedoring Ltd.

PROJECT:
PROPOSED COAL LOADOUT FACILITY
WATER MANAGEMENT SYSTEM

DRAWING TITLE:
WATER MANAGEMENT SYSTEM
GENERAL LAYOUT

ENGINEER:	DS	DATE:	2014-06-24
DESIGN BY:	PC	SCALE:	AS SHOWN
DRAWN BY:	BH	ACAD FILE NO:	
DRAWING NUMBER:	2113-SK002A	REVISION NUMBER:	P1

Filename: Z:\Omni Projects\2113 Fraser Surrey Docks - Dust Suppression\Water Management Plan July 2014\2113 Water Management Schematics 2014 (P2-HST).dwg - G.A. - DISCHARGE TO STORM SEWER
Last Saved: Jul. 21/14 10:10am Plotted: Jul. 21/14

2.4 Discharge to Metro Vancouver Sanitary Sewage System

Surplus coal drainage wastewater is proposed for discharge to the Metro Vancouver Sanitary Sewer under a Waste Discharge Permit in accordance with the Greater Vancouver Sewerage & Drainage District Sewer Use Bylaw No. 299. The bylaw sets limitations on the characteristics of the wastewater to be discharged including but not limited to a maximum TSS of 600 mg/L.

The Waste Discharge Permit will stipulate a maximum rate (5 L/s) at which wastewater can be discharged to the sanitary sewer during non-surcharged conditions. As indicated in Section 2.1 above, a 450 m^3 Reserve Storage Tank will be installed to retain coal wastewater onsite during heavy rainfall events and conform to the maximum discharge rate of 5 L/s.

At the connection point to the Metro Vancouver Sanitary Sewer, there will be a standpipe with a level sensor. When the level sensor indicates the Metro Vancouver Sanitary Sewer is surcharged, there will be no discharge from the site and all coal drainage wastewater will be retained in the Reserve Storage Tank and onsite treatment ponds. Annual fees are associated with the permit based upon volumes discharged. There are also stringent sampling and recording requirements. Sampling and metering of the settled wastewater will be conducted downstream of the submersible pump in the Settlement Pond in a small enclosure at a location to be determined on consultation with Metro Vancouver. Based on discussions to date, Metro Vancouver indicate that the permit will stipulate sampling and analyses of the following parameters in the treated discharge: pH, TSS, BOD, chloride, sulphate, Oil & Grease (total and hydrocarbon based), polycyclic aromatic hydrocarbons (PAH), benzene, ethylbenzene, toluene and xylenes (BETX) and total metals. FSD further anticipates Metro Vancouver will require quarterly reporting of laboratory and *in situ* water quality data collected in support of the discharge program

2.5 Settling Pond

TSS removal to meet the ≤600 mg/L limit is proposed by simple gravity settling in a two cell settling pond to be located approximately as shown on the attached drawing 2113-SK002A (Rev P1). The majority of the coal solids will settle out in the primary cell, which will be sized to store these accumulated solids and be wide enough to allow access for a front end loader. The secondary cell will accumulate fine coal solids. The second cell will be cleaned out by pumping accumulated solids back into the primary cell for removal by a front end loader.

Typical Settlement Pond (under construction)

2.6 Reducing Suspended Solids Content by Gravity Settling

The rate of settlement of suspended particles in water is a typical design calculation based on several different parameters. Namely, the vertical velocity, i.e. the settling rate of any particle in a liquid, is determined by Stokes Law (see Appendix A) which takes into account:

- particle diameter
- particle specific gravity
- viscosity of the liquid
- specific gravity of the liquid

Coal has low specific gravity (typically SG 1.4) versus mineral aggregates (typically SG 2.7). The particle diameter of a coal sample is illustrated by a particle size distribution curve and available information on the Powder River Basin coal to be loaded out indicates a relatively large percentage of fine (small diameter) particles. The combination of low specific gravity and small particle diameter will result in low settling velocities and the settling ponds will be sized accordingly.

2.7 Volumes of Discharge Water

Volumes of discharge water generated by dust control and equipment wash downs are relatively minor in comparison to the volume of storm water runoff from the process area during periods of heavy rainfall. For small watersheds such as the Process Area, the Rational Method is commonly used. It is an appropriate and conservative methodology for this application whereby:

Q =CIA
Q = Runoff (e.g. litres or m^3 during a specified time interval)
C = Concentration factor. Paved surfaces with a concentration factor of 0.9 appropriate for use here
I = Rainfall intensity mm/hr for the time interval under consideration (IDF curves for 10 year and 25 year return periods) Surrey Kwantlen Park weather station. The time interval under consideration is 24 hours.
A = area (proposed process area is 4,100 m^2)

The application of the Rational Method results in the following volumes of storm water generated during a 24 hour rainfall event:

- 10 year rain event, 318.6 m^3 (84,200 US gallons)
- 25 year rain event, 360.7 m^3 (95,300 US gallons)

2.8 Size of Reserve Storage Tank

The maximum discharge rate in the Waste Discharge Permit will be 5L/s. The maximum daily discharge is therefore calculated as follows

5 L/sec x 60 seconds/minute x 1440 minutes/say = 432,000L (432 m^3) per day

Note that this discharge rate is more than the 10 year storm water generation (318.6 m^3) and 25 year storm water generation (360.7 m^3) and it would appear that on site storage would not be required. However two further factors are being taken into consideration in the design:

1. Rainfall Pattern: A rainfall event has an average rainfall intensity but the actual rainfall intensity within the rainfall event varies widely, and for short periods of time the intensity can be many times the average. In such cases, a 5L/sec discharge rate will not be adequate to deal with the short term high intensity rainfall. To illustrate this, the following tables indicate the surplus that accumulates during a 10 year and 25 year rainfall events and the volume that would need to be temporarily stored.

Table 1. 10 Year Storm Events for the FSD Area

Fraser Surrey Docks - Kwantlen Park Rain Gauge 10 year storm

Time (min)	mm/hr IDF curve	mm	c	Area (m^2)	Volume runoff m^3	Pump L/sec	Volume discharge m^3	Volume stored m^3
5	60	5.0	0.9	4100	18.4	5	1.5	16.9
10	42	7.1	0.9	4100	26.0	5	3	23.0
15	35	8.7	0.9	4100	31.9	5	4.5	27.4
20	30	10.0	0.9	4100	36.9	5	6	30.9
30	25	12.3	0.9	4100	45.3	5	9	36.3
40	21	14.2	0.9	4100	52.3	5	12	40.3
60	17	17.4	0.9	4100	64.2	5	18	46.2
120	12	24.7	0.9	4100	91.1	5	36	55.1
480	6	49.6	0.9	4100	183.1	5	144	39.1
600	6	55.5	0.9	4100	204.9	5	180	24.9
720	5	60.9	0.9	4100	224.6	5	216	8.6
1440	4	86.3	0.9	4100	318.6	5	432	-113.4

Table 2. 25 Year Storm Events for the FSD Area

Fraser Surrey Dock - Kwantlen Park Rain Gauge 25 year storm

Time (min)	mm/hr IDF curve	mm	c	Area m^2	Volume runoff m^3	Pump (L/sec)	Volume discharge (m^3)	Volume stored (m^3)
5	72	6.0	0.9	4100	22.1	5	1.5	20.6
10	51	8.4	0.9	4100	31.1	5	3	28.1
15	41	10.3	0.9	4100	38.0	5	4.5	33.5
20	36	11.9	0.9	4100	43.8	5	6	37.8
30	29	14.5	0.9	4100	53.5	5	9	44.5
40	25	16.7	0.9	4100	61.6	5	12	49.6
60	20	20.4	0.9	4100	75.3	5	18	57.3
120	14	28.7	0.9	4100	105.9	5	36	69.9
480	7	56.9	0.9	4100	209.8	5	144	65.8
600	6	63.5	0.9	4100	234.2	5	180	54.2
720	6	69.4	0.9	4100	256.3	5	216	40.3
1440	4	97.7	0.9	4100	360.7	5	432	-71.3

Data in Tables 1 and 2 indicate a Reserve Storage Tank greater than 69.9 m^3 could temporarily store the excess storm water runoff for a 10 year or a 25 year rain event, as long as the 5 L/sec discharge rate is in effect.

2. The second factor affecting the size of the Reserve Storage Tank is periodic surcharging in the Metro Vancouver Sanitary Sewer (North Surrey Interceptor). FSD will not be able to discharge to the sanitary sewer when the NS interceptor is surcharged. Data have been obtained for surcharging events since 2008. The North Surrey interceptor surcharges multiple times a year but generally for < 12 hours at a time. However there have been periods when it was surcharged for several consecutive days. Table 3 below lists these periods and the rainfall that fell during the surcharged days.

Table 1. North Surrey Surcharge Events

Year	Consecutive Days with Surcharge	Total Precipitation (mm)	Total Runoff Volume (m^3)	Note
2008	2.00	7.20	26.60	Continuous Rain Event
2009	8.00	84.60	312.20	Continuous Rain Event
2009	3.00	59.20	218.40	-
2009	2.00	33.00	121.80	-
2009	2.00	18.80	69.40	-
2010	2.00	50.60	186.70	-
2011	3.00	54.80	202.20	-
2013	4.00	48.20	177.90	-

These data indicates a Reserve Storage Tank volume of 312.2 m^3 would be adequate to store runoff while the NS interceptor is surcharged for extended periods of time. However, to be conservative the storage tank volume design has been increased to 450 m^3 (approximately 119,000 US gallons) to provide some further contingency.

3.0 RECYCLED WATER

Settled water in the Storage Tank will contain < 600 ppm coal solids. As much as possible water will be recycled on site for the following two main purposes:

1. Washing rail cars after dumping
2. Wash downs for the conveyor spill trays and dumper basin

Drawing 2113-SK002B (Rev P2) below outlays the schematic water management system including the use of recycled water.

During the dry summer months there will be relatively little recycled water available whereas in the rainy winter months there will be an overabundance which will have to discharge to the sanitary sewer. The intent is to utilize water that may be stored in the storage tank during the summer months for recycled water use.

4.0 CITY OF SURREY WATER REQUIREMENTS

4.1 Uses

Water will be drawn from the existing municipal water supply for the following:

1. Spraying on loaded barges for dust suppression.

2. Misting sprays at dumper and transfers. Recycled water cannot be used for this purpose as it would clog the very fine misting nozzles.
3. Site and equipment wash down
4. Make up water to Reserve Storage Tank during dry summer months (for use in railcar wash and dumper flush outs).

4.2 Volumes Required

The following calculations in Table 4 have been discussed with the City of Surrey at a meeting at Surrey City Hall on June 6th 2014.

Table 2. Municipal Water Volume Usage Calculations

Municipal Water use for Dust Suppression	Peak Flow Rate L/sec	Normal max time per day - minutes	Volume per day m3	Comments
Mobile sprinklers	7.5	7.5**	4	5 sprinklers operating sequentially
Misting Spray barge loader	1	180**	11	
Rail car wash station	2	180**	22	Net demand – water is recycled
Misting Sprays - Dumper	6	180**	65	
Spray Bars Dumper Bldg.	4	180**	43	
Peak Demands	20.5		145	

* based upon 5 sprays x 30 seconds x 3 cycles per barge
** based upon three hours to dump train and load barge.

FSD intends to use recycled water from the secondary settling cell, for the dumper and conveyor spill pan flush outs. However in the dry summer months there likely will not be sufficient recycled water available and municipal water will have to be utilized. These flush outs will require a high flow rate, up to 35 L/sec, to provide the flushing effect. However rather than drawing directly off the municipal water system, the design will provide fresh make up water to the secondary settling cell at a relatively low rate and when there is adequate volume of water available, pump to the flush out systems (in effect supplying relatively clean recycle water). A makeup rate of 5 L/sec to the secondary settling cell will be adequate. Note that the makeup water draw will not be concurrent with dust suppression activities.

Table 3. Recycled Water Usage Volume Calculations

Water use for Wash downs - (Not concurrent with dust suppression)	Peak flow rate (l/s)	Normal max time per day - minutes	Volume per day m3	Comments
Make up water to secondary settling cell	5	800	240	Dry summer months only
Wash Hoses	8	60	29	-
Peak Demands	13	-	269	-

In summary, the maximum flow demand for the DTB facility from the City of Surrey water system will be approximately 20.5 L/sec (270 Igpm); which equates to an approximate maximum daily usage of the following:

Maximum day volume = 145 m^3 +269 m^3 = 414 m^3 /day

4.2.1 Treated Discharge Water Quality – Preliminary Analyses for Design

As part of the design and permitting process for the discharge program, laboratory analyses were conducted on 600 mg/L solutions of Power River Basin (PRB) coal and water to evaluate potential BOD5, metals, polycyclic aromatic hydrocarbons (PAH), volatile organic compounds (VOC), sulphate and phenols concentrations in wastewater proposed for offsite disposal. These analyses were completed to evaluate water quality based on potential residence times in the treatment system (up to 2 weeks) and included samples from 600 mg/L solutions that were allowed to settle for one and two weeks prior to analysis. Analyses were conducted on water decanted from the samples, and on water collected from the samples after they were physically agitated to redistribute coal particles in the solution. The results of these analyses are summarized in Table 1. The data show a limited number of metals and organics were detected (Table 6, Appendix A). None of the detected parameters were above available Schedule B-Restricted Waste Criteria.

Table 4. Detected Parameters - 600 mg/L PRB coal and water solutions

Parameter	Units	Detection limit	< 2 mm Coal @ 600 mg/L - 1 WEEK	< 2 mm Coal @ 600 mg/L - 1 WEEK (agitated)	< 2 mm Coal @ 600 mg/L - 2 WEEK	< 2 mm Coal @ 600 mg/L - 2 WEEK (agitated)	< 2 mm Coal @ 600 mg/L – *analyzed upon preparation*	GVSD&D Restricted waste criteria
			17-Sep-13	17-Sep-13	24-Sep-13	24-Sep-13	10-Sep-13	
pH	pH units	0.01	7.15	7.12	7.36	7.06	7.34	5.5 to 10.5
Aluminum, total	mg/L	0.05	<0.05	0.21	<0.05	0.42	0.06	50
Barium, total	mg/L	0.05	<0.05	0.28	<0.05	0.37	0.09	-
Copper, total	mg/L	0.002	<0.002	<0.002	<0.002	0.003	-	2

Iron, total	mg/L	0.1	<0.1	0.2	<0.1	0.5	-	10
Magnesium, total	mg/L	0.1	<0.1	0.1	<0.1	0.2	-	-
Manganese, total	mg/L	0.002	<0.002	0.003	<0.002	0.007	-	5
Sodium, total	mg/L	0.2	0.9	1	1.1	1.3	0.2	-
Strontium, total	mg/L	0.01	<0.01	0.04	<0.01	0.07		-
Benzo (a) pyrene	ug/L	0.01	<0.01	0.01	<0.01	<0.01		-
Phenanthrene	ug/L	0.1	<0.10	0.17	<0.10	<0.10	0.11	-
Total PAH	ug/L	-	n/d	0.18	n/d	n/d	0.11	50
Chloroform	ug/L	1	6.2	5.6	6.2	6.5	-	-
Methylene chloride	ug/L	3	<3.0	6.8	<3.0	<3.0	-	-

n/d – not detected

4.2.2 System test

It is important to note that further analytical sampling will be required before any discharge of treated wastewater from the facility to sanitary sewer. The full scope of the system test will be determined in consultation with Metro Vancouver and the Port. However at a minimum, we anticipate collecting flow rate data, as well as analytical samples (at various concentrations of coal particulate) for the same parameters evaluated in support of the original sanitary sewer discharge permit application, and / or those parameters required as part of the monitoring program for the permit: pH and turbidity (*in situ* and laboratory), BOD, TSS, chloride, sulphate, phenols, VOC (including BETX), PAH, Oil & Grease, total and dissolved metals. These data would be reported to Metro Vancouver and the Port prior to any offsite discharge and would be used to fine tune the water treatment system as needed to ensure conformity with Schedule "B" Restricted Wastes criteria of Bylaw 299.

4.3 Overspray from Barge Sprays

FSD is proposing to use the municipal water supply for onsite dust suppression. The bulk of this water will be managed onsite for treatment and re-use. However, some of the water will be applied to the coal in the loaded barges before leaving the Berth. Overspray into the Fraser River will be minimized by ensuring that the sprays have a consistent flow (by use of pressure regulating valves). Nevertheless in windy conditions, some minor overspray is unavoidable. The water will be applied under pressure in an irrigation type spray with a nozzle diameter of 0.65". The median droplet size for the barge dust suppression system is estimated to be 1.5 mm.

FSD is proposing to use the municipal water supply for onsite dust suppression. The bulk of this water will be maintained onsite for treatment and subsequent re-use. However, non-recycled water will be used during barge loading (at the barge loader) and will be applied to the coal in loaded barges before leaving the Berth. Fine misting sprays (capacity of 1 L/s) would be used at the barge loader and up to five (5) portable spray units (e.g. Big Guns® or similar) would be used on the loaded barges. Note that watering the loaded barges would not be necessary year round; but would be required to varying degrees during drier conditions. Spray frequency and duration can be controlled by a PLC program to minimize the risk of excessive water use.

The portable spray units can be modified with respect to position and angle to control spray

dispersion. However, there is some potential for overspray into the surrounding environment when the units are in use at the loaded barges. Overspray from the mister used at the barge loader itself may occur during windy conditions.

The municipal water supply contains a chlorine residual (≤ 1 mg/L) to inhibit bacterial growth in the distribution lines (Ministry of Environment, 1999)[2]. Chlorine can impact water quality and aquatic life depending on the nature of the receiving environment, the chlorine concentration and the duration of exposure to chlorine. The maximum BC Approved Water Quality Guidelines for chlorine in freshwater and estuarine environments are 0.1 mg/L and 0.04 mg/L respectively (Ministry of Environment, 1999). The Canadian Council of the Minister of the Environment (CCME) has established guidelines for reactive chlorine species in freshwater (0.0005 mg/L) and chlorine produced oxidants in marine water (0.0005 mg/L)[3].

Chlorine is reactive and volatile, and when present in water, will readily convert to gas form when exposed to open air. Chlorine has a boiling point of -34.04 °C; and is a gas under environmental conditions (HSDB 2009) (ATSDR, 2010)[4]. Chlorine gas dissolves in water (7.3 g/ L at 20 °C) and immediately converts to hypochlorous acid (HOCl) and chloride (Cl-) at typical environmental pH levels (ATSDR, 2010). Because chlorine is reactive, it is short lived in the environment. Chlorine quickly reacts with organic and inorganic matter and is converted almost immediately once it dissolves in water. Chlorine in the air is broken down via photolysis and its half-life in lower atmosphere is measured in minutes (ATSDR, 2010).

Given these characteristics, the use of municipal water for dust suppression at the barges is not expected to negatively affect Fraser River water quality. The chlorine is expected to be converted and / or broken down through direct contact with the coal; and through exposure to the open air through pressurized discharge from the nozzles on the misting spray and portable gun units.

Prior to coal being delivered onsite, FSD will conduct in situ and analytical chlorine testing in the Fraser River before and after the mobile spray and barge loader misting units are installed and operational. The results will be used to determine if some level of de-chlorination (e.g. application of sodium thiosulphate - $Na_2S_2O_3$) may be required for use on the dust suppression water supply. Additional testing will be conducted once the site is fully operational and the mister and mobile spray units are in use for coal dust suppression. It is understood that non-detect results for chlorine will be acceptable to the Port in the context of the operating site.

[2] Ministry of Environment. Ambient Water Quality Criteria for Chlorine. Overview Report. December 15, 1989

[3] Canadian Water Quality Guidelines for the Protection of Aquatic Life. REACTIVE CHLORINE SPECIES

[4] ATSDR. Toxicological Profile. Chlorine. November 2010.

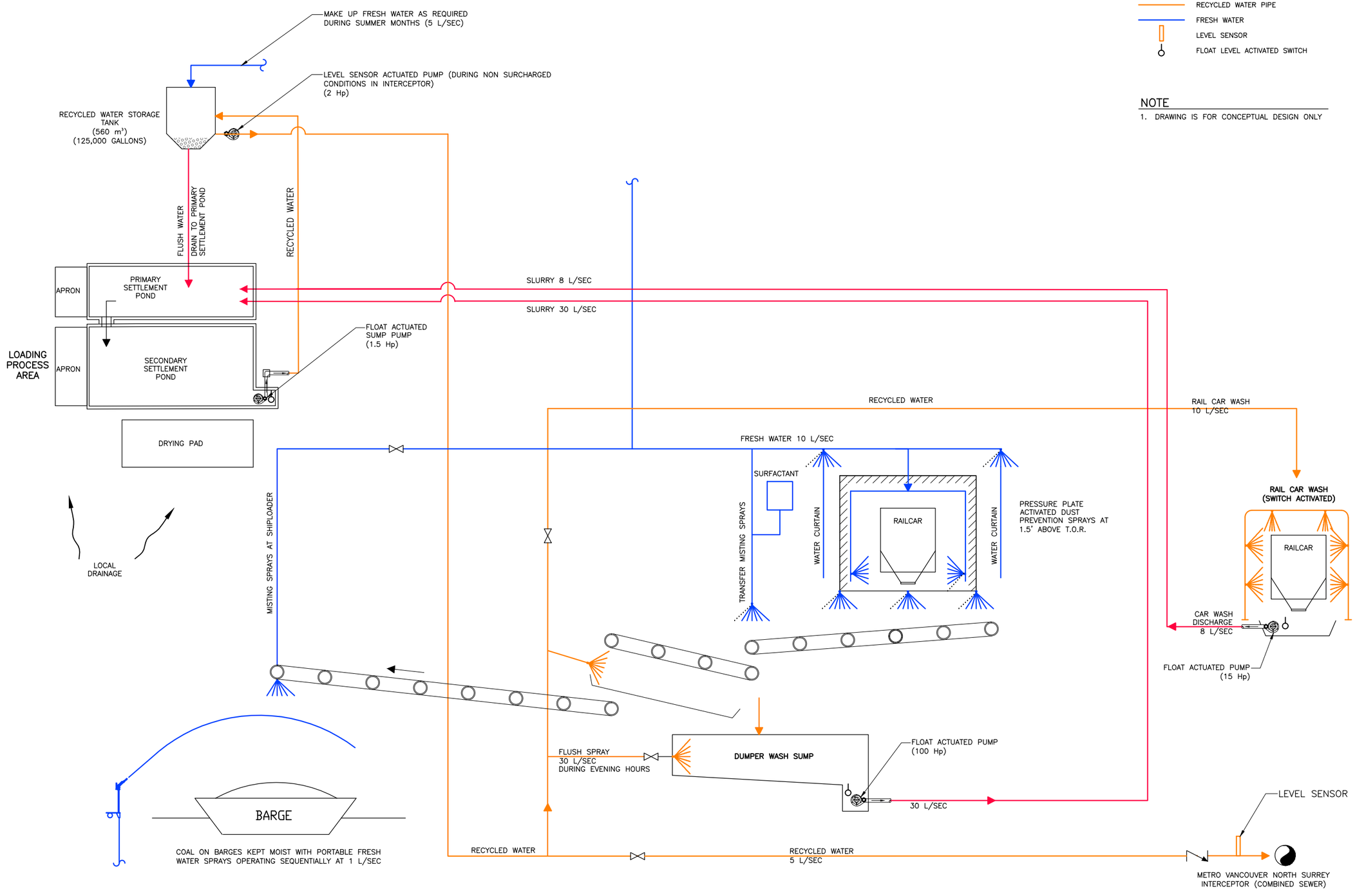

LEGEND

- PUMP
- VALVE
- SLURRY PIPE
- RECYCLED WATER PIPE
- FRESH WATER
- LEVEL SENSOR
- FLOAT LEVEL ACTIVATED SWITCH

NOTE

1. DRAWING IS FOR CONCEPTUAL DESIGN ONLY

REFERENCE DRAWINGS	
DRAWING NUMBER	REV.

NOT FOR CONSTRUCTION

NO.	BY	DATE	DESCRIPTION
P2	BH	2014-07-28	ISSUED FOR REVIEW

REVISION

SEAL:

DATE:

CONSULTANT:

Omni ENGINEERING INC.
#206 E. HASTINGS STREET
VANCOUVER, BC V5K 2A9
PH: 604 - 298 - 0508
FAX: 604 - 298 - 0536

CLIENT:

FRASER SURREY DOCKS LP
Pacific Rim Stevedoring Ltd.

PROJECT:

DIRECT TO BARGE FACILITY
ENVIRONMENTAL PROTECTION SYSTEMS

DRAWING TITLE:

DISCHARGE TO SANITARY SEWER SCHEMATIC

ENGINEER:	DS	DATE:	2014-07-28
DESIGN BY:	PC	SCALE:	AS SHOWN
DRAWN BY:	BH	ACAD FILE NO:	2113-SK002B
DRAWING NUMBER:	2113-SK002B	REVISION NUMBER:	P2

Filename: Z:\Omni Projects\2113 Fraser Surrey Docks - Dust Suppression\Omni Drawings\2113-SK002B.dwg - DISCHARGE TO SANITARY SEWER SCHEMATIC
Last Saved: Jul. 29/14 10:52am Plotted: Jul. 29/14

5.0 DUST SUPPRESSION BY WATER SPRAYS

5.1 Location of Dust Suppression Water Sprays

1. Railcar Dumper – misting sprays which produce very small droplets to knock fugitive dust out of the air, plus larger nozzle sprays to wet coal as it is being dumped. Misting sprays will use municipal water (necessary to avoid nozzle clogging). The large nozzle sprays will use *recycled water* (see following section).

2. Railcar Wash – after dumping the railcars will pass under a spray arch to remove residual coal. The spray arch will use recycled water.

3. Transfers will have misting sprays, similar to the dumper, using municipal water. A surfactant will be added to the water to mitigate dusting of the coal on the barge.

4. The barge loader will have fine misting nozzles to mitigate dust generated by falling coal. These will be supplied with municipal water.

5. Coal Barges – After loading, the coal barges will be wetted down by portable water sprays (Big Guns) located on the berth which will be supplied with municipal water. The requirement to wet down the barges will likely not be necessary during the wet winter months. Spray gun sequencing, frequency and duration will be controlled by a PLC program to minimize risk of excessive water application.

Typical Large Style Sprayer

As the proposed sprays are not fixed, the sprays can be located on the berth to suit the configuration of coal on the barge and the prevailing wind direction.

Typical Railcar Wash in Operation

5.1.1 Example of Transfer Misting Sprays

The location of the sprays at the conveyor transfer points will be both at the incoming point, the headbox, and outgoing end, or tail end of conveyor. A typical arrangement can be seen below.

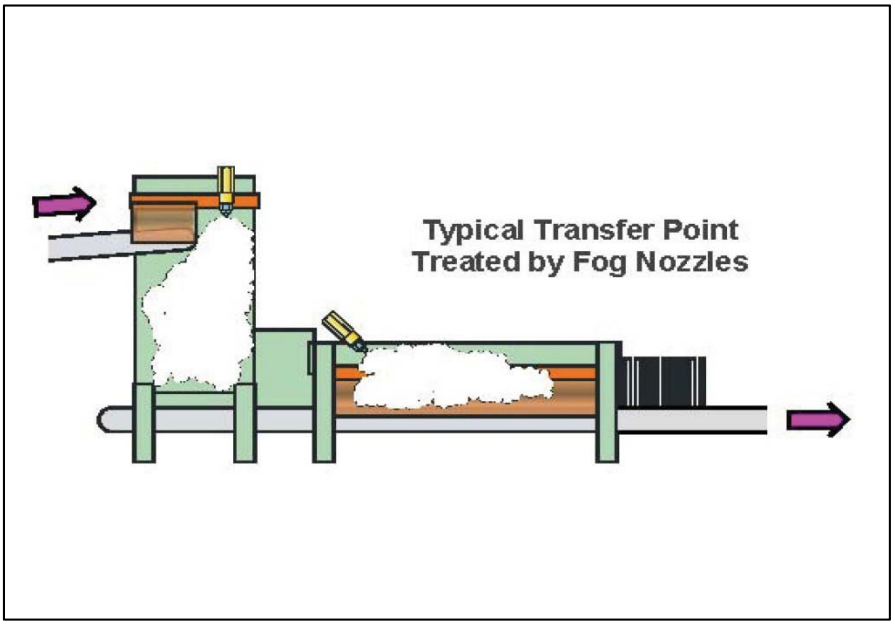

Typical Misting Sprays

5.1.2 Example of Dumper Sprays

The proposed design for the dumper building includes fine misting sprays along its length and at the outgoing and ingoing ends of the building to act as a dust curtain.

There will also be wet down nozzles which will operate at the conclusion of the dumping operation for approximately 20 seconds (to be confirmed with operating experience). The system will have relatively large nozzles and will be using recycled water to provide the volume of water required for maximum efficiency.

6.0 SPILL PREVENTION AND RESPONSE

As part of the Metro Vancouver and Port approvals, FSD is expected to develop and implement project specific spill prevention and response permit strategies. Exact details can be found in the FSD Emergency Response Plan, however the following is general overview of spill prevention and response plan.

Routine inspections and maintenance will be performed on all components of the DTB facility, including mobile machinery (pickup trucks, skid steer with sweeper, water truck, propane or electric forklifts, on road diesel tractor/trailer). Vegetable based oils will be used in barge loader and warping equipment and no hazardous materials storage or use will occur in the wastewater collection area(s).

All wastewater discharges will be routed through the Loading Area Settling Pond. The submersible pump will be fitted with a 'Hand-Off-Automatic' button. In the event of a spill, the 'off' button would be pushed to prevent the spilled material from being discharged to the

sanitary sewer.

Although hazardous materials storage will not be permitted in the processing areas, hydrocarbon spills from operating equipment may occur. Hydrocarbons would generally be expected to float on the water surface of the Loader Area Settling Pond and personnel could deploy booms, spill pads etc. in response. The ponds can also be fitted with skimmers to capture floating hydrocarbons. Finally, the pump can be shut down in the event of such a spill to eliminate the potential for discharge to the sanitary sewer.

After an initial spill response, analytical samples would be collected from multiple depths in the settling pond for comparison with the Restricted Waste Criteria. Treatment would be implemented as necessary to ensure compliance with the Bylaw. In the event of a spill the FSD would be exercised however, examples of generic spill response procedures that will be implemented onsite are as follows:

- Confirm the safety of all personnel and secure the area (as needed)
- Eliminate ignition sources
- Identify spilled product, associated hazards and clean up requirements
- Determine if the spill can be contained and cleaned up by onsite staff. Spills that cannot be managed by onsite personnel should be directed to the District and other agencies as required.
- Stop the flow of spilled materials if safe to do so
- Contain spilled materials if safe to do so
- Clean up and dispose of spilled product and used response materials consistent with the Environmental Management Act
- Notify the Environmental Protection Division of Environment Canada and the Provincial Emergency Program (PEP) in the event of a reportable spill, as defined by the Spill Reporting Regulation of the Environmental Management Act
- Spills of flammable Class 3 Liquids (e.g.) gasoline, fuel oil) ≥ 100 L are reportable
- Investigate causes of the spill and identify required changes to hazardous materials management strategies and spill response plans.
- Complete spill reporting forms ensuring the following information is provided:

    - Name of the person(s) reporting the spill
    - Witnesses of the spill
    - Date, time and location of the spill
    - Source of spill
    - Type and estimated volume of product
    - Nature of the receiving environment (soil, water)
    - Spill response measures
    - Estimated volume recovered
    - Impact of the spill on terrestrial and / or aquatic resources
    - Required remediation (if any)
    - Measures take to prevent similar spills in future
    - Agencies made aware of the spill (as needed)

APPENDIX A

Stokes Law
Kwantlen Park IDF Curve

STOKES LAW:

$$V_c = \frac{g\,(P_s - P_w)\;d^2}{18\,\upsilon}$$

Vc = terminal velocity of a particle

g = gravitational acceleration **9.8 m/sec^2**

P_s = Density of Solids - usually taken as **2000** kg per m3

P_w = Density of Water – **1000** kg per m3 (ignoring temperature effects)

d^2 = diameter of particle in meters squared Example 15 microns = **225 x 10^{-12} m^2**

υ = Absolute viscosity of water. The general value of water is 1 centipoise which is equivalent to $\frac{.001 \text{ Newton – second}}{m^2}$

Be careful here as viscosity of water is temperature sensitive. At 20 degrees C it is about one centipoise but at 5 degrees C it increases to around 1.5 A good value to use is **.0015** as most of our work concerns cold winter conditions

Sample Calculation

$$V_c = \frac{g\,(P_s - P_w)\;d^2}{18\,\upsilon}$$

$$= \frac{9.8 \text{ m/sec}^2 \times (2000 - 1000)\text{ kg/m}^2 \times 225 \times 10^{-12}\text{ m}^2}{18 \times .0015 \text{ Newton seconds/m}^2}$$

= .000081 m/sec

=.081 mm/sec

This is a good typical value to use. Other particle velocities will be in proportion to the square of their diameter versus 15 microns

Note that strictly speaking Stokes Law is only valid for Reynolds Numbers 100 to 100,000

SHORT DURATION RAINFALL INTENSITY DURATION FREQENCY CURVE DATA FOR SURREY KWANTLEN PARK B.C.
GUMBEL METHOD OF MOMENTS BASED ON RECORDING RAIN GUAGE DATA FOR THE PERIOD 1962 - 1996 (35 YEARS)

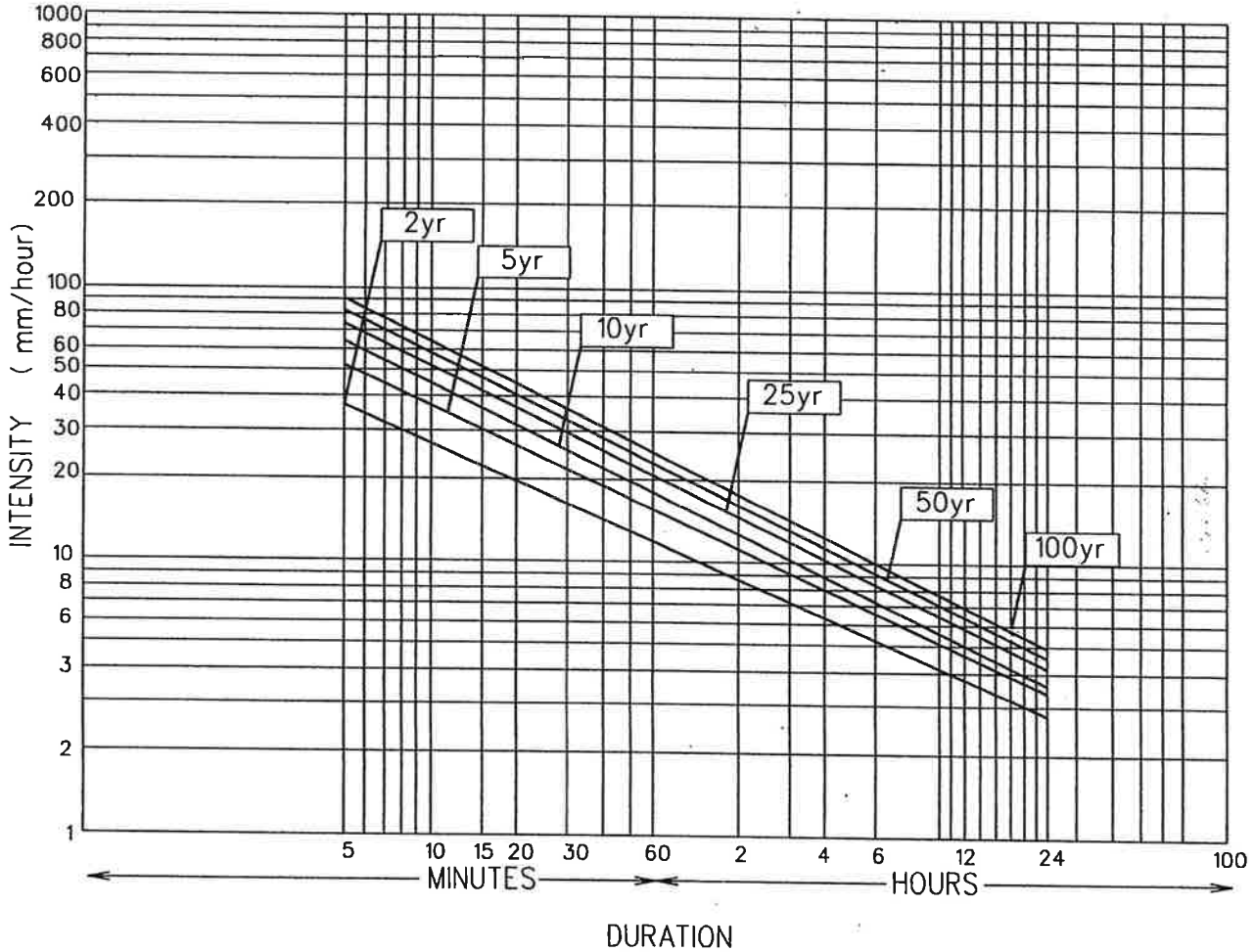

prepared by
Atmospheric Environment Service ,
Environment Canada

All Dimensions Shown In Millimetres, Unless Otherwise Noted			
3			
2			
1			
	Revision Date	Approved	

SURREY
CITY OF PARKS
SUPPLEMENTARY STANDARD DRAWINGS

Title	RAINFALL IDF CURVES KWANTLEN PARK
Approved	
Date	
Drawn By	Surrey Engineering
DRAWING NUMBER	FIGURE 5.3A

APPENDIX B

Information On Dust Suppression Sprays

INDUSTRIAL Applications

the original BIG GUN® SPRINKLER

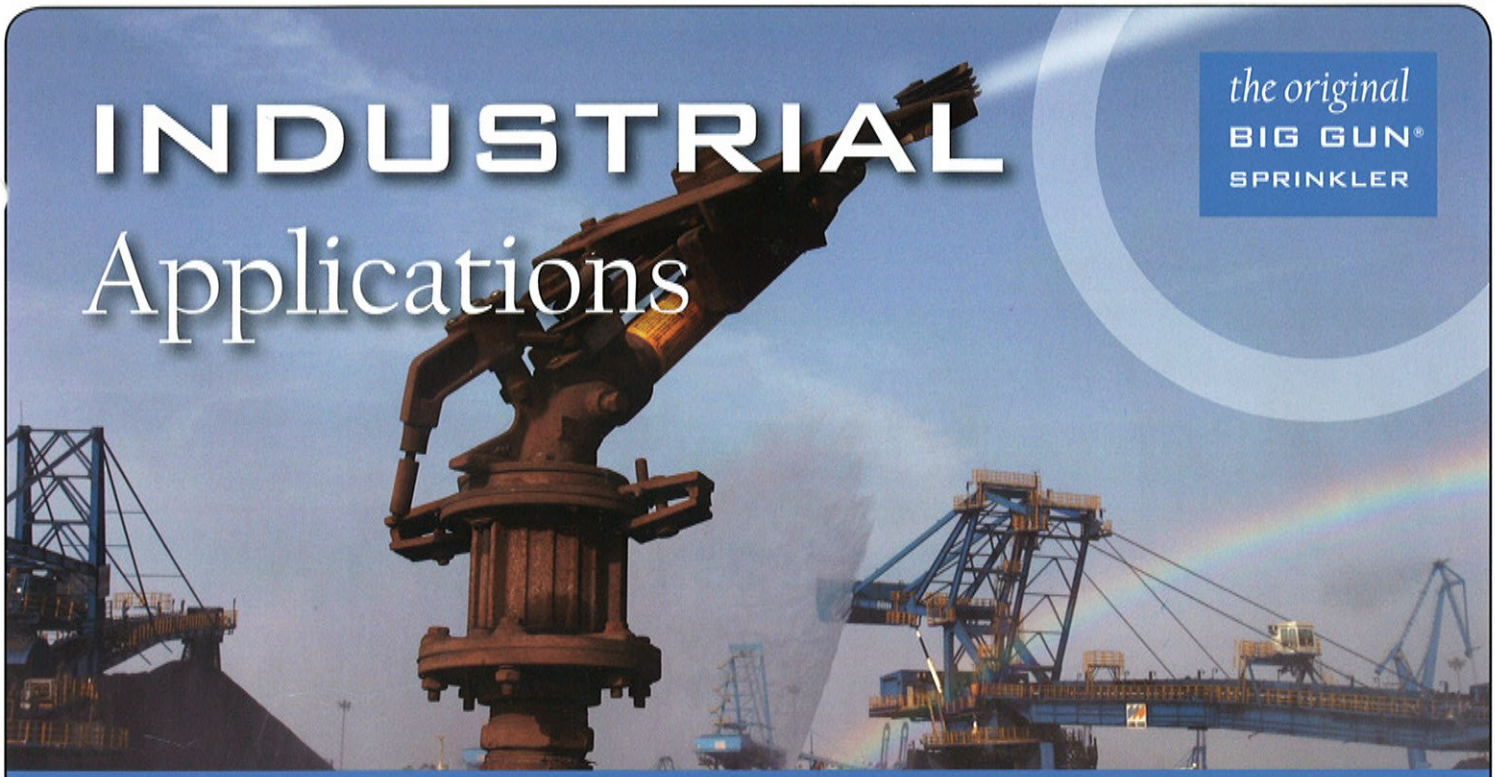

Why choose a Nelson Big Gun®

- The **Nelson name** is synonymous with the best quality available.
- **Heavy-duty construction** ensures long wear life & reliability.
- **Greatest range of options.** Full & part-circle sprinklers available in a variety of trajectory, nozzle & coating options.
- **Valve combinations available** for maximum system efficiency.
- **Easy to operate, maintain and repair** with readily available parts and documentation.

Advantages for Industrial Applications

- Efficient dust suppression.
- High volume in short time.
- Rugged durability in dirty & corrosive conditions.
- Large nozzles less likely to plug, filtration requirements minimal.
- All ball bearings are sealed.

NELSON
WWW.NELSONIRRIGATION.COM

IT'S THE ONE FOR THE JOB

Nelson Big Gun® sprinklers are ideal for a wide range of industrial applications. With a full range of models available (see *The Original Big Gun®* brochure), flow rates of 30-1200 GPM (6.8-275 m^3/hr) can be achieved with maximum uniformity to match a variety of needs.

MINING DUST SUPPRESSION

The rugged durability of Nelson Big Gun® sprinklers make them a favorite for dust suppression. Big Guns are preferred because of the ability to move a large amount of water in a short time. The large nozzle is less likely to plug and the filtration requirements are minimal. All bearings on the gun are sealed ball bearings. Some sprinklers are mounted on high towers in order to throw over the piles. Alternatively, a high trajectory Big Gun sprinkler (fixed 43° and adjustable 15-45° models available) can achieve the necessary stream height to reduce tower height and clear the top of the piles.

SPECIAL OPTIONS:

ANODIZED, POWDER COATED AND STAINLESS STEEL BIG GUNS® for sprinkling with corrosive waters.

COUNTER BALANCE KIT for operation of the Big Gun® with a tilted riser.

WEDGE INSERT for modified trajectory.

HEAVY DUTY BRONZE BRAKE for operation in environments with airborne, abrasive, dust particles (100 Series only).

BIG GUN® PERFORMANCE FOR 43° MODELS

R = Radius of Throw; **H** = Maximum Stream Height; **rH** = Distance from Big Gun to Maximum Stream Height
(See *The Original Big Gun®* brochure or www.nelsonirrigation.com for performance information of 24° models.)

SR75DS TAPER RING NOZZLE — 43° TRAJECTORY (U.S. UNITS - RADIUS IN FEET)

	0.4"				0.45"				0.5"				.55"				.6"				.65"				.7"				.75"				.8"			
PSI	GPM	R	H	rH	GPM	R	H	rH	GPM	R	H	rH	GPM	R	H	rH	GPM	R	H	rH	GPM	R	H	rH	GPM	R	H	rH	GPM	R	H	rH	GPM	R	H	rH
30	—	—	—	—	—	—	—	—	37	66	28	49	45	66	30	50	55	69	30	51	64	72	31	55	75	76	32	56	87	78	33	58	99	80	34	60
40	27	62	30	49	35	67	31	50	43	71	31	52	52	75	33	53	63	79	33	56	74	82	35	61	87	85	35	63	98	89	37	64	112	92	39	66
50	30	67	31	50	39	72	32	52	48	78	32	54	59	81	34	56	70	85	36	60	83	88	39	64	95	92	42	67	109	96	43	68	123	99	45	71
60	33	70	32	52	42	77	33	55	53	82	33	59	64	87	35	62	77	92	38	63	91	95	43	67	104	99	46	70	120	102	47	71	136	106	48	73
70	36	73	33	54	45	81	33	58	57	87	34	62	69	92	37	66	83	97	43	69	98	101	46	72	113	106	49	75	129	108	50	76	147	113	52	78
80	39	76	34	58	49	86	36	62	61	93	37	66	74	97	41	70	89	102	45	73	105	107	48	77	121	111	52	80	138	114	53	81	158	118	55	83

SR75DS TAPER RING NOZZLE — 43° TRAJECTORY (METRIC UNITS - RADIUS IN METERS)

	10.2 mm				11.4 mm				12.7 mm				14.0 mm				15.2 mm				16.5 mm				17.8 mm				19.1 mm				20.3 mm			
kg/cm²	M³/H	R	H	rH	M³/H	R	H	rH	M³/H	R	H	rH	M³/H	R	H	rH	M³/H	R	H	rH	M³/H	R	H	rH	M³/H	R	H	rH	M³/H	R	H	rH	M³/H	R	H	rH
2.50	—	—	—	—	7.6	23	9.2	14	9.4	24	9.5	15	11.4	26	9.7	15	13.6	27	9.9	16	16.0	28	10.2	17	18.5	30	10.3	18	21.1	31	10.7	19	24.0	32	11.5	20
3.00	6.6	23	9.2	15	8.3	25	9.5	15	10.3	26	9.7	16	12.4	28	10.1	16	14.9	29	10.4	17	17.6	30	11.0	19	20.3	31	11.0	19	23.1	33	11.6	20	26.3	34	12.2	21
3.50	7.1	24	9.5	15	9.0	26	9.8	16	11.1	28	9.8	16	13.4	29	10.4	17	16.1	31	11.0	18	19.0	31	11.9	20	21.9	33	12.8	20	25.0	34	13.1	21	28.4	36	13.7	22
4.00	7.6	25	9.6	15	9.6	26	9.8	16	11.9	29	9.9	17	14.4	30	10.5	18	17.2	32	11.3	19	20.3	33	12.2	20	23.4	35	13.2	21	26.7	36	13.4	21	30.4	37	14.1	22
4.50	8.1	26	9.7	16	10.2	28	9.9	16	12.6	30	10.0	17	15.2	32	10.7	18	18.3	33	11.7	19	21.5	35	12.6	20	24.8	37	13.5	21	28.4	38	13.8	22	32.3	39	14.4	22
5.00	8.5	26	10.1	16	10.8	29	10.1	18	13.3	32	10.4	19	16.1	33	11.3	20	19.3	35	13.1	21	22.7	36	14.0	22	26.1	38	14.9	23	29.9	39	15.2	23	34.0	41	15.8	24
5.50	8.9	27	10.4	18	11.3	31	11.0	19	13.9	33	11.3	20	16.9	35	12.5	21	20.2	36	13.7	22	23.8	38	14.6	24	27.4	40	15.9	24	31.3	41	16.1	25	35.7	42	16.8	25
6.00	9.3	28	10.7	19	11.8	31	11.9	20	14.6	34	12.2	21	17.6	36	13.7	23	21.1	37	14.3	24	24.8	39	15.3	25	28.6	41	16.8	26	32.7	42	17.0	26	37.2	43	17.7	27

SR100DS TAPER BORE NOZZLE — 43° TRAJECTORY (U.S. UNITS - RADIUS IN FEET)

	0.6"				0.65"				0.7"				.75"				.8"				.85"				.9"				1.0"			
PSI	GPM	R	H	rH	GPM	R	H	rH	GPM	R	H	rH	GPM	R	H	rH	GPM	R	H	rH	GPM	R	H	rH	GPM	R	H	rH	GPM	R	H	rH
50	74	98	36	59	87	108	40	65	100	117	44	71	115	120	44	72	130	123	46	75	150	125	46	76	165	129	47	78	204	136	48	82
60	81	102	39	63	96	109	44	68	110	121	47	74	126	124	48	75	143	127	49	77	164	131	49	79	182	133	50	81	224	140	51	85
70	88	105	43	68	103	114	47	73	120	125	50	79	136	128	51	81	155	131	53	83	177	133	54	85	197	138	55	87	243	144	56	91
80	94	111	46	74	110	119	49	79	128	129	53	84	146	132	54	86	165	135	56	88	189	138	56	90	210	142	59	92	258	149	60	97
90	100	118	49	79	117	123	52	83	135	133	56	87	155	136	57	90	175	139	59	93	201	143	60	94	223	146	62	95	274	153	64	99
100	106	120	51	82	123	128	54	87	143	137	58	92	163	140	59	93	185	143	61	95	212	148	62	98	235	150	65	101	289	157	67	105
110	111	122	52	84	129	132	56	89	150	141	60	94	171	144	62	96	195	147	64	98	222	151	65	100	247	154	67	103	304	162	69	108
120	115	124	53	85	135	135	56	90	157	145	61	95	179	148	63	99	204	151	65	103	232	155	67	105	258	159	69	107	320	166	71	111

SR100DS TAPER BORE NOZZLE — 43° TRAJECTORY (METRIC UNITS - RADIUS IN METERS)

	15.2 mm				16.5 mm				17.8 mm				19.1 mm				20.3 mm				21.6 mm				22.9 mm				25.4 mm			
kg/cm²	M³/H	R	H	rH	M³/H	R	H	rH	M³/H	R	H	rH	M³/H	R	H	rH	M³/H	R	H	rH	M³/H	R	H	rH	M³/H	R	H	rH	M³/H	R	H	rH
3.5	15.6	30	11	18	18.3	33	12	20	21.0	36	13	22	24.1	37	14	22	27.5	38	14	23	31.5	38	14	23	34.8	39	14	24	42.8	42	15	25
4	18.0	31	12	19	21.1	33	13	21	24.6	37	14	22	27.8	38	14	23	31.2	38	15	23	36.2	40	15	24	40.4	40	15	25	49.5	42	15	26
5	20.1	32	13	21	23.6	35	14	23	27.5	38	15	24	31.2	39	16	25	34.9	40	16	26	40.5	41	17	26	45.2	42	17	27	55.6	44	17	28
6	22.1	35	15	24	25.9	37	16	25	30.1	40	17	26	34.3	41	17	27	38.2	42	18	28	44.5	43	18	28	49.5	44	19	29	60.5	46	19	30
7	23.8	37	16	25	27.9	39	17	27	32.5	42	18	28	37.0	43	18	28	41.3	44	19	29	48.0	45	19	30	53.5	46	20	31	65.5	48	21	32
8	25.5	38	16	26	29.7	41	17	27	34.8	44	18	29	39.4	45	19	30	44.1	46	20	31	51.2	47	20	31	57.2	48	21	32	70.2	50	21	33

SR150DS TAPER BORE NOZZLE — 43° TRAJECTORY (U.S. UNITS - RADIUS IN FEET)

	0.7"				0.8"				0.9"				1.0"				1.1"				1.2"				1.3"			
PSI	GPM	R	H	rH	GPM	R	H	rH	GPM	R	H	rH	GPM	R	H	rH	GPM	R	H	rH	GPM	R	H	rH	GPM	R	H	rH
50	100	117	44	71	130	123	46	75	165	129	47	78	205	136	48	82	255	140	49	85	300	149	50	90	350	153	51	93
60	110	121	47	74	143	127	49	77	182	133	50	81	225	140	51	85	275	145	52	88	330	154	53	94	385	157	54	96
70	120	125	50	79	155	131	53	83	197	138	55	87	245	144	56	91	295	151	57	95	355	158	59	100	415	161	60	101
80	128	129	53	84	165	135	56	88	210	142	59	92	260	149	60	97	315	162	61	105	380	163	64	106	445	167	65	112
90	135	133	56	87	175	139	59	93	223	146	62	95	275	153	64	99	335	165	65	107	405	168	68	109	475	171	70	114
100	143	137	58	92	185	143	61	96	235	150	65	101	290	157	67	105	355	167	68	110	425	172	71	113	500	176	73	116
110	150	141	60	94	195	147	64	98	247	154	67	103	305	162	69	108	370	172	70	115	445	176	74	118	525	180	76	121
120	157	145	61	97	204	151	65	103	258	159	69	107	320	166	71	111	385	177	72	119	465	180	77	122	545	183	79	123

SR150DS TAPER BORE NOZZLE — 43° TRAJECTORY (METRIC UNITS - RADIUS IN METERS)

	17.8 mm				20.3 mm				22.9 mm				25.4 mm				27.9 mm				30.5 mm				33.0 mm			
kg/cm²	M³/H	R	H	rH	M³/H	R	H	rH	M³/H	R	H	rH	M³/H	R	H	rH	M³/H	R	H	rH	M³/H	R	H	rH	M³/H	R	H	rH
3.5	23.0	36	13	22	29.8	38	14	23	37.8	39	14	24	46.9	42	15	25	57.1	43	15	26	68.3	46	15	28	80.1	47	16	28
4	24.6	37	14	22	31.9	38	15	23	40.5	40	15	25	50.1	42	15	26	61.0	44	16	27	73.0	47	16	28	85.7	48	16	29
5	27.5	38	15	25	35.7	40	16	26	45.2	42	17	27	56.0	44	17	28	68.2	47	18	30	81.7	49	18	31	95.8	50	19	32
6	30.1	40	17	26	39.1	42	18	28	49.5	44	19	29	61.3	46	19	30	74.7	50	19	32	89.5	51	20	33	105	52	21	35
7	32.5	42	18	28	42.2	44	19	29	53.5	46	20	31	66.3	48	21	32	80.7	51	21	34	96.6	53	22	35	113	54	22	36
8	36.9	44	18	29	45.1	46	20	31	57.2	48	21	32	70.8	50	21	33	86.3	53	22	36	103	54	23	37	121	55	24	37

Big Gun® Performance data has been obtained under ideal test conditions and may be adversely affected by wind, poor hydraulic entrance conditions or other factors. Test riser height of 3 feet (0.91 meters) above measurement surface. No representation regarding droplet condition, uniformity, application rate, or suitability for a particular application is made herein.

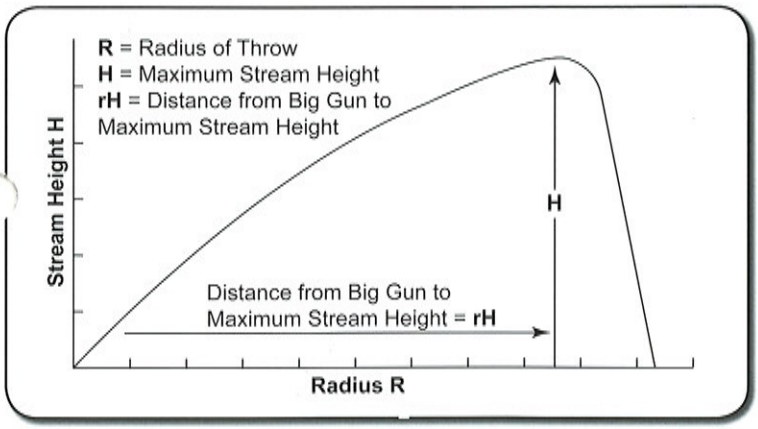

NOTE: The rotation speed of the gun is an important factor in some dust control applications. In general the rotation of the gun is 2-3 minutes when the mid-range pressure and nozzle are used. Drive arm speed adjustment can increase the rotation speed to twice as fast if more frequent wetting is wanted. A full circle Big Gun has ½ the water application rate of a half circle Big Gun with the same nozzle. The half circle Big Gun will pass over a specific location twice as often as a full circle Big Gun.

Contact the factory for information on the SRA100, SRA150 and the 12° Wedge Kit.

SR75DS 43°

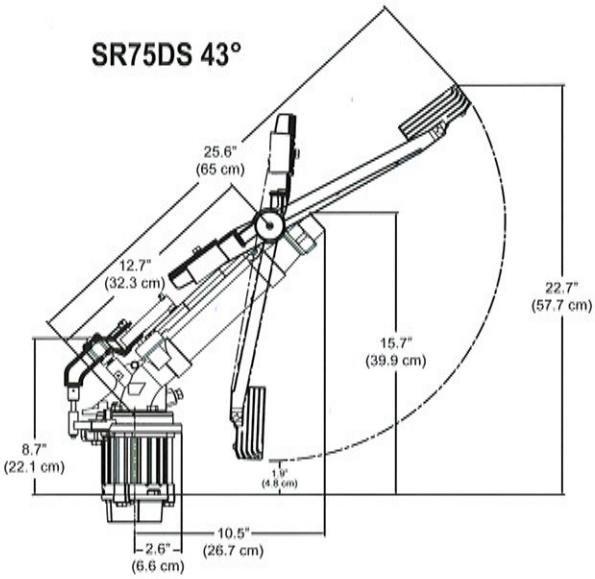

SR100DS 43°

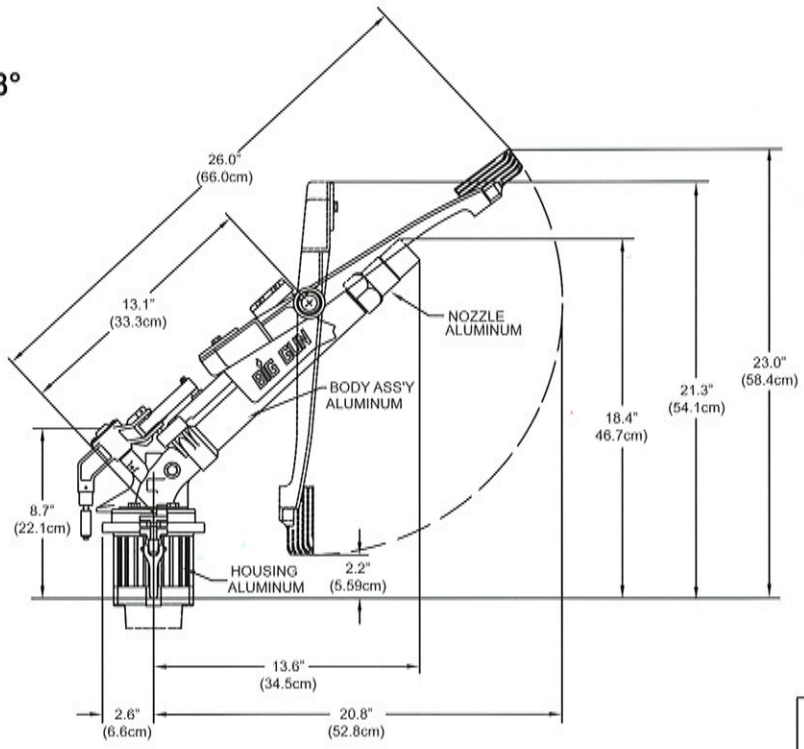

75 & 100 SERIES FLANGES

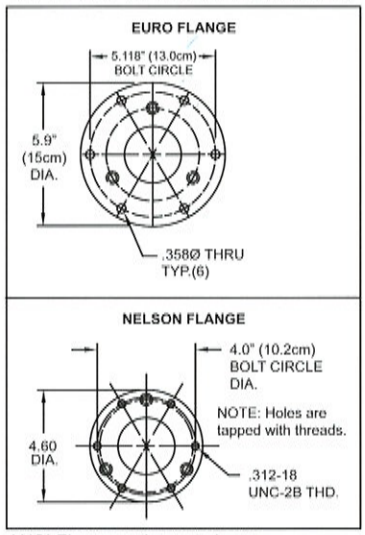

ANSI Flange option not shown.

SR150DS 43°

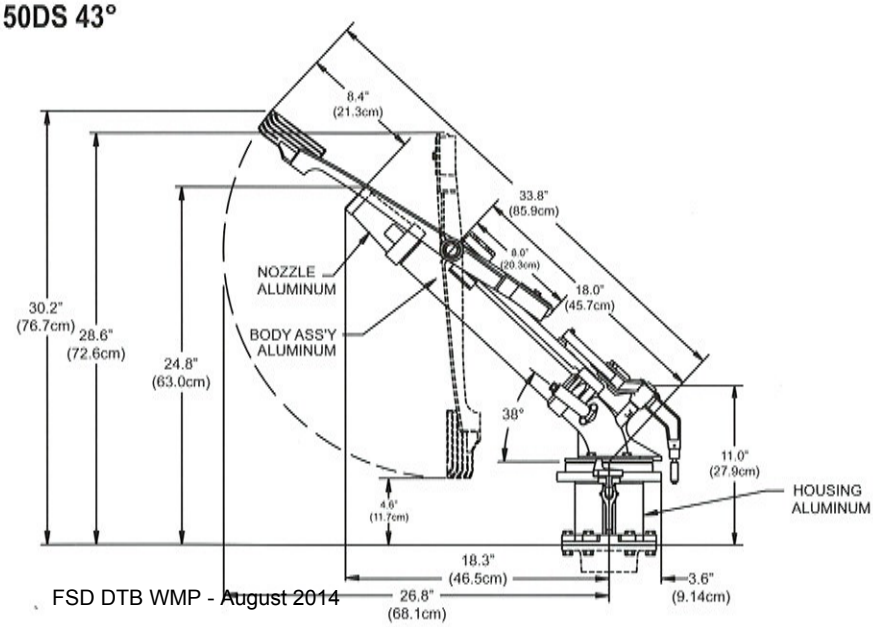

150 SERIES FLANGES

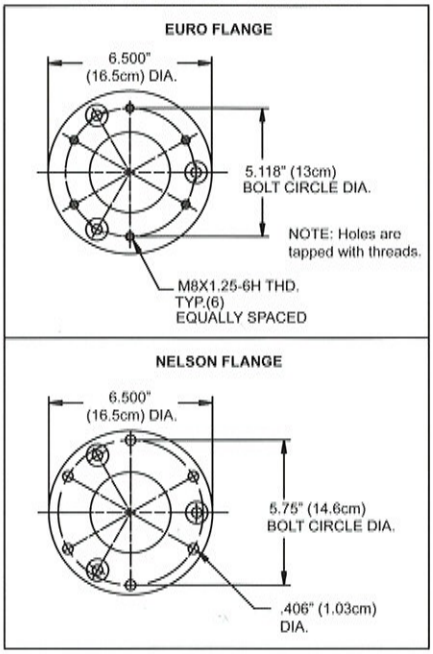

ANSI Flange option not shown.

Understanding drop size and the role it plays in your dust suppression application

Many important factors determine the overall effectiveness of a dust suppression spray nozzle. One of these factors is drop size, and understanding drop size and its role in nozzle performance will help you select the best spray nozzle for your application.

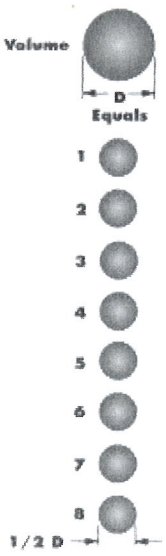

The volume of one large drop equals the volume of eight drops with diameters one-half the size of the large drop.

What is drop size?

Drop size is a by-product of atomization. The process of atomization begins by forcing liquid through a nozzle. The potential energy of the liquid, along with the geometry of the nozzle, causes the liquid to emerge as small ligaments. These ligaments then break up further into very small "pieces," which are usually called drops, droplets, or liquid particles.

Each spray provides a range of drop sizes; this range is referred to as drop size distribution. The drop size distribution is dependent on the nozzle type and will vary significantly from one nozzle type to another.

The importance of drop size in dust suppression stems from the role it plays in Airborne (Fugitive) Dust Knockdown. Once dust particles become airborne the dust reduction application becomes one of capturing, knocking down, or scrubbing many of the particles from the air or gas.

Studies have shown that dust-capturing efficiency depends strongly on the ratio of spray drop size to dust particle size.

Dust particles in the range of 2 to 3 microns were best captured with drop of about 100 times the size of the dust particles. For capturing much larger size dust particles, a drop size of approximately the same size or somewhat larger than the particle size would be adequate.

The drop size required for a specific application has an important effect on nozzle selection. Generally, air atomizing nozzles provide the finest drop size followed by hollow cone, flat fan, and full cone nozzles. The range of drop size and a relative comparison between Spraying Systems Co. nozzle drop sizes are represented in Data Sheet 13911-1. The importance of nozzle selection was also emphasized in another U.S. Bureau of Mines (NIOSH) study. In this study, it was shown that full cone and flat fan nozzles were two-thirds as effective as hollow cone nozzles in dust knockdown applications.

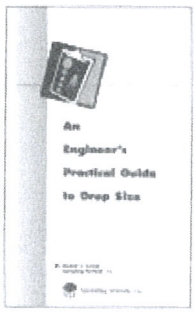

For more information on dust particle size and drop size, Spraying Systems Co. nozzle drop size comparison, or the U.S. Bureau of Mines (NIOSH) Study, contact your local Spraying Systems Co. sales engineer. Your sales engineer will be pleased to provide you with a copy of our "Engineer's Practical Guide to Drop Size". This handy reference tool offers an up-close look at drop size instrumentation, statistics and terminology, and more.

You'll also find the U.S. Bureau of Mines (NIOSH) Study to be a valuable source for technical information on dust knockdown performance of spray nozzles, the characteristics of particles and particle dispersions, and the relative comparison between Spraying Systems Co. nozzle drop sizes.

COMPARATIVE DROP SIZE DATA					
Drop Size Range Microns* Median Volume Diameter	Comparative Subject In Drop Size Range	Time For Drop To Fall 10 Ft. In Seconds	Drift In 3 MPH Wind 10 Ft. Fall Feet	No. of Drops Per Sq. In. If Applied At Rate of 1 Gal Per Acre	Nozzle Group No.*** Nozzle Types And Sizes Generally Falling In Given Drop Size Range
Below .001	Molecular Dimensions				
.001 To 0.1	Smoke	**			
0.1 To 1.0	Fumes	**			
2 To 5	Dry Fog	25400 4070	112000 18000	144060000 9220000	
10 To 40	Wet Fog	1020 64	4500 280	1152500 18000	I
50 To 100	Misty Rain	40 11	175 48	9200 1152	II
200 To 400	Light Rain	4.2 1.9	19 8	144 18	III
500 To 1000	Moderate Rain	1.6 1.1	7 5	9 1	IV
1000 To 2000	Intense Rain	1.1 0.9	5 4	1 21 Per Sq Ft	V
2000 To 5000	Heavy Rain	0.9 0.85	4 3.5	21 Per Sq Ft 1-1/3 Per Sq Ft	VI

Note: *One micron equals 1/25400 of an inch.

**Below 0.1 micron, drops are suspended in air due to molecular shock (Brownian Motion).

***See following pages for listing of Nozzle Group Nos., Nozzle Nos., and pressure ranges.

WhirlJet® SPRAY NOZZLES

STANDARD ANGLE SMALL CAPACITY

A

removable cap
⅛"-¾" NPT or BSPT (F)

AX

removable cap/slope-bottom design
⅛"-¾" NPT or BSPT (F)

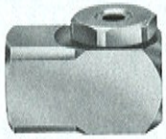

B

removable cap
⅛"-¾" NPT or BSPT (M)

BX

removable cap/slope-bottom design
⅛"-¾" NPT or BSPT (M)

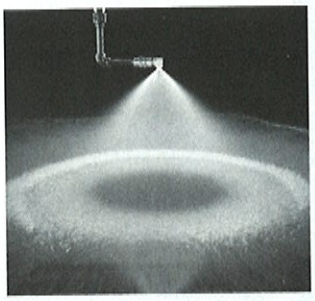

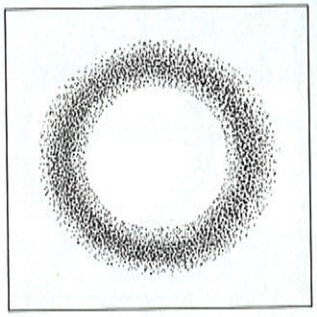

DESIGN FEATURES

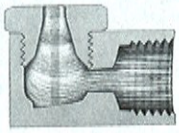

Standard WhirlJet spray nozzles feature a hollow cone spray pattern with a ring-shaped impact area and spray angles of 40° to 90°.

They produce a uniform distribution of small to medium-sized droplets over a wide range of flow rates and pressures.

WhirlJet nozzles produce excellent results in applications requiring good atomization of liquids at lower pressures... especially where quick heat transfer or effective air-borne droplet impingement is required.

WhirlJets also provide an important benefit with their large and unobstructed flow passages, which minimize or eliminate clogging.

A and B series small capacity WhirlJet spray nozzles are precision-machined from solid bar stock to exacting internal proportions. They have removable caps and the original design WhirlJet whirlchamber.

AX and BX series small capacity slope bottom WhirlJets feature the same uniform spray distribution and precision two-piece bar stock construction as the A and B series...plus the added advantage of the longer-life slope bottom design...to reduce the "drilling effect" of the fluid vortex in the whirlchamber.

COMMON APPLICATIONS

- Washing gas and air to remove fly ash and other products of combustion
- Gas cooling
- Water cooling
- Metal treating
- Product degreasing
- Suppression and control of fugitive dust
- Brine spraying
- Water aerating

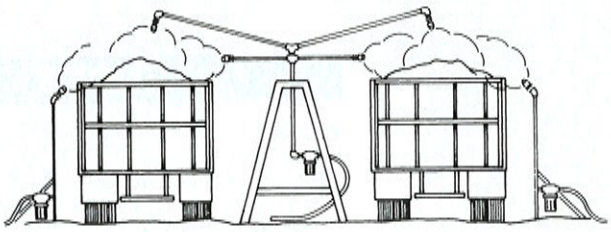

DUST CONTROL

ACCESSORIES

Split-Eyelet Connector	Pressure Gauge	Adjustable Ball Fittings	124 Strainer	Other Accessories
				• Pressure Regulators • Control Valves • Solenoid Valves • Swivel Connectors **SEE SECTION G FOR COMPLETE INFORMATION.**

PERFORMANCE DATA

Nozzle Inlet Conn. NPT or BSPT	NOZZLE TYPE STANDARD (F) Conn. A	(F) Conn. AX	(M) Conn. B	(M) Conn. BX	Capacity Size	Body Inlet Diam. Nom. Inches	Orifice Diam. Nom. Inches	CAPACITY (gallons per minute) 3 psi	5 psi	10 psi	15 psi	20 psi	30 psi	40 psi	60 psi	80 psi	100 psi	SPRAY ANGLE 7 psi	20 psi	80 psi
1/8	●	●	●	●	0.5	1/32	3/64			.05	.06	.07	.09	.10	.12	.14	.16		58°	69°
	●	●	●	●	1	1/16	1/16			.10	.12	.14	.17	.20	.24	.28	.31		64°	76°
	●	●	●	●	2	5/64	5/64		.14	.20	.25	.28	.35	.40	.48	.56	.63	52°	61°	69°
	●	●	●	●	3	3/32	3/32		.21	.30	.37	.42	.52	.60	.73	.85	.95	52°	64°	77°
	●	●	●	●	5	1/8	1/8	.27	.35	.50	.61	.70	.86	1.0	1.2	1.4	1.6	56°	67°	76°
	●	●	●	●	8	5/32	5/32	.44	.57	.80	.98	1.1	1.4	1.6	2.0	2.3	2.5	56°	65°	70°
	●	●	●	●	10	11/64	11/64	.55	.71	1.0	1.2	1.4	1.7	2.0	2.5	2.8	3.2	55°	65°	72°
1/4	●	●	●	●	1	1/16	1/16			.10	.12	.14	.17	.20	.24	.28	.31		53°	67°
	●	●	●	●	2	5/64	5/64			.20	.25	.28	.35	.40	.48	.56	.63		62°	71°
	●	●	●	●	3	3/32	3/32		.21	.30	.37	.42	.52	.60	.73	.85	.95	51°	65°	78°
	●	●	●	●	5	9/64	9/64	.27	.35	.50	.61	.70	.86	1.0	1.2	1.4	1.6	63°	73°	79°
	●	●	●	●	8	5/32	5/32	.44	.56	.80	.98	1.1	1.4	1.6	2.0	2.3	2.5	61°	69°	73°
	●	●	●	●	10	3/16	11/64	.55	.71	1.0	1.2	1.4	1.7	2.0	2.5	2.8	3.2	63°	70°	74°
	●	●	●	●	15	15/64	13/64	.82	1.1	1.5	1.8	2.1	2.6	3.0	3.7	4.2	4.7	63°	71°	72°
3/8	●	●	●	●	5	9/64	1/8	.27	.35	.50	.61	.70	.86	1.0	1.2	1.4	1.6	64°	73°	79°
	●	●	●	●	8	11/64	5/32	.44	.56	.80	.98	1.1	1.4	1.6	2.0	2.3	2.5	62°	70°	74°
	●	●	●	●	10	13/64	11/64	.55	.72	1.0	1.2	1.4	1.7	2.0	2.4	2.8	3.1	64°	72°	75°
	●	●	●	●	15	15/64	7/32	.82	1.1	1.5	1.8	2.1	2.6	3.0	3.7	4.2	4.7	64°	72°	74°
	●	●	●	●	20	9/32	1/4	1.1	1.4	2.0	2.4	2.8	3.5	4.0	4.9	5.6	6.3	63°	70°	74°
	●	●	●	●	25	19/64	19/64	1.4	1.8	2.5	3.1	3.5	4.3	5.0	6.1	7.1	7.9	63°	70°	74°
	●	●	●	●	30	21/64	5/16	1.6	2.1	3.0	3.7	4.2	5.2	6.0	7.3	8.5	9.5	63°	70°	74°
	●		●		15-30.1	15/64	5/16	1.3	1.6	2.3	2.8	3.2	4.0	4.6	5.6	6.5	7.3	40°	50°	54°
	●		●		25-30.1	19/64	5/16	1.5	2.0	2.8	3.4	4.0	4.8	5.6	6.9	8.0	8.9	40°	47°	51°
	●		●		50-50.1	11/32	3/8	2.7	3.5	5.0	6.1	7.1	8.7	10.0	12.3	14.2	15.8	40°	47°	50°
	●		●		50-50.3	11/32	3/8	2.7	3.5	5.0	6.1	7.1	8.7	10.0	12.3	14.2	15.8	72°	76°	78°
1/2	●	●	●	●	25	3/8	1/4	1.4	1.8	2.5	3.1	3.5	4.3	5.0	6.1	7.1	7.9	63°	66°	71°
	●	●	●	●	30	3/8	19/64	1.6	2.1	3.0	3.7	4.2	5.2	6.0	7.3	8.5	9.5	67°	71°	75°
	●	●	●	●	40	3/8	23/64	2.2	2.8	4.0	4.9	5.7	6.9	8.0	9.8	11.3	12.6	72°	76°	78°
	●	●	●	●	50	3/8	7/16	2.7	3.5	5.0	6.1	7.1	8.5	10.0	12.3	14.2	15.8	74°	79°	82°
	●	●	●	●	60	3/8	33/64	3.3	4.3	6.0	7.3	8.5	10.4	12.0	14.7	17.0	19.0	77°	82°	86°
3/4	●	●	●	●	40	1/2	5/16	2.2	2.8	4.0	4.9	5.7	6.9	8.0	9.8	11.3	12.6	70°	73°	74°
	●	●	●	●	50	1/2	3/8	2.7	3.5	5.0	6.1	7.1	8.5	10.0	12.3	14.2	15.8	72°	75°	77°
	●	●	●	●	60	1/2	7/16	3.3	4.3	6.0	7.3	8.5	10.4	12.0	14.7	17.0	19.0	74°	76°	79°
	●	●	●	●	70	1/2	1/2	3.8	5.0	7.0	8.5	9.9	12.1	14.0	17.1	19.8	22.0	76°	79°	83°
	●	●	●	●	80	1/2	9/16	4.4	5.7	8.0	9.8	11.3	13.8	16.0	19.6	23.0	25.0	78°	82°	84°
	●	●	●	●	90	1/2	37/64	4.9	6.4	9.0	11.0	12.7	15.6	18.0	22.0	25.0	29.0	81°	84°	84°
	●	●	●	●	100	1/2	5/8	5.5	7.1	10.0	12.2	14.1	17.3	20.0	25.0	28.0	32.0	83°	86°	86°
	●	●	●	●	110	1/2	43/64	6.0	7.8	11.0	13.5	15.5	19.0	22.0	27.0	31.0	35.0	85°	88°	88°
	●	●	●	●	120	1/2	23/32	6.6	8.5	12.0	14.7	17.0	21.0	24.0	29.0	34.0	38.0	87°	90°	90°

Standard Materials			
●	●	●	●
●	●	●	●
●	●	●	●
●	●	●	●
●	●	●	

Material Code
no material code = Brass
I = Mild Steel
SS = 303 Stainless Steel
316SS = 316 Stainless Steel
PVC = Polyvinyl Chloride

INTERMEDIATE CAPACITIES—Caps are interchangeable for in-between capacities within each pipe size group... write for Data Sheets 3055, 3986 and 3987.
Spray Dimension Data... write for Data Sheets 15350 and 15362.

DIMENSIONS & WEIGHTS

Based on largest/heaviest version of each type.

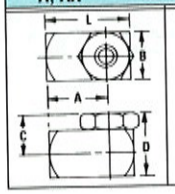

A, AX	A	B	C	D	L	Net Weight oz.
1/8 A, AX	11/16"	5/8"	15/32"	25/32"	1"	1½
1/4 A, AX	7/8"	3/4"	17/32"	29/32"	1¼"	2¾
3/8 A, AX	1 1/32"	7/8"	11/16"	1⅛"	1 15/32"	4¼
1/2 A, AX	1⅜"	1⅛"	27/32"	1 13/32"	1 15/16"	8¾
3/4 A, AX	1 9/16"	1¼"	15/16"	1 9/16"	2 3/16"	11
3/8 A-30.1	31/32"	3/4"	3/4"	1⅛"	1 11/32"	4
3/8 A-50.1	31/32"	3/4"	27/32"	1 7/32"	1 11/32"	3¾
3/8 A-50.3	31/32"	3/4"	11/16"	1 1/16"	1 11/32"	3¾

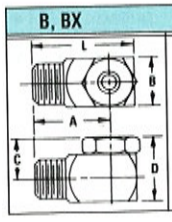

B, BX	A	B	C	D	L	Net Weight oz.
1/8 B, BX	7/8"	5/8"	15/32"	25/32"	1 3/16"	1½
1/4 B, BX	1"	3/4"	17/32"	29/32"	1⅜"	2½
3/8 B, BX	1⅛"	7/8"	11/16"	1⅛"	1 9/16"	4
1/2 B, BX	1⅜"	1⅛"	27/32"	1 13/32"	1 15/16"	7
3/4 B, BX	1 5/8"	1¼"	15/16"	1 9/16"	2¼"	10¾
3/8 B-30.1	1⅛"	3/4"	3/4"	1⅛"	1½"	3¾
3/8 B-50.1	1⅛"	3/4"	27/32"	1 7/32"	1½"	3½
3/8 B-50.3	1⅛"	3/4"	11/16"	1 1/16"	1½"	3½

ORDERING INFORMATION

STANDARD SPRAY NOZZLE

1/4 A - SS 10

- 1/4 — Inlet Connection Pipe Size
- A — Nozzle Type
- SS — Material Code
- 10 — Capacity Size

APPENDIX C

Water and Sediment Monitoring Program

V4, June 21 2013
Reference: 4419

Jurgen Franke, P.Eng.
Fraser Surrey Docks LLP
Director of Engineering & Maintenance
11060 Elevator Rd
Surrey, BC, V3V 2R7

Re: Proposed water and sediment quality monitoring programs for the operating temporary coal offloading facility at Fraser Surrey Docks (FSD), Surrey BC

1.0 Introduction

This document outlines a proposed operations phase water and sediment quality monitoring program for the temporary coal offloading facility at Fraser Surrey Docks, (FSD) in Surrey, BC.

2.0 Water quality monitoring

Storm water and dust suppression waters will typically be collected, treated and re-used in the system, although the offsite discharge of some treated water may be required during heavy rain events.

A water quality monitoring program will be used to confirm and evaluate the function of the onsite water collection and treatment system. A site-specific treatment system is under design and at a minimum, routine pH adjustment and solids removal are anticipated during operations. The design contemplates two discharge options, both under strict permit approval guidelines. Option A involves discharge to Metro Vancouver's Sanitary while Option B involves a discharge of treated runoff to the storm sewer system / Fraser River.

2.1 Pre-construction water quality sampling

In preparation for a discharge permit (Sanitary sewer or Storm sewer), pre-construction sampling followed by a water treatment system test will be needed; with analytical sampling reflective of Schedule 5 - Restricted Wastes, Greater Vancouver Sewerage and Drainage District (GVS&DD) Sanitary Sewer Use Bylaw 299. Sampling parameters will include:

- Biochemical Oxygen Demand (BOD)
- Oil & grease
- pH (*in situ* and analytical)
- Phenols (chlorinated / non-chlorinated)
- Sulphate
- Total and dissolved metals
- Total suspended solids (TSS)
- Volatile Organic Compounds (VOC)

2.2 Operational water quality monitoring

For Options A and B, a water quality monitoring program will be used to confirm and evaluate the function of the onsite water collection and treatment system. At a minimum, routine pH adjustment and solids removal (for a discharge to sanitary) are anticipated during operations. This will require some combination of a buffering agent to raise the pH and flocculent injection in association with tank storage to settle the suspended solids. We recommend a combination of field sampling (in-situ) and laboratory analyses be conducted on the treated discharge, with daily in-situ measurements of pH, conductivity and turbidity when the treatment system is running. These parameters can be measured in the field with hand held meters or using autosamplers, and can be used to quickly identify treatment system malfunction and / or maintenance needs. The monitoring data will be maintained in a database to evaluate system performance on an ongoing basis. Monthly confirmatory analytical samples of the treated discharge are also recommended - emphasizing pH, total suspended solids (TSS) and turbidity (Table 1).

Table 1. Monitoring program for Option A – discharge to sanitary sewer

Parameter	Frequency (in-situ)	Frequency (analytical)
conductivity	Daily	Monthly
pH	Daily	Monthly
turbidity	Daily	Monthly
TSS	-	Monthly

A provincial effluent discharge permit to the storm sewer / Fraser River (Option B) will specify the parameters and the frequency of sampling for each parameter in the treated discharge and the Fraser River receiving environment. The monitoring program would be developed in the context of anticipated discharge water quality, discharge volumes and the dilution capacity of the receiving environment.

3.0 Sediment quality monitoring

Given the dust and spill control measures proposed for the facility, coal is not expected to accumulate in abundance in the sediments at or around the FSD during operations. However, FSD is proposing a twice yearly sediment survey to collect samples for particle size analyses, total organic carbon (TOC) and % coal content. The following program is recommended:

- Samples will be collected twice annually, including once in September at the tail end of freshet and then once in February, the latter timeframe corresponding with some of the lowest average discharge rates at the closest non-tidal Water Survey of Canada station in the Fraser River (Fraser River at Agassiz-08MF035) for which more recent data are available (into the 1990s)
    - Samples collected in September will reflect sediment conditions after peak freshet in the river (June / July) and would provide a yearly, site-specific basis for comparison with the winter samples
    - The winter timeframe reflects a ≥6 month period after peak freshet and would be an optimal time for evaluating the highest potential coal particle accumulations in local sediments
- Surface sediment grab samples would be collected from 10 evenly distributed locations (following a grid pattern) at Berth 2 where the paired barges will be loaded
    - We recommend collecting a full set of samples prior *to* operations to describe the pre-project conditions in the barge loading area
    - The first set of *operational* samples are recommended for the February following the start of operations
    - Samples will be sent to CARO Analytical and the UBC Mining Laboratory for particle size analyses, % coal content and %TOC

These data would be used to track potential coal accumulations in the vicinity of the barge loading area throughout the operations phase of the project. Additional samples may be collected outside of the immediate barge loading areas depending on the results from samples collected at the 10 onsite locations during the operational phases.

4.0 Closing

If you have any questions, comments or concerns about this letter please contact the undersigned at 604-790-6915, 604-279-2093 or kgraf@triton-env.com

Karla Graf, PM
Bach. Env. Eng. Dip T RRM
Cert. Tech. Comm
Triton Environmental Consultants Ltd