2800 Commissioner Street Wharf
Stormwater Pollution Prevention Plan

Prepared for:
Western Canada Marine Response Corporation
201 Kensington Avenue
Burnaby, BC V5C 5P2

Prepared by:
Hemmera Envirochem Inc.
18th Floor, 4730 Kingsway
Burnaby, BC V5H 0C6

File: 1912-001.01
October 2016

HEMMERA

Hemmera Envirochem Inc.
18th Floor, 4730 Kingsway
Burnaby, BC V5H 0C6
T: 604.669.0424
F: 604.669.0430
hemmera.com

October 21, 2016
File: 1912-001.01

Western Canada Marine Response Corporation
201 Kensington Avenue
Burnaby, BC V5B 4B2

Attn: Jody Addah – Project Manager

Dear Jody,

Re: Stormwater Pollution Prevention Plan, Vancouver Harbour Response Base

Hemmera Envirochem Inc. is pleased to provide you with this final report.

We have appreciated the opportunity to work with you on this project and trust that this report meets your requirements. Please feel free to contact the undersigned by phone or email regarding any questions or further information that you may require.

Regards,
Hemmera Envirochem Inc.

Robin Taylor, MRM, EP
Senior Environmental Assessment Manager

Cc: Matt Mylemans, WCMRC

TABLE OF CONTENTS

List of Figures

List of Appendices

1.0 INTRODUCTION

Western Canada Marine Response Corporation (WCMRC) proposes to convert the former Prince Rupert Fisherman's Co-operative (wharf) located at 2800 Commissioner Street, Vancouver, BC to an Oil Spill Response Base (Project), as a means of increasing their operational spill response capacity in the Vancouver area. Key features of the proposed Project include two modular office buildings, parking for 20 vehicles, access ramp, and moorage. Moorage consists of an access float, mooring dolphin piles for barges, and a pedestrian access gangway connecting to an existing dock structure. The existing concrete dock structure will be retained.

Stormwater is water that originates from precipitation events (such as rainfall) and from snow and ice melt. Stormwater either ponds on the surface and eventually evaporates, infiltrates the ground, or flows over the ground surface as runoff, which ultimately enters nearby bodies of water. Stormwater runoff flows over land or impervious surfaces such as paved roadways, parking lots and building rooftops. As it flows, it may accumulate debris, soil and sediment, and contaminants that could negatively impact water quality.

The purpose of the Stormwater Pollution Prevention Plan (SPPP) is to develop a pollutant control strategy to minimize the discharge of pollutants by stormwater runoff from the Project site. Best Management Practices (BMPs) are those management practices which are considered sound, are relatively low in cost, and are applicable to a broad category of industries and types of pollutants. The BMPs discussed in this plan have been designed to improve the quality of stormwater discharged from the facility and to aid in the development, implementation and evaluation of the SPPP.

2.0 OVERVIEW

2.1 BACKGROUND

The site is at about 7 m above sea level just north of Commissioner Street and gently slopes to 4 m above sea level at the top of the shore protection adjacent to Burrard Inlet. The proposed Project includes the construction of a new response base with associated and related facilities. The proposed Project includes the following elements (Moffatt & Nichol, 2016) relevant to stormwater:

- Existing concrete wharf with an approximate footprint area of 1980 m2;
- Asphalt re‑surfacing on top of existing concrete wharf;
- Concrete abutment beam;
- Sewage pump out on float;
- In‑ground new sewage lift station;
- Water supply to office building and floats;
- Lock-block retaining wall along existing wharf to retain fill for parking area and
- New riprap shore protection along the foreshore, and;
- New pavement and storm water drainage for the parking area,

Drainage infrastructure for the site relevant to stormwater management includes a Stormcepter and an oil-water separator within the parking lot

2.2 LOCATION

The proposed Project would be built in Vancouver Harbour at 2800 Commissioner Street, approximately 350 m west of New Brighton Park, on the site of the old Prince Rupert Fishing Co-operative (**Figure 1**).

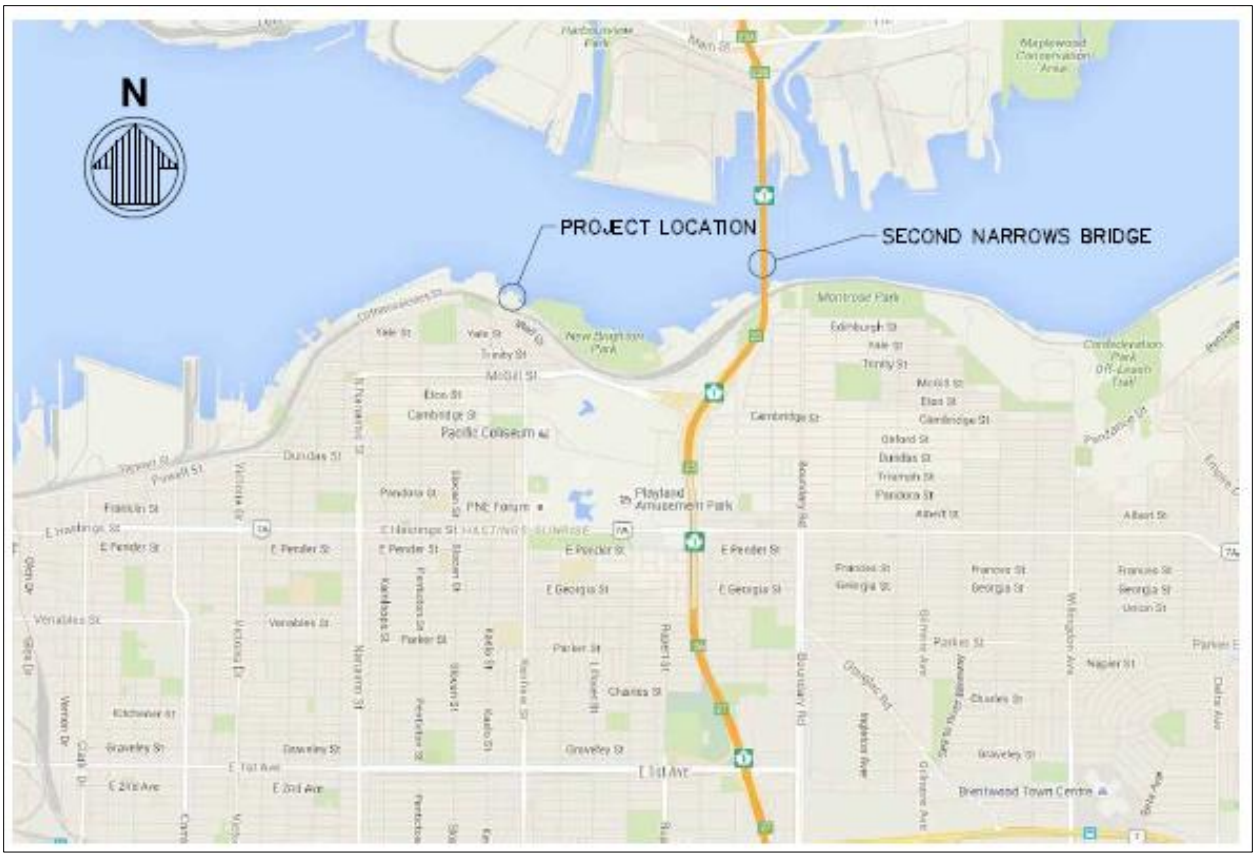

(source: Moffatt and Nichol, 2016)

Figure 1 Project Location

3.0 SITE INVENTORY

3.1 ACTIVITIES

During Project operations, the activities listed below that have the potential to expose stormwater runoff to contaminants:

- Waste disposal;
- Fueling of service vehicles;
- Routine servicing of equipment; and,
- Repair and maintenance activities.

Figure 2 shows a proposed overall site plan.

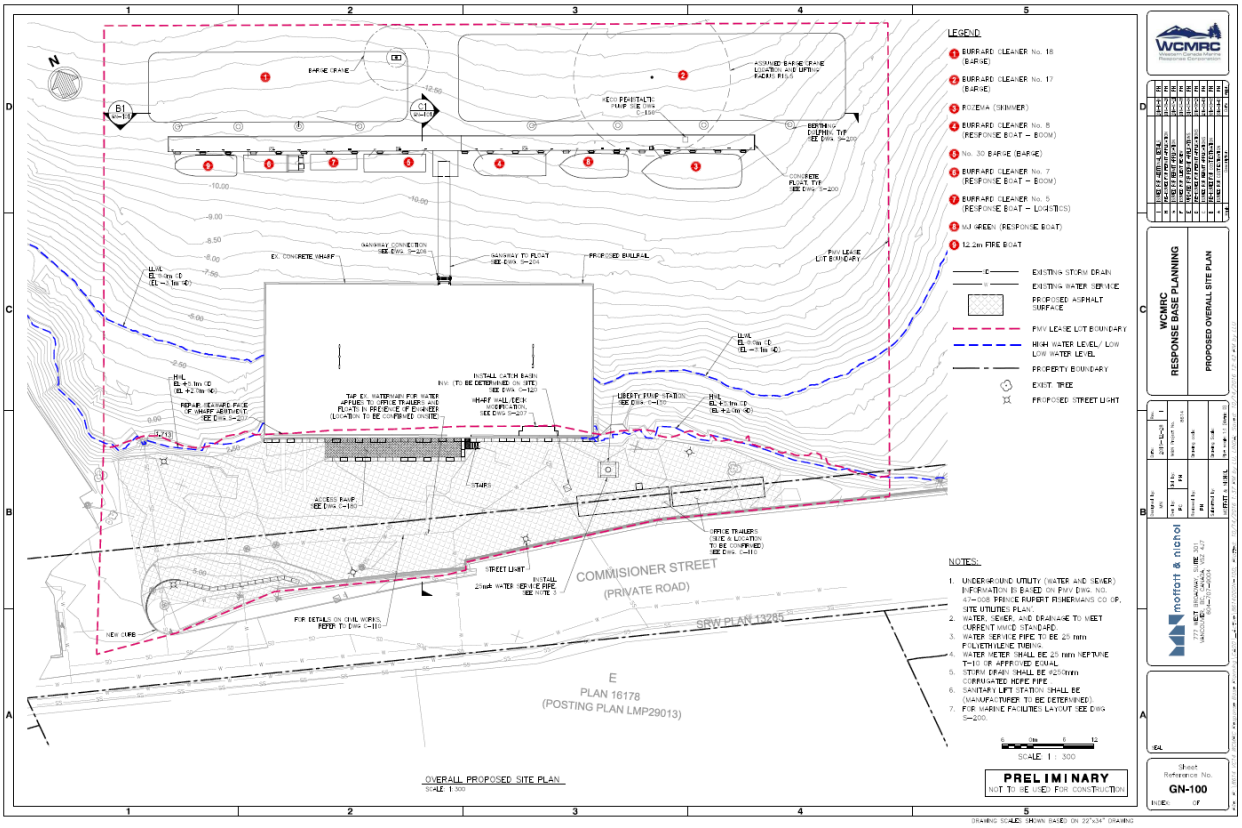

(source: Moffatt and Nichol, 2016)

Figure 2 Proposed Overall Site Plan

3.2 MATERIALS

Significant materials, as they relate to stormwater, include but are not limited to storage, cleaning, or waste products. The most likely materials the Project is expected to have located at the facility that may interact with stormwater include the following:

- Petroleum fuels (diesel and gasoline);
- Solid waste/garbage;
- Hydraulic and lubricating oils; and,
- Coolants and antifreeze such as ethylene glycol.

Note that handling of oiled or contaminated spill response materials will not be conducted at the response base. Cleaning of spill response equipment and handling of used spill response materials will occur off-site.

3.3 HYDROLOGICAL ASSESSMENT

Environmental loads have been calculated (Moffatt and Nichol 2016: Attachment 2 – Design Basin) and are as follows:

<u>Rainfall</u>

- 15 minutes - 10 mm
- One day - 112 mm
- Annual total - 1325 mm

<u>Ground Snow</u>

- Ss ground snow load 1 in 50 yr – 1.8 kPa
- Sr associated rain load 1 in 50 yr - 0.2 kPa

A hydrologic assessment was conducted for the final design of the site to estimate the runoff response, including peak flow rates and runoff volumes for various rainfall events. The design of the site stormwater management system will take into account the results of the hydrological assessment to ensure the stormwater infrastructure is appropriate for the site. The basic hydrological parameters used to model hydrological properties of the permanent design are as follows:

- Total Area – 3,550 m^2;
- Current design impervious –98%;
- Average slope – 1.0% to 2.5%;
- Time of concentration – Single discharge to the existing outfall is 2 minutes; and,
- Precipitation event – peak runoff rate is based on the 10 year, 24-hour storm with a rainfall intensity of 4.1 mm (City of Vancouver requirement for design of stormwater conveyance systems for contributing drainage areas less than 40 acres).

4.0 ISSUES IDENTIFICATION AND RISK ANALYSIS

4.1 APPLICABLE STANDARDS, ACTS AND REGULATIONS

The following relevant legislation and standards are applicable given the potential pollutant sources listed above:

- *Canada Fisheries Act* regarding the deposition of deleterious substance in waters frequented by fish.
- *Canada Shipping Act*, National Spill Response Protocol regarding the release of pollutants to the marine environment.
- *Canada Environmental Protection Act* regarding the management of harmful substances.
- *Canada Transportation of Dangerous Goods Act* – regarding the transportation of dangerous goods.
- Canadian Council of Ministers of the Environment (CCME) Guidelines relating to water quality standards.
- *B.C. Environmental Management Act,* regarding the unauthorized release of substances into the environment.
- *B.C. Environmental Management Act,* regarding the storage, handling, and disposal of hazardous materials and waste.

4.2 POTENTIAL POLLUTANT SOURCES

An assessment of the proposed Project operations was conducted to identify materials and practices which may reasonably be expected to add significant levels of pollutants to stormwater or which may result in the discharge of pollutants during dry weather from the storm sewer draining the facility parking lot. This section will provide a description of potential sources which may contribute to the presence of contaminants in stormwater runoff during operation.

The proposed Project has the potential to result in an increased influx of contaminants into the marine environment during its operational phase. The proposed increase in backshore asphalt-paved areas, including vehicle parking areas, would increase impermeable surfaces adjacent to the marine environment. This would increase the potential for storm water to discharge directly to the marine environment, carrying any of the contaminants which may have collected on the hard surface from parked vehicles or day to day upland operations:

- Fuel, oil or coolant from service vehicles could leak from the vehicle from damage, normal wear and tear or during maintenance.
- Fuel could be dripped or spilled from diesel or gasoline fuel tanks during the fueling of service vehicles, during the filling of the tanks or as a result of damage to the tanks.

- Hydraulic oil or lubricating oil could be spilled during maintenance activities, or from leaks in oil-filled equipment.
- Garbage could be spilled onto the ground during the disposal of solid waste into designated dumpsters.

Note that no handling of used spill response materials will be conducted at the response base. Cleaning of spill response equipment and handling of used spill response materials will occur off-site.

4.3 POTENTIAL SENSITIVE RECEPTORS

Burrard Inlet is the nearest fish-bearing waterbody and is located within the Project construction footprint. Waterbirds such as gulls, terns, ducks, grebes, herons, and cormorants may use shoreline areas within this section of the Burrard Inlet. No known occurrences of vertebrate or invertebrate species at risk are found within 1 km of Project site.

In general terms, the Project is situated in Planning Area 1: Burrard Inlet South Shore, an area designated as 'Port Terminal' as provided in the Port Metro Vancouver Land Use Plan (October 28, 2014). 'Port Terminal' areas are designated for a variety of light and heavy industrial activities

The stormwater design for the Project site has stormwater runoff directed into the parking lot catchbasin leading to the site oil-water separator then to a single outfall into Burrard Inlet. The implementation of this SPPP and associated mitigation measures will minimize harmful impacts from stormwater runoff to Burrard Inlet.

4.4 IDENTIFIED ISSUES

There will be no large tank-type bulk fuel storage on-site required for Project operations. All fueling of vessels will occur off-site. The storage area for small amounts of fuels, coolants hydraulic oils and lubricating oils used for maintenance purposes will be in a centralized location having secondary containment. Given that the potential source for the release of these pollutants into the environment will be primarily during maintenance operations (either planned or from equipment failure), operations crews conducting the maintenance will immediately clean up and report all spills in accordance with the site Spill Prevention and Emergency Response Plan. The risk for the introduction of chemical pollutants will be low with an effective implementation of the Spill Prevention and Emergency Response Plan.

4.5 IDENTIFIED POLLUTANT PATHWAYS

Pollutant pathways for the Site will be via the stormwater drainage system and overland sheet flow. Most of the site will be graded so that all rainfall and snow melt is directed to the Site's catch basin via Stormcepter and oily water separator to discharge to the single existing outfall at the northwest corner of the site. Approximately half of the wharf deck directs water towards Burrard Inlet.

A detailed site grading and drainage plan drawing, including the oil-water separator located at the inlet of the outfall is provided in **Appendix A** of this plan. Stormwater infrastructure already present on the site includes a sump hole, catch basin, and manhole. The existing catch basin and manhole will be relocated. Site drainage infrastructure will include the following:

- 600dia X 1000 catchbasin;
- Stormcepter STC-750 multi-inlet precast concrete to drain paved areas;
- Oily water separator;
- HDPE stormwater drain pipe; and,
- Connection to existing stormwater pipe.

The entire site is comprised of one sub-catchment with a single catchbasin, with stormwater released through a single discharge point near the northwest corner of the site as shown on Drawing C-120 in Appendix A of this report.

5.0 STORMWATER POLLUTION PREVENTION PLAN

5.1 MANAGEMENT STRATEGY

The Project's stormwater pollution prevention strategy for operations is to implement a set of best management practices to target the potential pollutant sources identified in **Section 4.2** of this plan. These practices will encompass prevention, containment/reduction and treatment.

5.1.1 Good Housekeeping

Maintenance of work areas which may contribute pollutants to stormwater will be the most effective management practice for this site. Good housekeeping practices are not only beneficial in terms of limiting exposure of materials to stormwater, but they also improve worker safety and often contribute to reducing losses of products thereby lowering operational or capital costs.

Good housekeeping will be practiced throughout the facility. All exposed areas of the facility are maintained in a clean and orderly manner. Trash and other waste products are removed from the site on a regular basis. Routine inspections are made to insure that good housekeeping is being practiced.

5.1.2 Preventive Maintenance

All machinery working in the nearshore must be in good working order. The Project will employ a preventive maintenance program that includes inspections, testing, maintenance, and repairs of facility equipment and systems whose failure could result in a non-stormwater discharge is in place at the facility.

5.1.3 Containment/Reduction

All machinery working in the nearshore must be free of contaminants. All hazardous material storage areas will be equipped with secondary containment to reduce the likelihood of stormwater to become contaminated by their contents. If the secondary containment accumulates stormwater, the water will be examined to ensure it is free of oil, foam or discoloration prior to being drained.

In areas where there is a likelihood of solid contaminants entering a waste water drain, the drain will be equipped with a screen to reduce the amount of solids allowed to enter the storm drain.

5.1.4 Spill Prevention and Response Procedures

Spill kits will be maintained in accessible locations on site. Spill prevention and emergency response procedures are outlined in the Spill Prevention and Emergency Response Plan.

5.1.5 Treatment

Stormwater effluent will pass through oil-water separator then via Stormcepter ST-750 multi-inlet prior to discharge. The Stormcepter is designed to remove sediment, total suspended solids, hydrocarbons and free oil from stormwater runoff. The ST-750 model is appropriately sized for the predicted storm events for the site and will further reduce the chance of discharging any sediment and oily contamination in the stormwater discharge. The manufacturer's specifications for the Stormcepter and oily water separator are provided in Appendix B of this Plan. The Stormcepter and oily water separator will be inspected regularly and cleaned, as required.

6.0 IMPLEMENTATION AND MONITORING

6.1 IMPLEMENTATION AND MONITORING

All operational site staff will receive training on the contents of this plan to ensure they are able to properly assess conditions and activities that could impact stormwater quality at the facility, and who can also evaluate the effectiveness of the management practices. The training will clearly indicate that it is the responsibility of all staff to be able to recognize ineffective stormwater BMPs and to report them to their supervisor and/or site management.

6.2 ADAPTIVE MANAGEMENT AND CONTINUOUS IMPROVEMENT

A key process in the effective implementation of the SPPP is the ability to change mitigation measures or actions as site conditions warrant to protect stormwater quality. This approach, generally termed as 'adaptive management', is a planned and systematic process for continuously improving environmental management practices by learning about their outcomes.

To ensure continuous improvement for the stormwater system, South Coast Response Base management will review the contents of this plan as required, as Site stormwater conditions warrant.

If current BMPs are not working effectively or additional mitigation efforts are needed, the a SPPP will be updated and issued.

7.0 CLOSURE

This Work was performed in accordance with Professional Services Agreement between Hemmera Envirochem Inc. (Hemmera) and Western Canada Marine Response Corporation (WCMRC or "Client"), dated March 21, 2016 (Contract). This Report has been prepared by Hemmera, for sole benefit and use by WCMRC and VFPA. In performing this Work, Hemmera has relied in good faith on information provided by others, and has assumed that the information provided by those individuals is both complete and accurate. This Work was performed to current industry standard practice for similar environmental work, within the relevant jurisdiction and same locale. The recommendations presented herein should be considered within the context of the scope of work and project terms of reference; further, the recommendations are time sensitive and are considered valid only at the time the Report was produced. The conclusions and recommendations contained in this Report are based upon the applicable guidelines, regulations, and legislation existing at the time the Report was produced; any changes in the regulatory regime may alter the conclusions and/or recommendations.

We sincerely appreciate the opportunity to have assisted you with this project and if there are any questions, please do not hesitate to contact the undersigned by phone at 604.669.0424.

Report prepared by:
Hemmera Envirochem Inc.

Tanya Hebron, BGS, MUrb. (Candidate)
Project Coordinator

Report peer reviewed by:
Hemmera Envirochem Inc.

Robin Taylor, MRM, EP, P.Biol.
Senior Environmental Assessment Manager

8.0 REFERENCES

Moffatt & Nichol. 2016. Class A Cost Estimate for site improvements to 2800 Commissioner Street. Final Memo, October 14, 2016. Prepared for Western Canada Marine Response Corporation.

Vancouver Fraser Port Authority (PMV). 2014. PMV Land Use Plan Designation Maps – Planning Area 1. Available at http://www.portvancouver.com/wp-content/uploads/2016/09/G2016-097pa01_reduced.pdf. Accessed October 2016.

APPENDIX A

Drawing C-120 Grading and Drainage Plan

Drawing C-121 Grading and Drainage Section

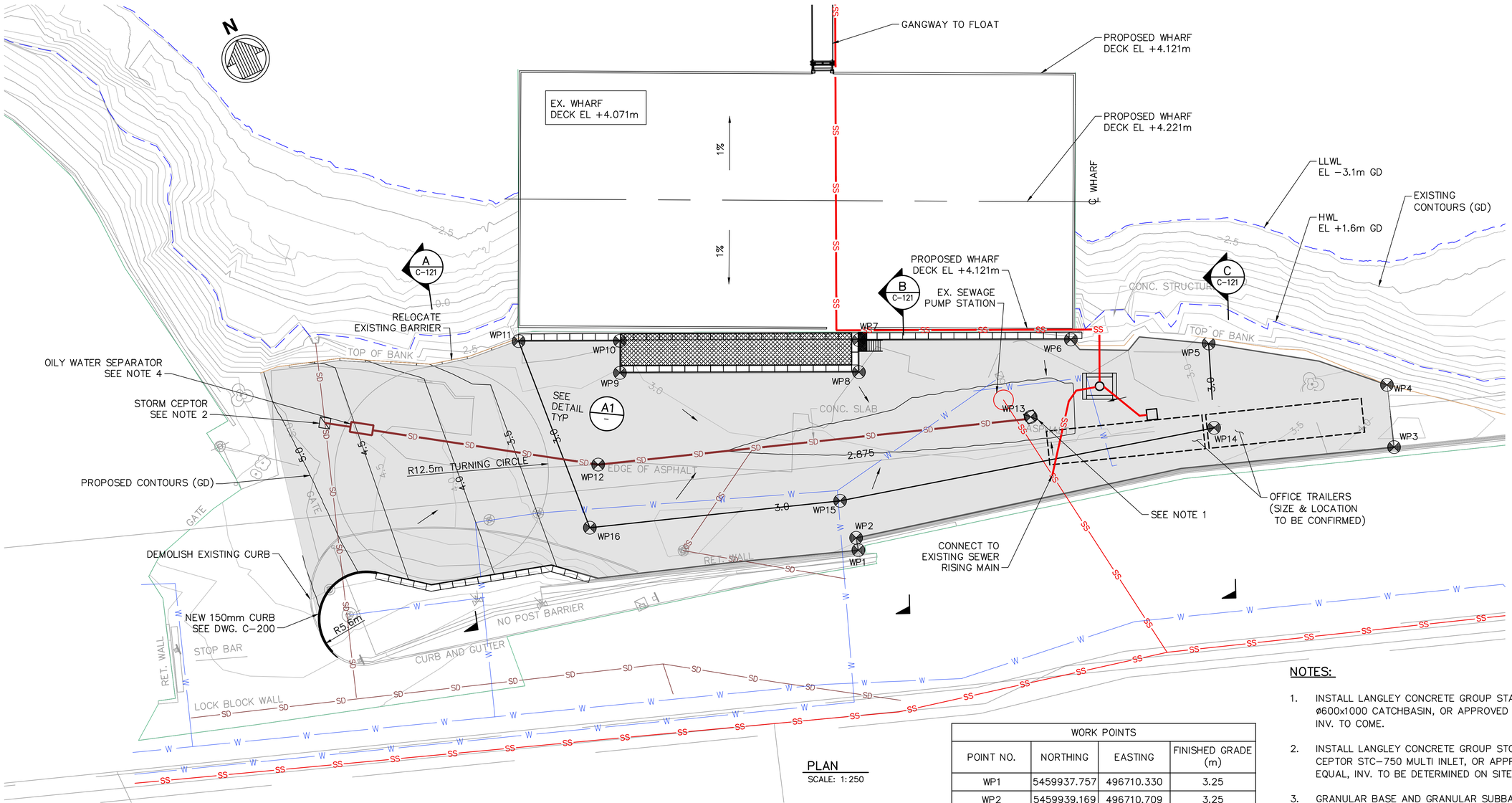

PLAN
SCALE: 1:250

NOTES:

1. INSTALL LANGLEY CONCRETE GROUP STANDARD ø600x1000 CATCHBASIN, OR APPROVED EQUAL, INV. TO COME.
2. INSTALL LANGLEY CONCRETE GROUP STORM CEPTOR STC−750 MULTI INLET, OR APPROVED EQUAL, INV. TO BE DETERMINED ON SITE.
3. GRANULAR BASE AND GRANULAR SUBBASE GRADATION SHALL CONFORM TO BC MOT SPECIFICATIONS.
4. INSTALL LANGLEY CONCRETE GROUP TYPE II OIL INTERCEPTOR API STYLE W/DUAL ACCESS, CONCRETE LID.

LEGEND:

- SS — PROPOSED SANITARY SEWER
- SD — PROPOSED STORM DRAIN
- W — EXISTING WATER SERVICE
- SS — EXISTING SANITARY SEWER
- SD — EXISTING STORM DRAIN
- ASPHALT
- EXIST. TREE

WORK POINTS

POINT NO.	NORTHING	EASTING	FINISHED GRADE (m)
WP1	5459937.757	496710.330	3.25
WP2	5459939.169	496710.709	3.25
WP3	5459921.965	496772.149	3.25
WP4	5459928.913	496774.495	3.25
WP5	5459942.164	496757.692	3.00
WP6	5459949.454	496743.307	3.00
WP7	5459959.945	496720.842	3.00
WP8	5459956.547	496719.255	3.00
WP9	5459968.373	496693.930	3.00
WP10	5459971.770	496695.517	3.00
WP11	5459976.783	496684.782	3.00
WP12	5459959.762	496687.051	2.90
WP13	5459943.268	496735.198	2.75
WP14	5459932.975	496754.062	3.00
WP15	5459943.883	496710.860	3.00
WP16	5459953.498	496683.034	3.00

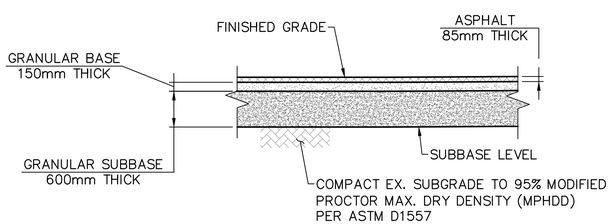

A1 — TYP PARKING LOT SECTION DETAIL
SCALE: 1:50 (SEE NOTE 3)

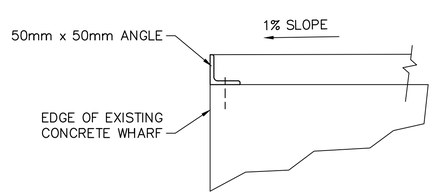

A2 — TYP SECTION – EDGE OF CONCRETE
SCALE: NTS

1.0 0m 1.0 2.0 — SCALE: 1 : 50

5 0m 5 10 — SCALE: 1 : 250

PRELIMINARY
NOT TO BE USED FOR CONSTRUCTION

WCMRC
Western Canada Marine Response Corporation

Mark	Description	Date	Appr.
F	RE-ISSUED FOR PERMIT APPLICATION	2016-10-14	PH
E	RE-ISSUED FOR PERMIT APPLICATION	2016-09-28	PH
D	ISSUED FOR PERMIT APPLICATION	2016-07-21	PH
C	ISSUED FOR CLIENT REVIEW	2016-07-08	PH
B	ISSUED FOR REVIEW	2016-06-24	PH
A	ISSUED FOR COST ESTIMATION	2016-06-12	PH

WCMRC
RESPONSE BASE PLANNING

GRADING AND DRAINAGE PLAN

Designed by: MT
Dwn by: LL
Ckd by: PH
Reviewed by: PH
Submitted by: MOFFATT & NICHOL
Date: 2015-12-22
M&N Project No: 8614
Drawing code:
Drawing Scale:
Plot scale: 1:1 (Metric D)
Rev. F

moffatt & nichol
777 WEST BROADWAY, SUITE 301
VANCOUVER, BC, CANADA, V5Z 4J7
604-707-9004

SEAL

Sheet Reference No.
C-120
INDEX: OF

DRAWING SCALES SHOWN BASED ON 22"x34" DRAWING

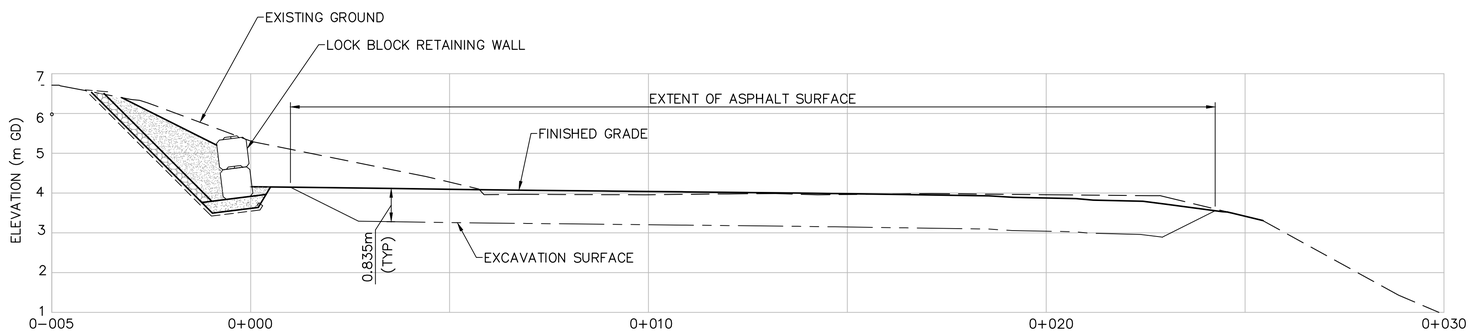

A C-120 SECTION
SCALE: 1:75

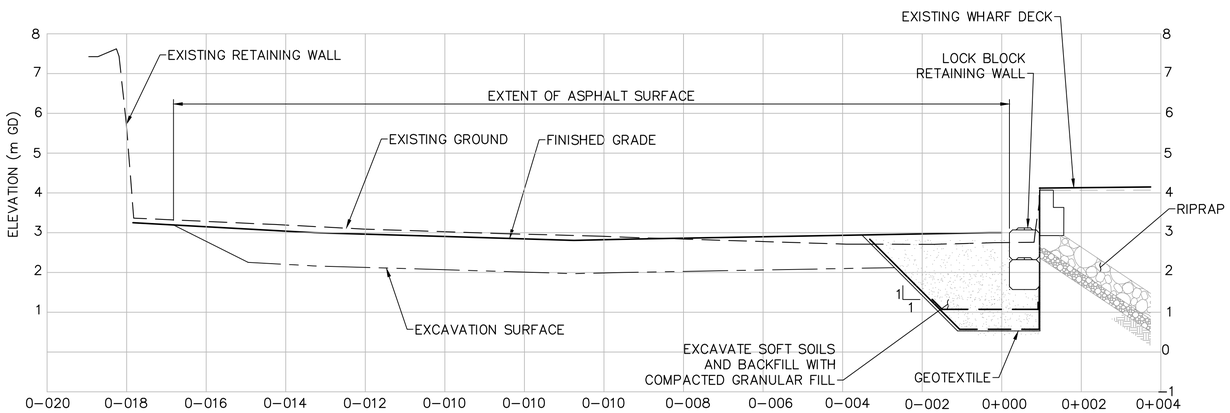

B C-120 SECTION
SCALE: 1:75

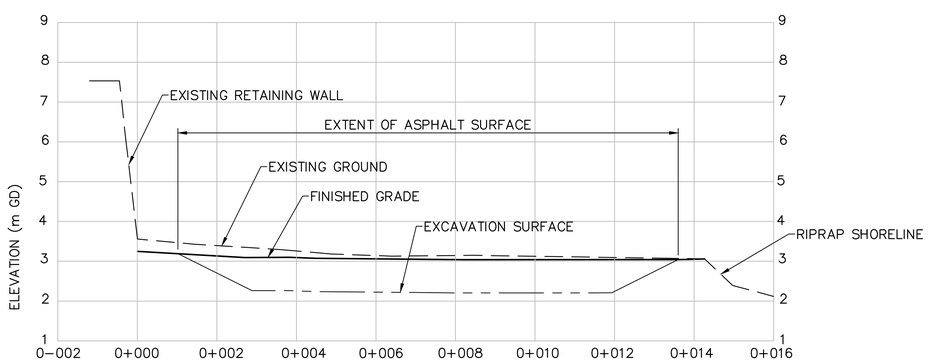

C C-120 SECTION
SCALE: 1:75

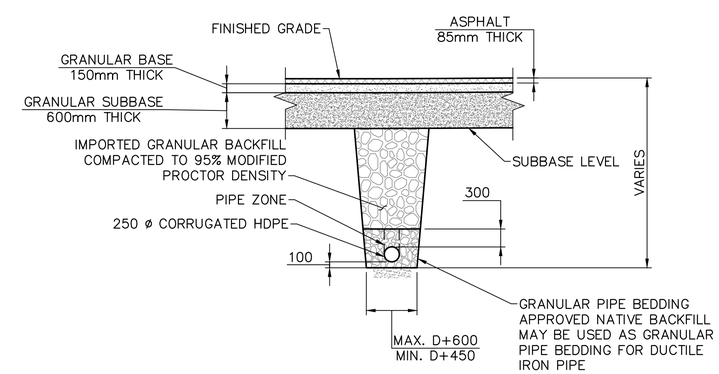

STORM DRAIN TRENCH TYPICAL
SCALE: 1:50

1.0 0m 1.0 2.0
SCALE: 1 : 50

1.5 0m 1.5 3.0
SCALE: 1 : 75

NOTES:

1. FOR GRADING PLAN, REFER TO DWG C-120.

PRELIMINARY
NOT TO BE USED FOR CONSTRUCTION

Mark	Description	Date	Appr.
D	RE-ISSUED FOR PERMIT APPLICATION	2016-10-14	PH
C	ISSUED FOR PERMIT APPLICATION	2016-07-21	PH
B	ISSUED FOR CLIENT REVIEW	2016-07-08	PH
A	ISSUED FOR REVIEW	2016-06-24	PH

ISSUED FOR ADDITIONAL DETAILS

WCMRC
Western Canada Marine Response Corporation

WCMRC RESPONSE BASE PLANNING

GRADING AND DRAINAGE - SECTIONS

Date: 2016-06-24
Rev. D
M&N Project No. 8614
Drawing code:
Drawing Scale:
Plot scale: 1:1 (Metric D)
Designed by: PH
Dwn by: PC
Ckd by: PH
Reviewed by: PH
Submitted by: MOFFATT & NICHOL

moffatt & nichol
777 WEST BROADWAY, SUITE 301
VANCOUVER, BC, CANADA, V5Z 4J7
604-707-9004

SEAL

Sheet Reference No.
C-121
INDEX: OF

File: P:\8614 VC14 WCMRC Response Base Planning\CADD_Active\861400C-121; Plotted: 10/14/2016 1:39 PM by LU, LINDA; Saved: 10/14/2016 1:32 PM by LU

DRAWING SCALES SHOWN BASED ON 22"x34" DRAWING

APPENDIX B

Manufacturer Specifications:

a. Stormcepter

b. Oily Water Separator

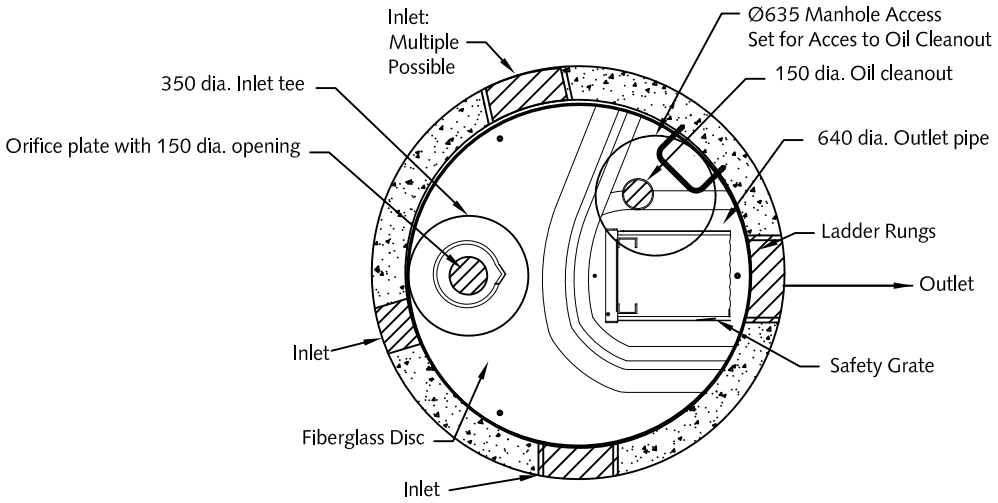

Plan View w/Pipe Orientation

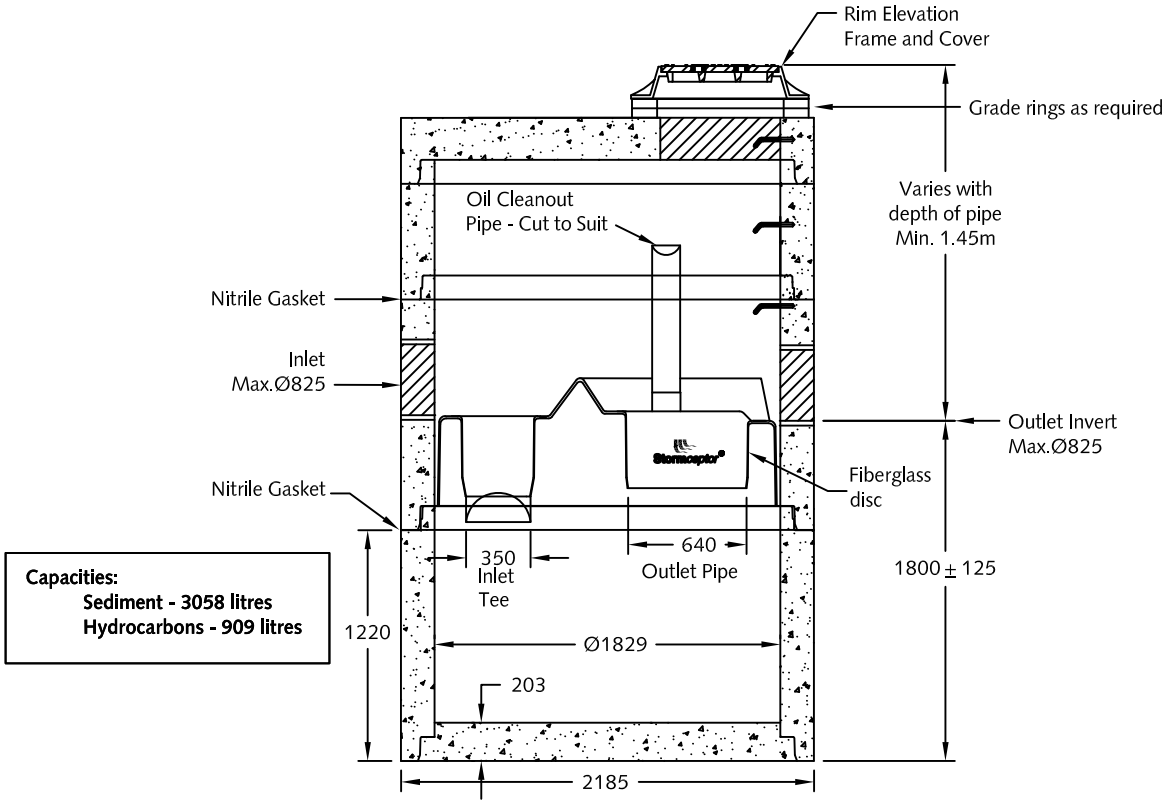

Section View w/Elevations

Notes:
1. STC 750 supplied in components to suit site elevations.
2. Ø1800mm manhole section w/insert to have inlet/outlet stubs/cores as required.
3. Base cast integral with lower section of manhole or provided as separate flat base.
4. For designs where pipe invert is < 0.8m below surface, contact sales office.
5. Design requires inlet invert 75mm higher than outlet.
6. Inlet pipes can be oriented up to 90 ° from outlet, depending on pipe size/type.
7. Multiple inlet pipes can be utilized (depending on pipe size/type) up to 180° apart.
8. Lid supplied w/Ø635mm access designed to HS-25 live loading.
9. Ladder rungs supplied at 300mm spacing as shown.
10. Manhole manufactured to ASTM C478 specifications.
11. Lifting inserts supplied in manhole sections.
12. Approx. weight:
    1840x1220 manhole section with integral base: 5900kgs. [12,980 lbs.]
13. Type GU Cement; min. concrete strength: 27.5MPa.
14. Stormceptor protected by Canadian Patent # 2009208, 2137942, 2175277, 2180305.

THE Langley CONCRETE GROUP
The LANGLEY CONCRETE Group of Companies

DESCRIPTION:

Stormceptor STC-750
Multi Inlet Design

www.langleyconcretegroup.com

DRAWN BY:	JAO	**ORIGIN:**	CHWK
SCALE:	1:40	**DRAWING NO:**	
DATE:	May/04/2010		STC750-MULTI

LANGLEY (604)533-1656 VICTORIA (250) 478-9581 CHILLIWACK 1-800-667-9600

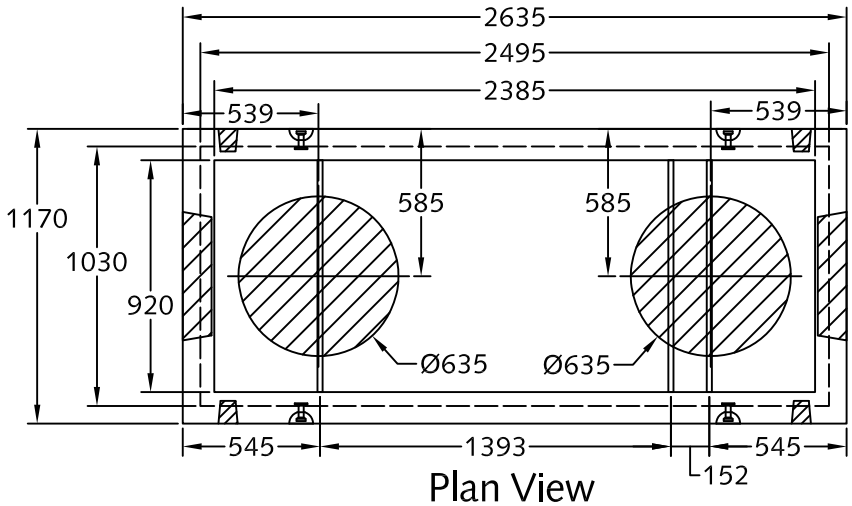

Plan View

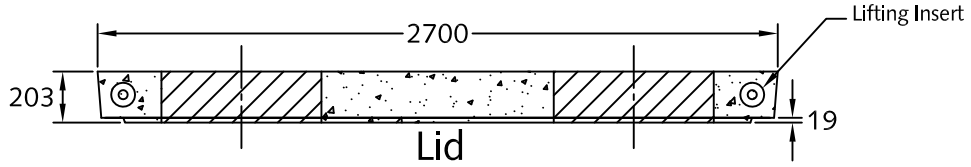

Lid

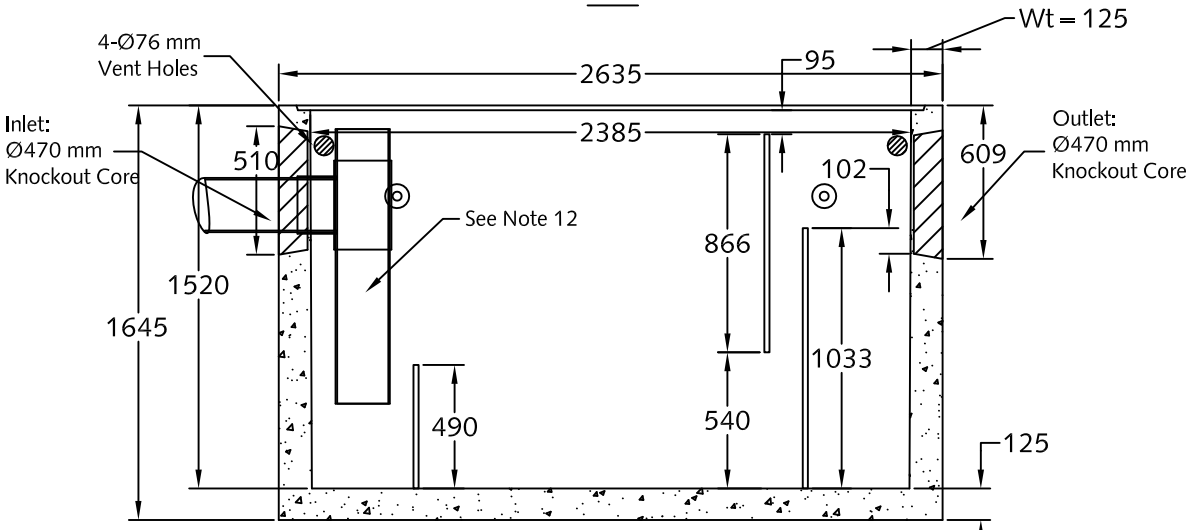

Section View

Notes:

1. Type II Oil interceptor [API Style] manufactured to meet AASHTO HS20 live loading.
2. Unit dimensions are 2.38 x 0.92 x 1.52 m.
3. Reinforced concrete lid manufactured for AASHTO HS20 live loading.
4. Unit c/w Ø470 mm knockout cores for inlet/outlets as shown.
5. Unit risers available in heights: 300, 450 etc. to 1050 mm maximum.
6. Unit c/w 2-Ø635 mm opening for accesses as shown.
7. Unit supplied w/ 4-Ø76 mm vent holes as shown.
8. Oil interceptor c/w 12 gauge galvanized baffles as shown.
9. Unit has a maximum 2,000 liter [2.0 m³] capacity.
10. Unit c/w 5T lifting inserts as shown.
11. Unit c/w ladder rungs upon request.
12. PVC required by design, installed by others in field.
13. Design can be modified for specific application, please contact LCG sales office.
14. Approximate weight:
    - Lid: 1,350 kg.
    - Chamber: 4,220 kg.
15. Minimum rebar yield strength: 414 MPa.
16. Minimum concrete strength: 35 MPa.
17. All dimensions are in millimeters.

THE Langley CONCRETE GROUP — The LANGLEY CONCRETE Group of Companies	DESCRIPTION: TYPE II Oil Interceptor [API] w/ Dual Access Concrete Lid www.langleyconcretegroup.com	DRAWN BY: KS	ORIGIN: CHWK
		CHK BY: JDB/SW/JAO	DWG NO: TYPE II-API-1.0
		DATE: DEC/04/2009	REV DATE: 4. NOV/01/2010
		SCALE: 1:30	

LANGLEY (604) 533-1656 VICTORIA (250) 478-9581 CHILLIWACK 1-800 667-9600